United States Patent [19]

Kucherer

[11] **3,749,917**

[45] **July 31, 1973**

[54] **DEVICE FOR ENCAPSULATING A RADIOACTIVE RESIN-WATER SLURRY**

[76] Inventor: **Harvey D. Kucherer,** 1321 Foxwood Dr., Monroeville, Pa. 15146

[22] Filed: **May 12, 1971**

[21] Appl. No.: **142,788**

Related U.S. Application Data

[63] Continuation-in-part of Ser. No. 792,282, Jan. 21, 1969, abandoned.

[52] **U.S. Cl.** ..... **250/108 R,** 250/106 S, 250/108 FS

[51] **Int. Cl.** **G21f 9/16,** G21f 9/22

[58] **Field of Search** ..... 250/106 S, 108 WS, 250/108 FS, 108 R; 106/100; 252/301.3

[56] **References Cited**

UNITED STATES PATENTS

2,918,717	12/1959	Struxness et al.	250/108 WS
3,361,649	1/1968	Karter	252/301.1 WS
3,432,666	3/1969	Nash et al.	250/108 R

OTHER PUBLICATIONS

Barbour et al.: A. E. Board Report P.E.L. 102; Atomic Energy Board of Republic of South Africa; pages 1–8; Sec. 1965.

Primary Examiner—James W. Lawrence

Attorney—A. T. Stratton, Z. L. Dermer and M. B. L. Hepps

[57] **ABSTRACT**

A device and process wherein a metallic drum is lined with a layer of cement and vermiculite and evacuated. An injection header is fitted to and extends into the hollow interior of the lined drum to permit access of radioactive waste comprising a resin-water slurry. The hollow interior of the drum may fill with resins while the cement-vermiculite layer uniformly absorbs the water therefrom.

3 Claims, 1 Drawing Figure

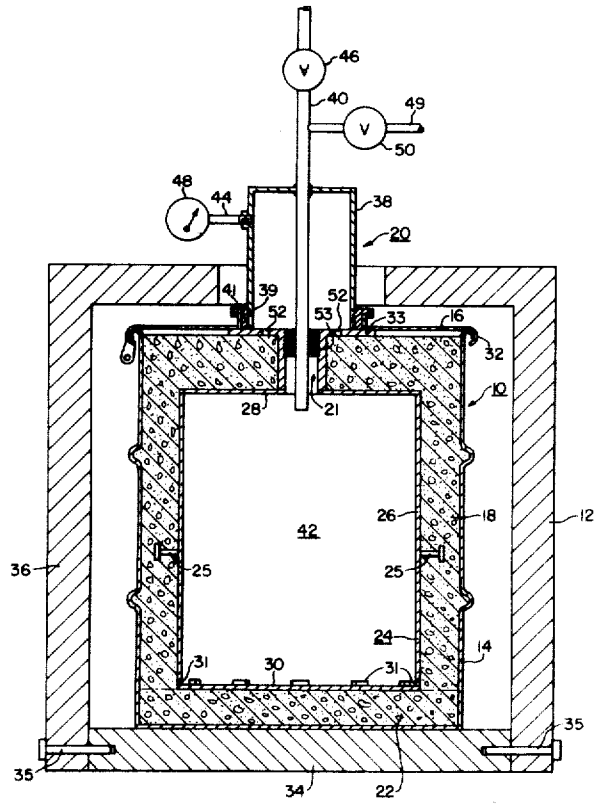

PATENTED JUL 31 1973

3,749,917

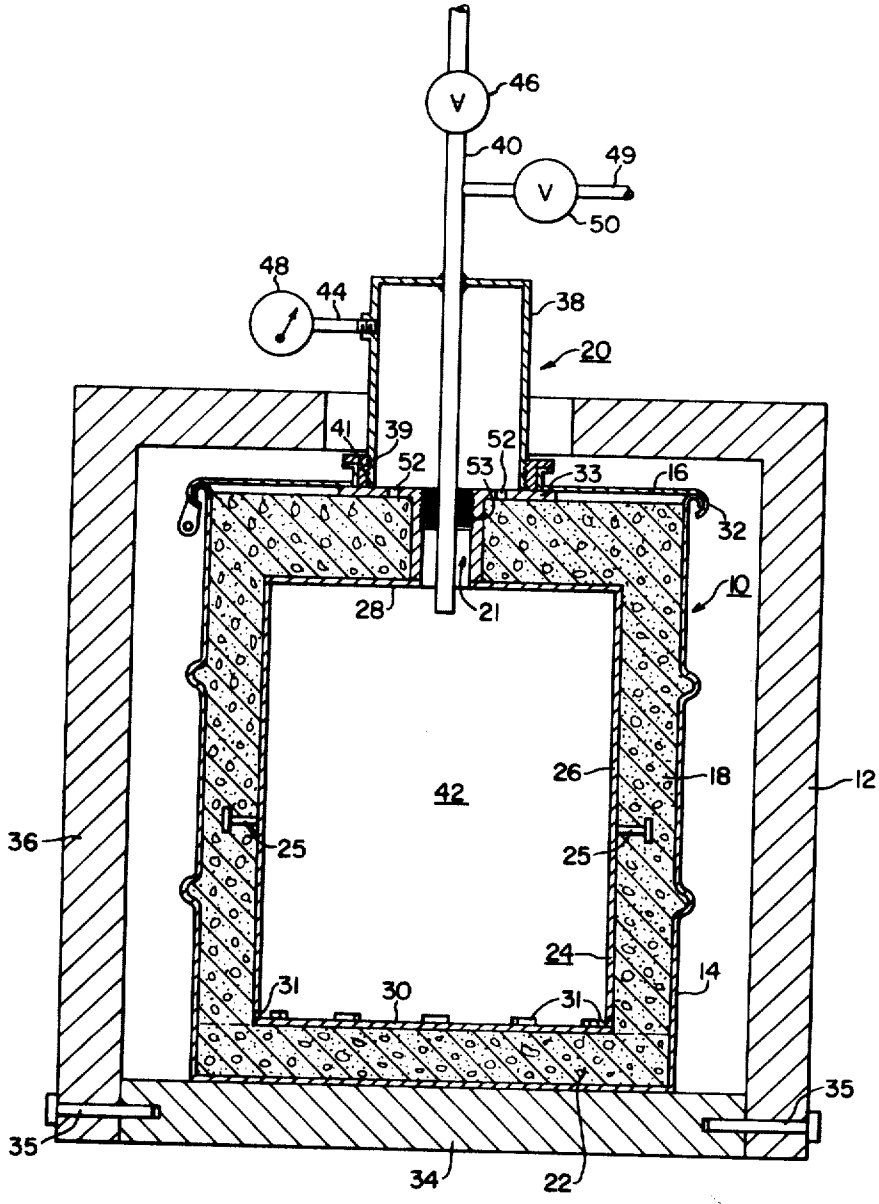

WITNESSES

Theodore F. Wrobel

James T. Young

INVENTOR

Harvey D. Kucherer

BY M.B.L. Hoare

ATTORNEY

DEVICE FOR ENCAPSULATING A RADIOACTIVE RESIN-WATER SLURRY

This is a continuation of application Ser. No. 792,282, now abandoned.

BACKGROUND OF THE INVENTION

This invention relates to a device and process for the encapsulation of radioactive waste, and more particularly to prepared containers for receiving radioactive resin-water slurries.

The presently preferred technique for packaging radioactive waste materials, particularly those involving resin-water slurries, comprises centrifuging the slurry to dewater the resinous material, mixing the resins with cement in a cement mixer, and allowing this mixture to harden in a drum. The water from the slurry is generally poured into a prepared drum of cement mixed with vermiculite.

In certain reports, i.e. Report P.E.L. 102 issued by the Atomic Energy Board of The Republic of South Africa, it is suggested that the water receiving drum containing the cement-vermiculite mixture be evacuated prior to water ingress. This report indicates that the evacuated mixture absorbs more water, more uniformly, and without wet spots, i.e., areas where the cement is not entirely solidified due to the presence of an excess amount of water.

It should be apparent that present practices involve multiple processes such as dewatering and separate handling of the water and the solid materials, and involves the use of much equipment which is rendered radioactive such as a centrifuge and cement mixer. The above technique further involves substantial expense and some danger to operating personnel.

It is accordingly the object of this invention to encapsulate radioactive resin-water slurries directly thus simplifying the procedure and eliminating much equipment, and to produce a superior encapsulated package.

SUMMARY OF THE INVENTION

The direct encapsulation of a radioactive resin-water slurry created for example from mixed bed ion exchanger resins in nuclear power plants is facilitated by providing an evacuated metallic drum which is completely lined with cement on a cement-vermiculite mixture and which includes an injection header or conduit allowing ingress of the slurry to the hollow interior of the container.

A drum is first prepared by placing a layer of cement or cement and vermiculite on its bottom. A cylindrical retainer assembly is then inserted such that an annular layer and a top layer of cement or cement-vermiculite can be poured. Subsequently the conductor injection header extending into the interior of the layers is fitted to the drum and to the lid thereof.

The drum is then evacuated so that air does not inhibit the ingress of the slurry and such that the vacuum produced aids in the uniform dewatering of the resin-water slurry.

Once the resin-water slurry has entered the chamber formed by the cement mixture, the water is drawn into and uniformly dispersed within the mixture. The chamber therefore is substantially free of water and its entire volume may be utilized to store resinous material.

DESCRIPTION OF THE DRAWINGS

For a better understanding of the invention reference may be had to the accompanying drawing which shows a container surrounded by a shield and prepared for encapsulating a resin-water slurry.

DESCRIPTION OF THE PREFERRED EMBODIMENT

Referring to the drawing, there is shown an encapsulation container **10**, in accordance with this invention, surrounded by a shield **12** which may be of lead filled steel, as is known in this art. The container **10** essentially comprises: a drum **14** sealed by a lid **16**, both of which may be suitably made of carbon steel; a liner **18** of cement or of a mixture of cement and vermiculite; and an injection header or conduit **20**.

The container **10** is preferably prepared as follows:

A mix is prepared which suitably consists of any of the common forms of cement; either alone, or preferably in combination with vermiculite.

A bottom layer **22** of mix is placed in the drum **14**. An inner retainer **24** which has an injection coupling **21** fitted thereto is then situated centrally within the drum **14** and is supported on the bottom layer **22**. The inner retainer **24** preferably includes a cylindrical side portion **26** and a top **28** and a bottom **30**. A plurality of openings **31** are provided in the cylindrical side portion **26** for egress of liquid. The openings **31** are preferably at the bottom of the retainer **24**. The remaining volume of the drum **14** exterior to the retainer **24** is filled with the mix. Pins **25** may be provided to aid in maintaining the position of the retainer **24**. The drum lid **16** may then be installed and locked to the drum **14** with a common bolted closing ring **32**. The lid **16** should have its center contacting and supported by a flange **33** on the injection coupling **21**.

When a sufficient amount of radioactive resin-water slurry has been accumulated to fill a container **10**, the container **10** is placed within the shield **12**. The shield **12** may be most conveniently utilized when comprising two sections; a drum support section **34** and a sleeve section **36** which can be releasably locked to the support section **34**, as by pins **35**. The injection header **20** is then fitted to the container **10**.

The injection header **20** comprises a vacuum header **38** which is open and externally threaded at its bottom, as indicated by the numeral **39**, and sealed at its top to a resin-water slurry injection pipe **40**, as by welding. The external threads **39** are arranged to engage with threads **41** on the drum lid **16**. The pipe **40** extends through the injection coupling **21** into the chamber **42** formed by the liner **18**. A vacuum test line **44** is also fitted to the vacuum header **38**. The slurry injection pipe **40** has a valve **46** fitted therein, and the vacuum line **44** has a vacuum gauge **48** fitted thereto. The pipe **40** extends to a resin-water slurry hold-up tank (not shown). A vacuum conduit **49** which is connected to vacuum pump (not shown) and which contains a valve **50** is connected to pipe **40** above the vacuum header **38**.

To operate the composite structure, valve **46** is closed and valve **50** is opened and the vacuum pump is utilized to evacuate the drum **14** for example 7½ to 9 psia for a 30 gallon drum with a 3 inch liner **18**. Holes **52** are provided in the flange **33** to assure communication between the evacuated liner **18** and the vacuum header **38**. Valve **50** is then closed and valve **46** opened to admit the resin-water slurry to the interior of drum **14**.

The resin-water slurry entering through pipe **40** extending a short distance into chamber **42** is prohibited from eroding the bottom layer **22** of the liner **18** by the bottom portion **30** of the retainer **24.** The resins accumulate within central chamber **42.** The water passes through the holes **31** in the inner retainer **24** and is drawn into the liner **18.** The water substantially uniformly wets the entire liner **18** since the vacuum constantly causes the liquid to migrate from relatively "filled" regions to "unfilled" regions, i.e., those still possessing a relatively low pressure due to evacuation. The liner **18** subsequently hardens chemically. Valve **46** is closed when the container **10** is completely full. The "full state" may be ascertained by noting when the vacuum gauge **48** has returned to atmospheric pressure, i.e., when the vacuum gauge **48** has returned to approximately 15 psia.

The filling process may be automated by utilizing a vacuum switch (not shown) to operate the valves **46** and **50.** In operation, the switch would keep valve **46** closed and valve **50** opened until a vacuum of 7½ to 9 psia, for example, is reached. Valve **50** would then be closed and valve **46** opened until sufficient slurry had entered to substantially eliminate the vacuum at which time valve **46** would be closed.

Although the preferred embodiment includes an essentially solid retainer **24** with a single ring of openings **31** proximate its bottom, the retainer may include several rings of opening **31,** or may simply consist of a wire screen cage. The essential feature is that the retainer **24** allows egress of liquid from the chamber **42** without allowing resins to pass therethrough.

The injection coupling **21** should include internal threads **53.** It will be recalled that the lid **16** also has threads **41.** When the injection header **20** is removed, threaded plugs (not shown) should be inserted so as to engage threads **53** and **41** thus forming a double seal to egress of resins.

While there has been shown and described what is considered to be the preferred embodiment of the invention, modifications thereto will occur to those skilled in the art. The container **10** could also be utilized for slurries which has little or no resin content simply by reducing the size of chamber **42** and optionally filling chamber **42** with vermiculite. Accordingly, it is not desired that the invention be limited to the specific arrangement described but rather that the true scope of the invention be delineated in the appended claims.

What is claimed is:

1. Apparatus for encapsulating a radioactive resin-water waste slurry of the type removed from nuclear reactor power plants comprising:

an outer container made of a material which functions as a radioactive shield;

a drum having a closable lid in said outer container;

a dry mixture of construction cement and vermiculite in the base of said drum;

a closed inner container in said drum, said inner container being of the same configuration as the drum but of a size substantially less than said drum and having the space between the drum and inner container walls filled with said mixture;

said mixture further including a layer overlying the top of said inner container;

means in said inner container establishing communication between said container and the mixture in said space;

means extending from the inner container through the overlying layer and the drum lid which defines an opening;

a pipe extending through said opening and terminating at one end in said inner container and arranged at its other end to be selectively connected to a resin-water slurry source and to a vacuum pump, and valves between said slurry source and pump and said pipe respectively;

whereby upon evacuating said inner container of air, the resin-water slurry is caused to flow into the inner container, the water therein gravitating through the means in the container into contact with said mixture in the space which later forms a solid mass while the solid particles in the slurry remain in the container.

2. The apparatus according to claim **1** wherein the means establishing communication with the mixture in said space comprises multiple openings in the base of said inner container for permitting egress of liquid into contact with said mixture in the space.

3. The apparatus according to claim **1** wherein the means defining the opening in the overlying mixture layer comprises a cylindrical injection coupling having threads on its upper end for receiving a plug used to seal the resin-slurry mixture in said drum and container; and

a vacuum header coupled to said lid and overlying said opening, and wherein said pipe extends through the vacuum header and said opening.

* * * * *