Dec. 13, 1938. J. STARZICZNY 2,140,175

ROTARY BOILER AND HEAT-EXCHANGING APPARATUS

Filed Jan. 21, 1936 4 Sheets-Sheet 1

Fig. 1.

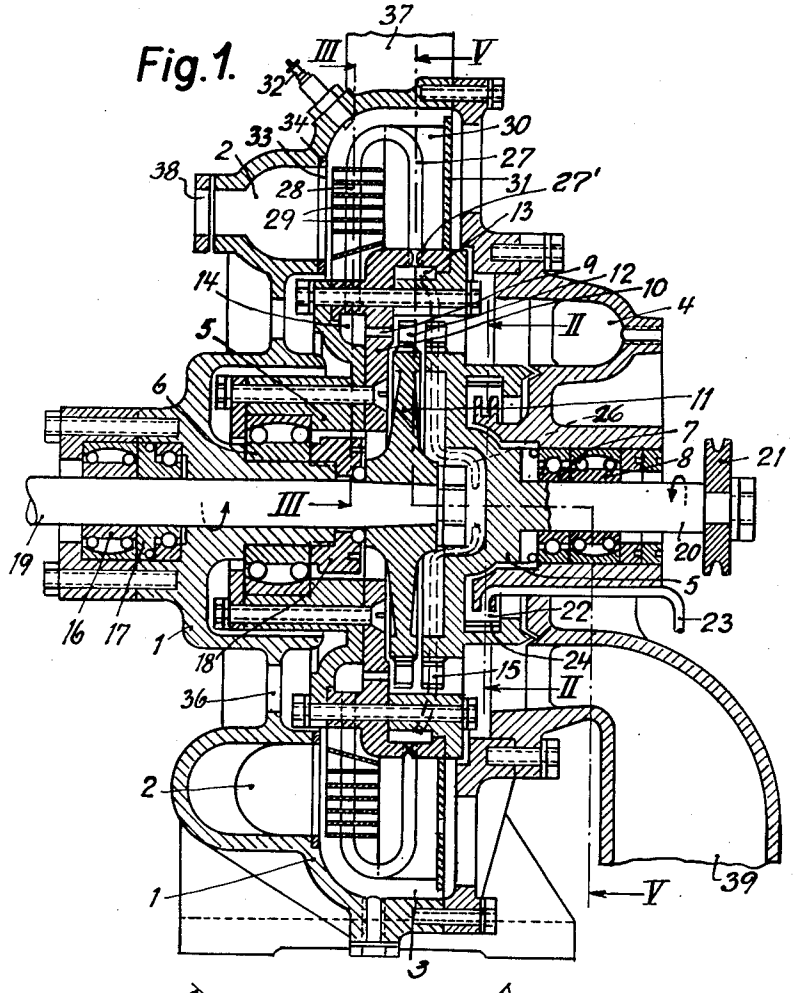

Fig. 2.

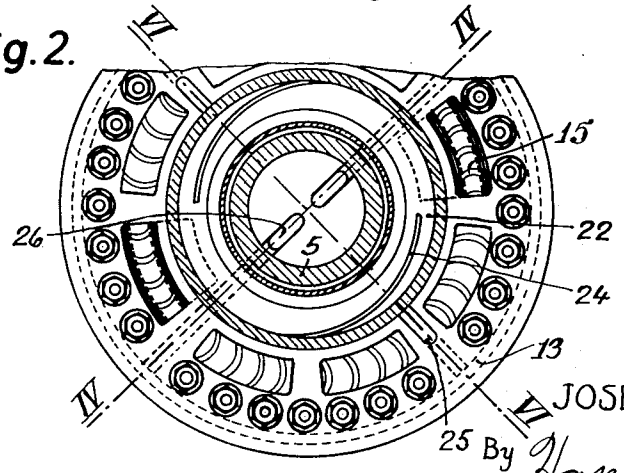

Inventor
JOSEF STARZICZNY
By Haseltine Lake & Co
Attorneys

Dec. 13, 1938. J. STARZICZNY 2,140,175

ROTARY BOILER AND HEAT-EXCHANGING APPARATUS

Filed Jan. 21, 1936 4 Sheets-Sheet 2

Fig.3.

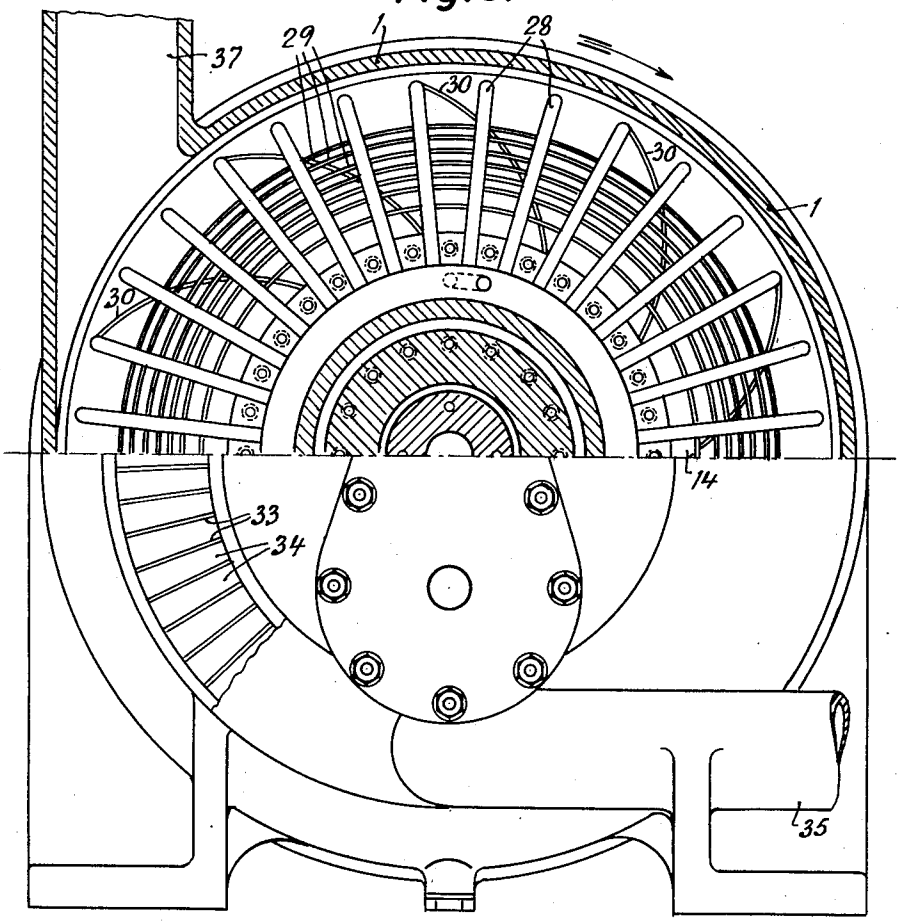

Fig.4.

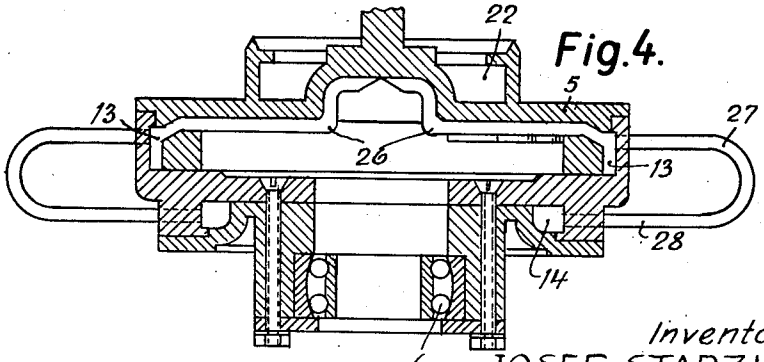

Inventor
JOSEF STARZICZNY
By Haseltine, Lake & Co.
Attorneys

Dec. 13, 1938. J. STARZICZNY 2,140,175

ROTARY BOILER AND HEAT-EXCHANGING APPARATUS

Filed Jan. 21, 1936 4 Sheets-Sheet 3

Fig. 5.

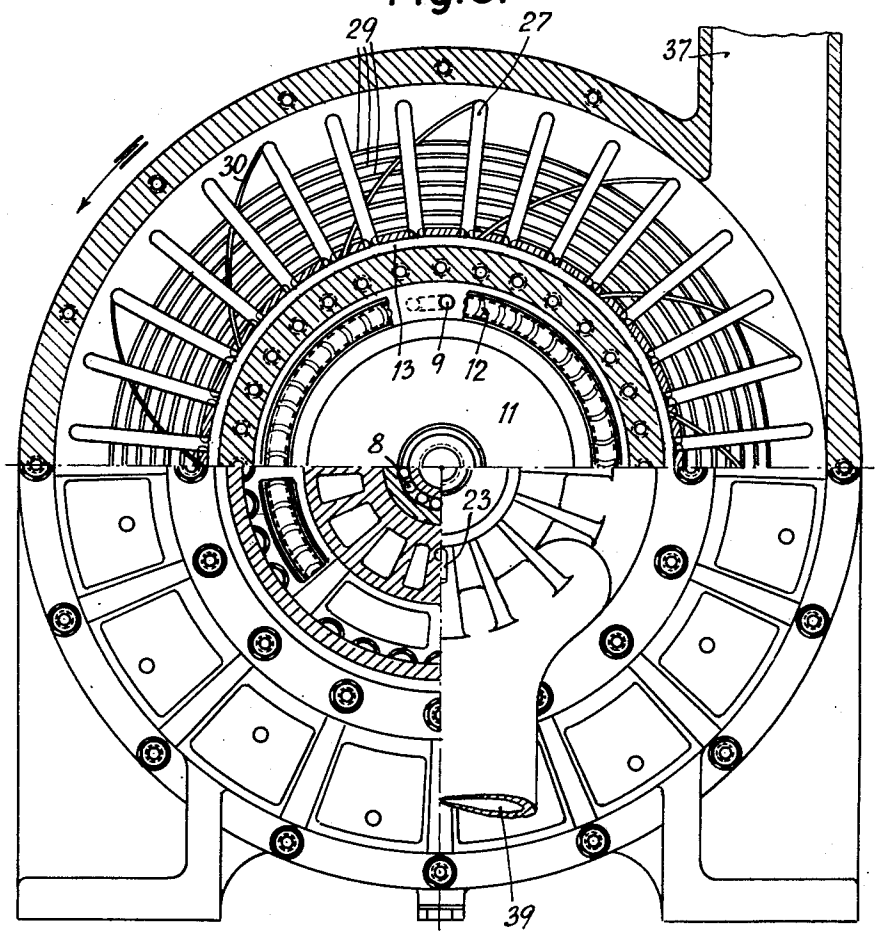

Fig. 6.

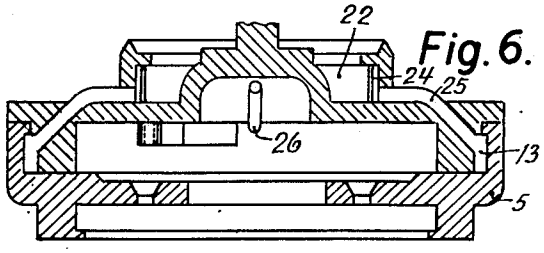

Inventor
JOSEF STARZICZNY
By Haseltine, Lake & Co.
Attorneys

Dec. 13, 1938. J. STARZICZNY 2,140,175

ROTARY BOILER AND HEAT-EXCHANGING APPARATUS

Filed Jan. 21, 1936 4 Sheets-Sheet 4

Fig. 7.

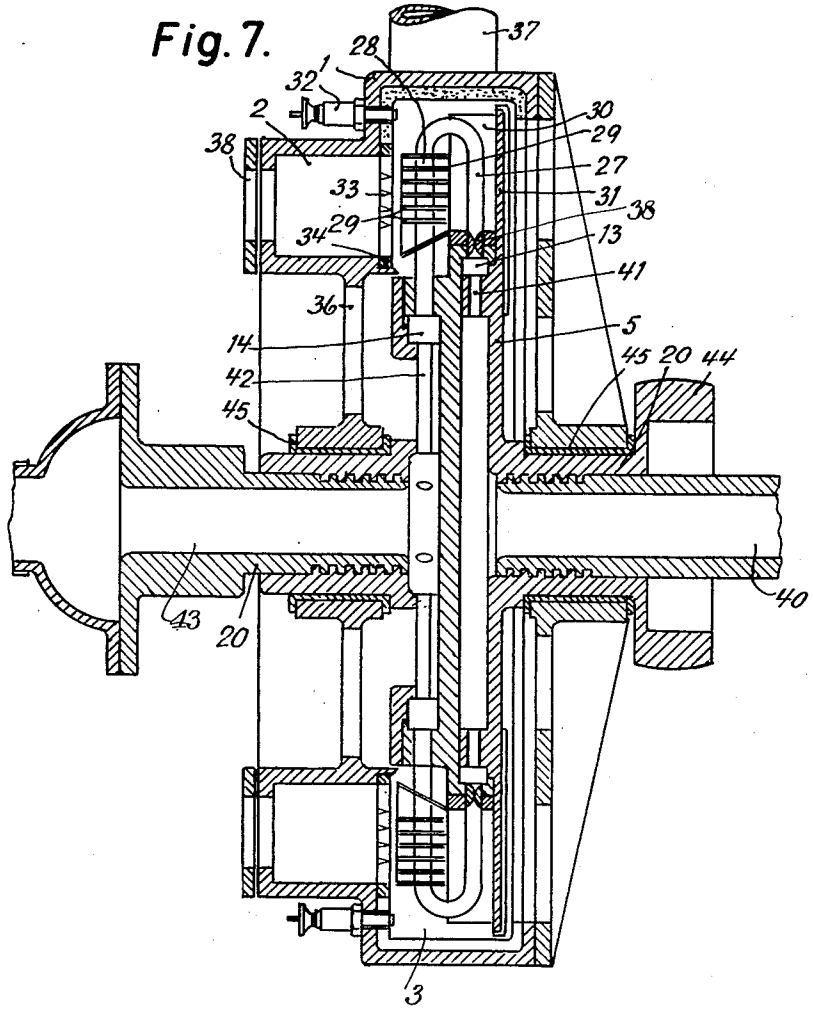

Inventor
JOSEF STARZICZNY
By Haseltine, Lake & Co.
Attorneys

Patented Dec. 13, 1938 2,140,175

UNITED STATES PATENT OFFICE

2,140,175

ROTARY BOILER AND HEAT-EXCHANGING APPARATUS

Josef Starzicsny, Copenhagen, Denmark

Application January 21, 1936, Serial No. 60,029
In Great Britain January 23, 1935

7 Claims. (Cl. 60—108)

This invention relates to turbines and rotary steam or vapour generators and is particularly concerned with steam or vapour generators of the type comprising a rotary body provided with U-shaped tubes in which the evaporation of water or another liquid takes place due to heat constantly supplied to the same. In generators of this type proposed heretofore, one leg of each U-shaped tube is filled with liquid and the other leg is partly filled with liquid.

The invention relates particularly broadly to a heat-exchanging apparatus that can be used to advantage in most cases, when the question is to heat, cool or evaporate a liquid or a gas. The use of the apparatus is especially advantageous for the production of steam and hot water, but the apparatus may also be used for other heat-exchange purposes, such as condensation, sterilization, distillation etc. The most important features are the small dimensions of the apparatus for a given capacity, and the possibility of building a power-generating boiler and turbine together, so as to form a single self-contained unit.

The main object of my invention is to provide a heat-exchanger or generator rotating in a casing and of particularly advantageous construction and capable of utilizing any common source of heat, such as gaseous, liquid or solid fuel.

Another object is to provide an apparatus of the indicated character wherein a steam boiler and turbine may be built together or separate, with a simple construction characterizing the whole, while allowing for use as a steam generator, for hot-water heating, distilling apparatus or steam condenser, or heating or cooling air, etc.

A further object is to have such apparatus which may be combined in two, one as a distiller and the other as a condenser so as to effect a great economy in space-saving for preparing fresh water on shipboard.

Other objects and the various advantages arising from its construction and use will appear in fuller detail as this specification proceeds.

It is an important object of the invention to provide an improved rotary apparatus of this type in which the transfer of heat to the contents of the tubes is effected in a highly efficient and rapid manner.

According to the present invention a steam or vapour generator comprising a rotary body provided with U-shaped tubes in which the evaporation of water or another liquid takes place due to heat constantly supplied to the same, is characterized by an atomizing device mounted at the inlet end of each tube to atomize the liquid as it enters the tube, whereby an effective transmission of heat to the contents of both legs of the tube and energetic evaporation in that leg which is connected to the inlet are ensured.

For structural reasons, it has been proposed heretofore that in generators resembling those of the type set forth, but having straight tubes, the bores of the tubes should flare continuously towards their outer ends. The proposed arrangement was not such, however, that the liquid would be atomized to any substantial extent upon its entry to the tubes.

It also has been proposed to construct a generator of the type set forth and to mount a single- or multi-stage turbine wheel rotatably within the rotary body so that the vapour generated in the U-shaped tubes will be directed against the vanes of the turbine wheel by nozzles, the rotary body being driven in the opposite direction to the turbine wheel by the reaction pressure of the steam leaving the nozzles.

The accompanying drawings illustrate a few constructions of the invention.

Fig. 1 shows a longitudinal section of a steam-generator, combined with a steam turbine according to the invention,

Fig. 2 a section of the feed-water pump along line II—II in Fig. 1,

Fig. 3 the same steam condenser combined with a steam turbine, viewed from the left, and a partial section along line III—III in Fig. 1,

Fig. 4 a longitudinal section of the steam generator along line IV—IV in Fig. 2,

Fig. 5 the same steam generator combined with a turbine, viewed from the right, and a partial section V—V in Fig. 1,

Fig. 6 a longitudinal section along line VI—VI in Fig. 2,

Fig. 7 a longitudinal section of a steam generator useful for various purposes, such as preparation of hot water, sterilization, condensing etc., in section corresponding to the one shown in Fig. 1.

The casing 1 of the constructions of the invention shown in Figs. 1–7 consists of a mixing chamber 2, a combustion chamber 3 and a collecting chamber 4 for exhaust steam.

The casing 1 contains a generator body 5 journalled in the bearings 6, 7 and 8. This generator body 5 has an annular feed-water distribution chamber 13 and a steam-collecting chamber 14. From the steam-collecting chamber 14, the steam nozzles 9 enter through the wall 10, and through these nozzles the steam is directed from

the chamber 14 to the turbine vanes 12 of the turbine wheel 11. The so-called reversing vanes 15 are rigidly attached to the generator body 5 outside of the vanes 12 on wheel 11.

The shaft 19 of the turbine wheel 11 is journalled in the casing 1 in the bearings 16, 17 and 18, and extends through one end wall of the casing 1, while the shaft 20 of the generator body 5 projects through the opposite end of the casing 1, and is fitted here with a driving pulley 21, which also may be replaced by a gear-wheel.

The feed-water supply pipe 23 is attached firmly to the casing 1, and conveys the feed water to the feed-water pumps 22, which is built together with the generator body 5. Vanes 24, Figs. 1, 2 and 6 are built into the feed-water pump 22, and pump the feed water through radially disposed channels or pipes 25, Figs. 2 and 6, to the feed-water distribution chamber 13, from which the radial vent channels 26, Figs. 2 and 4, lead to the centre of the shaft 20 of the generator body 5. Into the feed-water distribution chamber 13 a circular row of radially disposed bent U-shaped tubes with legs 27 and 28 are terminating, and the said tubes may suitably consist of copper. The tube legs run parallel to the axis of rotation. The only condition is that at least one leg 27 should open into the feed-water distribution chamber. The leg 28, which in any case must be longer than the leg 27 opens into the steam-collecting chamber 14, which similarly is annular. The feed-water distribution chamber 13 should naturally have a larger diameter than the steam-collecting chamber 14.

The bent tubes with the legs 27 and 28 are supported in the guide rings 29 and the deflector plates 30. The guide rings 29, which may have a cylindrical or conical shape, are arranged concentrically about the axis, and have for their object to distribute the heat and to direct the same to the deflector plates 30. At the same time, they increase the heat-transmitting capacity of the tube legs 28. The deflector plates 30 have for their object to attract the heat or the combustion gases and to discharge the latter into the open air, after the heat has been transmitted to the tube legs 28 and 27.

On the outer side of the deflector plate 30, an insulating disc 31 is provided for the purpose of preventing any loss of heat. By heating with gas, the gas and the quantity of air required for the combustion are directed to the mixing chamber 2 by way of the pipe 35. At the same time, the secondary air required for the combustion may be inhaled through the openings 36 in the wall of the casing 1.

Holes for the ignition burners 32 are provided at suitable intervals in the outer wall of the casing 1. The combustion chamber 3 is separated from the mixing chamber 2 by means of the partition wall 34 which is fitted with discharge openings 33, (see Figs. 1 and 3) through which the ignitible gas mixture may flow from the mixing chamber 2 to the combustion chamber 3. These discharge openings may be shaped as slits or as round holes, the shape itself being only of secondary importance. The window 38 in the mixing chamber allows observation of the combination occurring therein.

The manner of operation of the steam generator combined with a turbine shown in Figs. 1–6 is as follows.

The feed water entering by way of the pipe 23 is directed to the feed-water pump, and is collected there. When now the generator body 5 and, thereby, the feed-water pump 22 built together with the said body are set into rotation by means of a not shown starting motor, the feed water will be forced through the channels 25 to the feed-water distribution chamber 13 by means of the vanes 24 and the active centrifugal force. In the said chamber the feed water is freed from air, as any air carried along can escape by way of the channels 26 to the centre of the shaft. From the feed-water distribution chamber 13, the water is now in atomized state forced into the tube legs 27, by way of special nozzles 27'.

At the same time the ignitable mixture drawn in from the gas-mixing chamber 2 into the combustion space by way of the openings 33 is caused to combust by means of the ignition device 32. The atomized water contained in the legs 27 is evaporated by the temperature produced by the combustion, and flows now, in vaporous state, to the legs 28, in which the generated steam is further heated. In this manner a superheated steam can be obtained, the process of heat transmission being as follows. The flame produced by the combustion is drawn, by the deflector plates 30, through the spaces between the guide rings 29, a portion of the heat being given off to the contents of the legs 28. This transmission of heat is enhanced by the guide rings acting as heat-absorbing fins. The remainder of the heat drawn by the deflector plates is now given off to the contents of the legs 27, and causes the contents of the same to evaporate. Also the deflector plates act as fins, and enhance the heat transmission. Thereby the advantage is attained that the discharge temperatures of the combustion gases—after the same have given off their heat to the tube legs 27 and 28—will be lower than the temperature of the steam generated. After the combustion gases have left the deflector plates, they are forced into the open air by way of the exhaust channel 37.

The steam formed in the tube legs flows to the steam-collecting chamber 14.

From the steam-collecting chamber 14, the steam flows now at a certain velocity through the nozzles 9 to the vanes 12 of the turbine wheel 11, and thereby the vis viva of the steam is transmitted directly through the vane wheel to the shaft 19. By the curvature of the vanes the steam is in fact forced to alter the direction and magnitude of its velocity and, thereby, to deliver to the vane wheel 11 the part of its vis viva that corresponds to the change in the magnitude of its velocity.

By the reaction pressure of the escaping steam, the generator body 5 is driven in the opposite direction of the turbine wheel. The starting motor can now be uncoupled, and the number of revolutions of the generator will be maintained by the reaction pressure.

After the steam has given off its energy to the turbine wheel, it flows to the reversing vanes 15, and from there to the exhaust-collecting chamber 4.

From the exhaust-collecting chamber, the steam may be directed through the exhaust pipe 39 into the open air, or to a condenser.

The governing of this combined construction is effected solely by the supply of heat.

Fig. 7 shows a longitudinal section of a modified construction, in which the turbine wheel 11 and the members connected thereto are omitted. This construction may be used for the production of steam as well as for all kinds of heat exchange.

The cold feed water is directed through the

channels 41 to the feed-water distribution chamber 13 by way of a stationary channel 40 passing through the shaft 20. In the manner described above, the water in atomized state is forced from the feed-water distribution chamber 13 to the legs 27, and flows from there to the legs 28. The construction of the tubes with legs 27 and 28 as well as guide rings 29 and deflector plates 30 may be the same as in the embodiment described above by way of example. The various parts are marked with the same reference numerals as the corresponding parts in Fig. 1.

From the leg 28, the contents flow to the chamber 14, and from there by way of radial channels 42 to a central stationary channel 43, which passes through the hollow shaft 20.

From here the contents may be directed to the places of consumption. The said contents may be steam, hot water, condensed water or any liquid or gas.

One condition for the operation of the construction last described is that the generator body should be maintained rotating constantly. For this purpose, a belt pulley 44 is fixed on the shaft of rotation, and by means of this pulley the generator can be driven by means of a driving motor. The driving may also be effected directly without belts or by means of a set of gear-wheels.

The generator is journalled in ordinary journal bearings 45.

In the constructions shown in Figs. 1–7, the feed-water pump 22 acts entirely automatically, as it supplies more feed water, as soon as the generation of steam increases and, thereby, also the number of revolutions of the generator body 5 is increased.

Owing to the tube legs 27 and 28 sweeping at a relatively high velocity through the hot combustion gases, a very high transmission of heat will be attained, which on the other hand only can be handled by the positive water circulation. Further the fuel is far better utilized than by the combustion plants and steam plants known heretofore. It should be emphasized that herein the steam pressure depends on the number of revolutions of the generator. Owing to the compact construction of the generator it is easily possible to produce steam of the critical pressure (224.2 atmospheres and 374° C.), without meeting any difficulty from materials able to resist this high pressure. Also the heat transmission of the heating surface is considerably higher than what is known before. Quantities of heat amounting to 300,000–500,000 kilogramme calories per square metre (120,000 to 200,000 B. t. u. per square foot) per hour may be transmitted in this manner, without the heating surface being thereby injured in any manner.

The apparatus is extremely simple and economical to operate. Various modifications of the machine may be made, without the scope or meaning of the invention being thereby transgressed.

Having now described my invention what I claim as new and desire to secure by Letters Patent is:

1. In a steam or vapor generator including, a rotatable member having a plurality of U-shaped tubes for evaporating water or other fluid by means of heat applied to the same, there being means for heating said tubes, the combination of an atomizing device mounted at the inlet end forming the first leg of each tube for atomizing the fluid to be evaporated as the fluid enters the tube in order to prevent solid fluid from entering said tube and initiate immediate evaporation in said first leg of said tube.

2. A steam or vapor generator according to claim 1, wherein a turbine rotor having blades is rotatably mounted within the rotatable member in a position wherein the blades on said rotor will have the vapor generated in the tubes directed from the second legs thereof against the same, there being radial guide channels stationary with respect to and communicating with said second legs of said tubes for directing the vapor against said blades, and a plurality of reversing blades mounted upon said rotatable member receiving the vapor passing from the blades of the rotor, said reversing blades having a form and inclination causing reaction producing rotation of the rotatable member in one direction and a relatively higher speed of rotation of the rotor in the opposite direction.

3. In a steam or vapor generator according to claim 1, wherein a closed annular fluid feed distributing chamber is connected to the inlet ends of the U-shaped tubes, the feature of having said chamber provided with a plurality of inwardly directed radially disposed air removing channel members which extend from said chamber and serve for removing free air from the fluid prior to entry thereof into said tubes.

4. In a steam or vapor generator according to claim 1, wherein a closed annular fluid feed distributing chamber is connected to the inlet ends of the U-shaped tubes the feature of having the chamber provided with a plurality of inwardly directed radially disposed air removing channel members which extend from said chamber and serve for removing free air from the fluid prior to entry thereof into said tubes, in combination with an annular collecting chamber into which the outlet ends of the tubes open, which annular chamber is adapted to collect the vapor from said tubes and is of lesser mean diameter than the annular distributing chamber.

5. A steam or vapor generator according to claim 1, wherein a closed annular fluid feed distributing chamber is connected to the inlet ends of the U-shaped tubes and is provided with a plurality of inwardly directed radially disposed air channel members for removing free air from the fluid prior to entry thereof into said tubes, and wherein a pump built into the rotatable member serves to supply fluid to the distributing chamber.

6. A steam or vapor generator according to claim 1, wherein a closed annular fluid feed distributing chamber is connected to the inlet ends of the U-shaped tubes and is provided with a plurality of inwardly directed radially disposed air channel members for removing free air from the fluid prior to entry thereof into said tubes, and wherein an annular collecting chamber is provided into which the outlet ends of the tubes open, which annular chamber is adapted to collect the vapor from said tubes and is of lesser mean diameter than the annular distributing chamber, and a pump built into the rotatable member consists of a centrifugal pump having a pump rotor provided with vanes forcing fluid introduced into the pump into the distributing chamber, there being radial channels communicating from the pump to the interior of said chamber and the diameter of the distributing chamber being substantially greater than that of the pump.

7. In a steam or vapor generator according to claim 1, wherein a closed annular fluid feed dis-

tributing chamber is connected to the inlet ends of the U-shaped tubes and is provided with a plurality of inwardly directed radially disposed air channel members for removing free air from the fluid prior to entry thereof into said tubes, the feature of having means for supplying the fluid to the annular distributing chamber comprising a hollow shaft supporting the rotatable member and a stationary tubular member directly carrying the fluid and extending through said hollow shaft.

JOSEF STARZICZNY.