W. O. J. ANDERSSON.

CALCULATING MACHINE.

APPLICATION FILED AUG. 16, 1918.

1,338,481.

Patented Apr. 27, 1920.

2 SHEETS—SHEET 1.

Fig. 1.

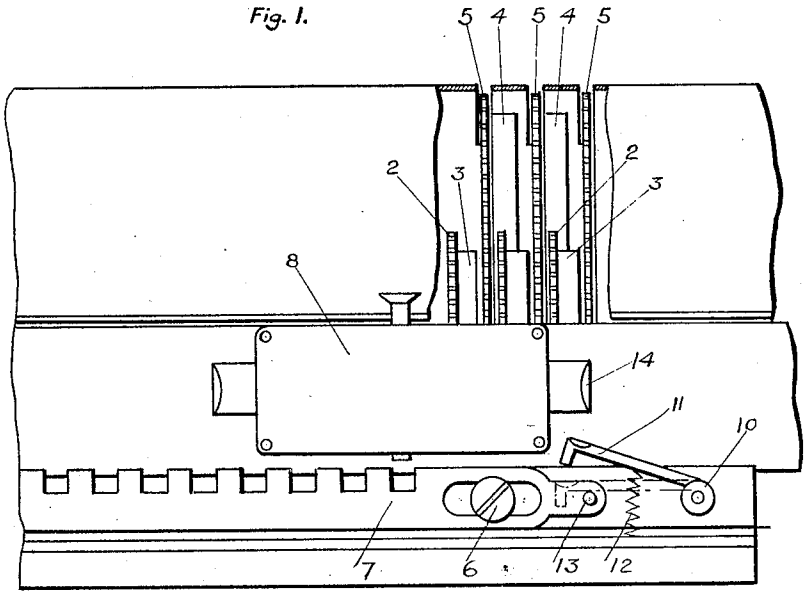

Fig. 2.

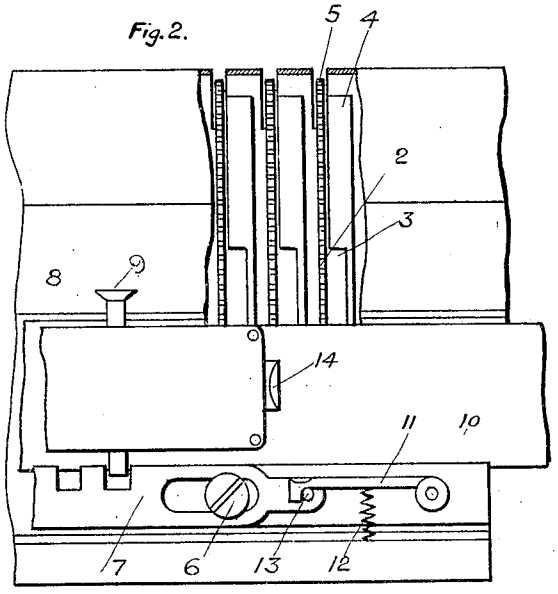

Fig. 3.

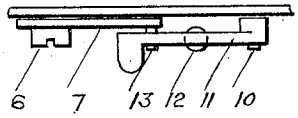

INVENTOR:

Victor O. J. Andersson

By Wm Wallace White

ATT'Y.

W. O. J. ANDERSSON.

CALCULATING MACHINE.

APPLICATION FILED AUG. 16, 1918.

1,338,481. **Patented Apr. 27, 1920.**

2 SHEETS—SHEET 2.

Fig. 4.

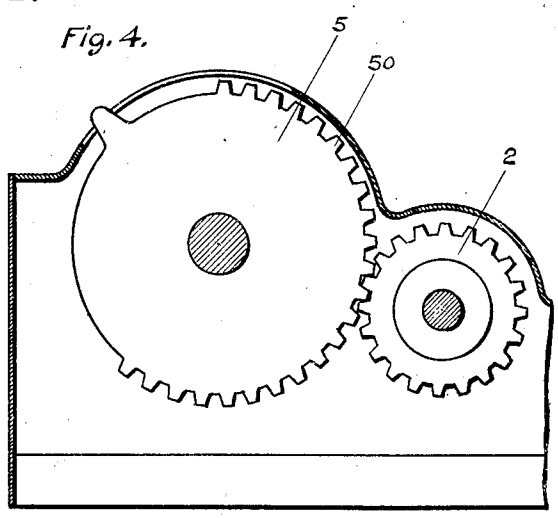

Fig. 5.

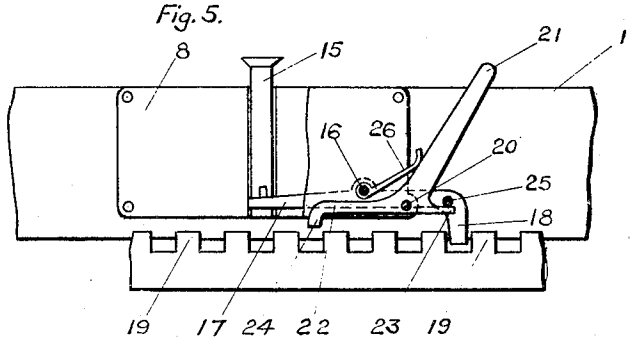

Fig. 6.

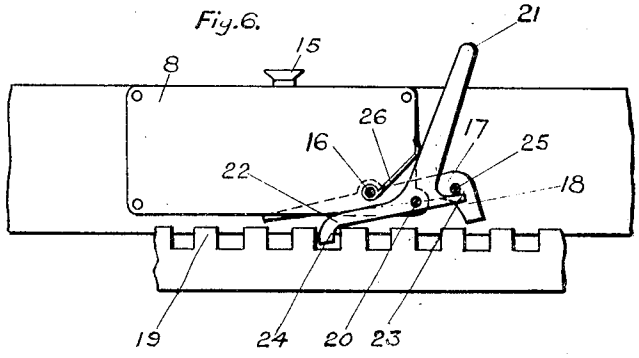

INVENTOR:

Victor O. J. Andersson

By Wm Wallace White

ATT'Y.

UNITED STATES PATENT OFFICE.

WICTOR OSKAR JULIUS ANDERSSON, OF MALMÖ, SWEDEN.

CALCULATING-MACHINE.

1,338,481. Specification of Letters Patent. Patented Apr. 27, 1920.

Application filed August 16, 1918. Serial No. 250,159.

To all whom it may concern:

Be it known that I, WICTOR OSKAR JULIUS ANDERSSON, a subject of the King of Sweden, residing at Malmö, in the county of Malmöhus and Kingdom of Sweden, have invented new and useful Improvements in Calculating-Machines, of which the following is a specification.

This invention relates to calculating machines of the type shown and described, for instance, in German Patents #231,695 of February 28, 1911, and #257,653 of March 14, 1913, in which a setting mechanism mounted on a stationary portion of the machine carries a series of numerals adapted to form the multiplicand, and a registering mechanism or counter which obtains the result is mounted on a slidable carriage, the object of the invention being to provide an improved calculating machine of the character set forth having means for locking the carriage in such a position that the value on the counter can be transferred or thrown back to the setting mechanism in a single operation.

My invention will be more readily understood by reference to the accompanying drawings in which Figure 1 illustrates a front elevation of a part of a machine to which one embodiment of my invention is applied with a part of the machine casing cut away and the carriage in normal position for the calculating operation. Fig. 2 illustrates a similar view but with the carriage in transferring position.

Fig. 3 is a plan view of a fragment of the slidable carriage and its locking hook.

Fig. 4 is a cross section of the machine.

Fig. 5 illustrates a part of the machine provided with a second embodiment of the invention and with the carriage in normal position for the calculating operation.

Fig. 6 is a similar view but with the carriage in transferring position.

The present invention relates solely to the means for locking the slidable carriage in adjusted position with relation to the stationary portion of the machine, and therefore only so much of a machine of the type described in the patents hereinbefore referred to as is necessary to illustrate my invention is herein shown.

The slidable carriage 1 supports in the usual manner the counter wheels 3 provided with pinions 2, which are operated by teeth carried by the setting disks 4 and adjustable by means of the cam disks 5. The carriage 1 is adapted to be slid laterally with respect to the stationary portion by means of a locking device 8 supported by the carriage and coöperating with a rack 7 slidably mounted on a pin 6 in the bottom plate of the machine, the pin 6 limiting the sliding motion of the rack 7 to correspond with one movement of the carriage. According to the embodiment illustrated in Figs. 1–3, the machine is provided with a hook 11 pivotally mounted on the bottom plate of the machine by means of a pin 10, the hook being raised to the position illustrated in Fig. 1 by means of a spiral spring 12. The rack 7 is provided with a pin 13 supporting the hook in its lower position. The hook 11 is of such a length that the pin 13 is engaged by the lowered hook 11 when the carriage 1 together with the rack 7 coöperating with the locking device 8 is slid from the normal position as in Fig. 1 to the position for the transferring operation, as shown in Fig. 2.

The operation of the device is as follows:

In order to transfer a sum received on the registering mechanism of the carriage to the setting disks 4,—that is, to revolve the wheels or disks 4 into the same value position as the counter wheels 3, and thereby to render operative corresponding numbers of teeth on the wheels 4,—the hook 11 is pressed down by the finger of the operator until stopped by the pin 13. The carriage is then slid to the left by pressing on the grip 14 on the right side of the locking device so that the rack 7 is also slid to the left. The sliding of the carriage is limited by the lowered hook 11, so that the pinions 2 of the counter wheels 3 engage the teeth (Fig. 4) of the cam disks, as illustrated in Fig. 2. The slidable plunger 9 is then depressed into engagement with the rack 7, thereby to retain the pinions in engagement with the teeth of the cam disks.

The counter is now in position for transferring the sum to the adjusting wheels in the usual well known manner.

In this manner all of the pinions 2 are brought into mesh with the teeth of their corresponding cam disks so that by manually operating the counters to zero position the setting disks are rotated into position to expose the same value as was shown on the counters when the pinions were brought into mesh with the teeth of the cam disks. This setting or transferring operation is common

and well understood, and I do not desire to make any claim to the mechanism therefor. It will be obvious, however, that I have provided a locking mechanism by means of which in one sliding operation the entire series of counters are brought into position to transfer or set the amount shown thereon to the registering or setting disks and are locked in such position until the setting operation is completed.

In the embodiment illustrated in Figs. 5 and 6 the transferring and locking devices can also be actuated by a single operation.

The carriage 1 is locked by an arm 17 pivotally mounted on a pin 16 in the carriage 1 and provided with a projection 18, adapted to engage a rack 19 secured on the machine plate. By means of a rod or key 15 which is slidably mounted on the locking device 8, the projection 18 can be released from the rack 19. The function of the key 15 is to secure the counter 1 to the rack 19 by means of the lever 17 and catch 18, or to release it therefrom when required. A lever 21 is pivotally mounted on a pin 20 carried by the locking device 8 and is provided with two arms 22 and 23, the arm 22 being formed with a heel 24 adapted to engage in the rack 19. The arm 17 is provided with a pin 25 which normally rests on the arm 23. The arm 21 is normally pressed to the right by means of a spring 26 secured on the pin 16, so that the heel 24 in the normal position of the lever 21 is released from the rack 19.

The device is operated in the following manner:

By pressing the lever 21 (which is normally held in the position shown in Fig. 5), to the left as shown in Fig. 6, the projection 18 is released from the rack 19 and the heel 24 simultaneously engages the rack 19, the heel 24 being arranged in such a way that the carriage 1 is slid to a position in which the counter pinions 2 engage the teeth 50 of the cam disks 5 so that the transferring can be accomplished. When the arm 21 is released it is swung to the right by means of the spring 26, so that the heel 24 is released and the projection 18 again engages the rack.

Having now described my invention, what I claim is:

1. The combination with a calculating machine having a series of setting disks mounted for rotation on a stationary portion of the machine and a corresponding number of counting wheels mounted for rotation on a carriage adapted to slide relatively to said stationary portion, of coöperating means carried by the stationary portion and carriage for limiting the sliding movement of said carriage and locking all of said counting wheels in engagement with their corresponding setting disks, said means including a rack slidably mounted on said stationary member, a vertically movable pin carried by said carriage and adapted to engage said rack, and coöperating means carried by the rack and stationary member for limiting the sliding movement of said rack.

2. The combination with a calculating machine having a series of setting disks mounted for rotation on a stationary portion of the machine and a corresponding number of counting wheels mounted for rotation on a carriage adapted to slide relatively to said stationary portion, of coöperating means carried by the stationary portion and carriage for limiting the sliding movement of said carriage and locking all of said counting wheels in engagement with their corresponding setting disks, said means including a rack slidably mounted on said stationary portion and provided with a slot, a headed pin threaded into said stationary member and engaging said slot thereby to limit the sliding movement of said rack, a vertically movable pin carried by said carriage and adapted to engage said rack, a laterally extending pin carried by said rack, and a hook pivotally mounted on said stationary portion and adapted to engage said pin for holding the rack at one of the limits of its sliding movement.

In testimony whereof I have affixed my signature in presence of two witnesses.

WICTOR OSKAR JULIUS ANDERSSON.

Witnesses:

ASA FERGUSON,

RAY TICKSON.