(No Model.)

M. D. TEMPLE.

PUMP.

No. 590,348. Patented Sept. 21, 1897.

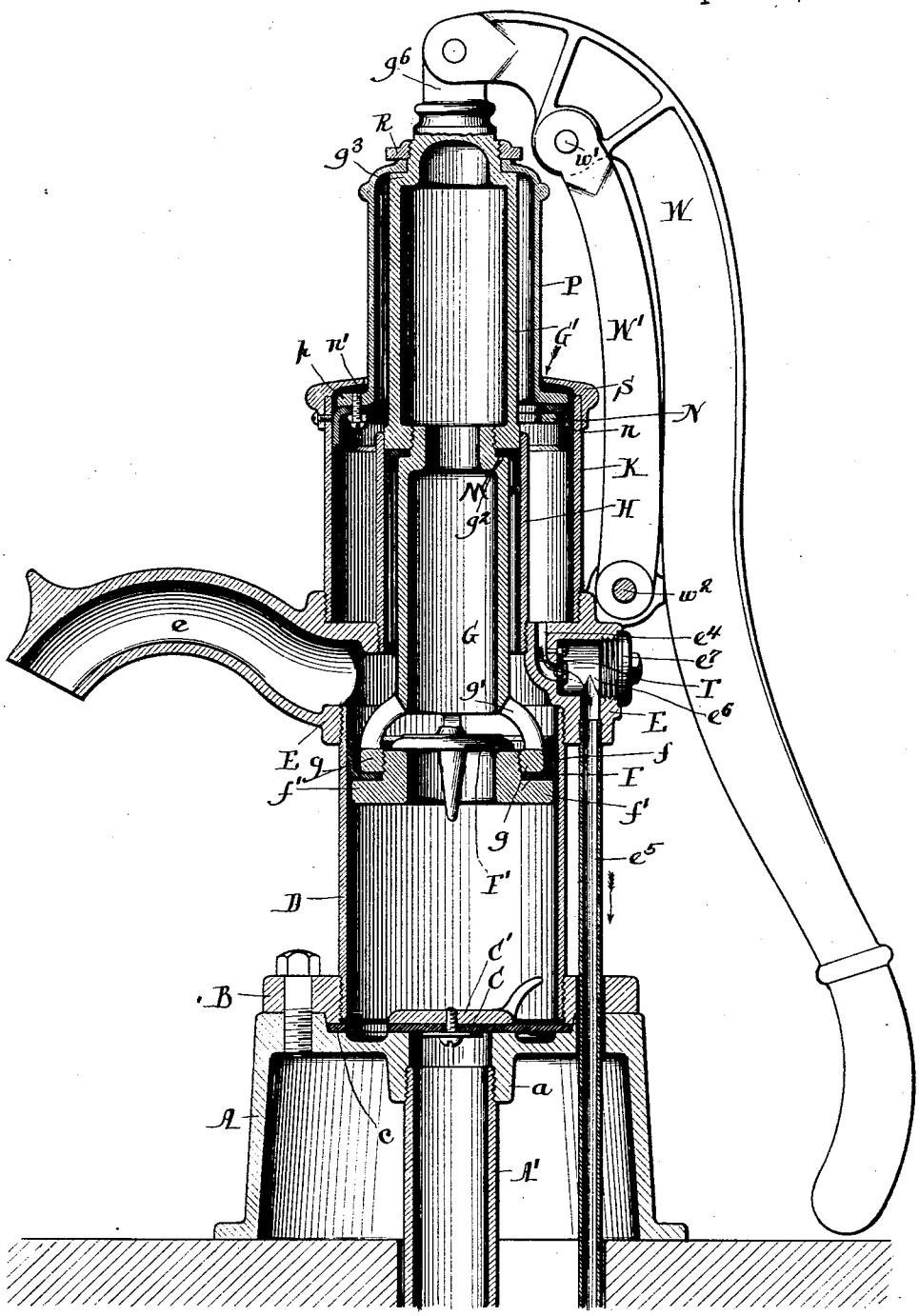

Witnesses:
Fred Gerlach
Alberta Adamick

Inventor:
M. D. Temple
By Peirce & Fisher
Attorneys.

THE NORRIS PETERS CO., PHOTO-LITHO., WASHINGTON, D. C.

UNITED STATES PATENT OFFICE.

MORRIS D. TEMPLE, OF CHICAGO, ILLINOIS.

PUMP.

SPECIFICATION forming part of Letters Patent No. 590,348, dated September 21, 1897.

Application filed October 5, 1896. Serial No. 607,943. (No model.)

To all whom it may concern:

Be it known that I, MORRIS D. TEMPLE, a citizen of the United States, and a resident of the city of Chicago, in the county of Cook and State of Illinois, have invented certain new and useful Improvements in Pumps, of which I do declare the following to be a full, clear, and exact description, reference being had to the accompanying drawing, forming a part of this specification.

The present invention has for its object to provide an improved construction of double-acting force-pump of that type wherein provision is made for purifying the water within the well or cistern by forcing a supply of fresh air into the body of water in order to destroy animalculæ, organic matter, or like disease-germs contained therein, and thus maintain the water in a pure and potable condition.

The invention consists in the various improvements hereinafter described, illustrated in the accompanying drawing, and particularly pointed out in the claims at the end of this specification.

A designates the base or standard of the pump, that may be conveniently attached to a sink or like support in the usual manner. The base A is provided at its center with a screw-threaded cylindrical portion *a*, to which is connected the upper end of the pipe A′, that leads to the well or cistern.

To the top of the base A is bolted a ring B, between which and the base A is held the packing-leather *c*, from which also is formed the valve C, this valve having attached thereto the metal plate C′, of familiar construction. The ring B is interiorly threaded to receive the lower end of the water-cylinder D, and the upper end of this cylinder D is exteriorly threaded to engage corresponding threads formed upon the interior of the central portion E of the pump.

From one side of the central portion E of the pump and preferably cast in one piece therewith extends a spout *e*, that communicates with the interior of the water-cylinder D. Within this water-cylinder D is the piston F, the cup-leather *f* of which is clamped between the annular flange *f′* of the piston and a ring *g*, that is connected to the lower end of the hollow trunk G by means of the depending arms *g′*. The piston F is formed with the central opening, adapted to be closed by a puppet-valve F′, that seats against the upper face of the piston F. The upper part of the central portion E of the pump is formed with two vertical annular screw-threaded surfaces that receive, respectively, the cylinders H and K.

Within the cylinder H works a piston M, consisting, preferably, of a cup-leather that is held in place between a shoulder g^2 at the upper end of the hollow trunk G and the lower threaded end of the supplemental hollow trunk G′, that engages with the reduced and threaded upper end of the hollow trunk G.

Within the outer cylinder K works a piston N, that consists, preferably, of a cup-leather that is attached by a suitable ring *n* and screws *n′* to an annular flange *p* at the base of a hollow trunk P, that encircles a supplemental trunk G′ and is connected thereto, preferably as shown in the drawing—that is to say, the upper end of the outer hollow trunk P is contracted and rests upon a shoulder g^3 at the top of the supplemental trunk G′, and is held in place thereon by means of a threaded ring or nut R, that engages the threaded upper end of the supplemental trunk G′. The extreme upper end of the trunk G′ is provided with an extension g^6, to which is pivotally connected the upper end of the pump-handle W, this pump-handle being also pivotally connected, as at *w′*, to an oscillating fulcrum W′, the lower end of which is pivoted, as at w^2, to bearing-lugs projecting from the central portion E of the pump or to any other convenient support.

To the top of the outer cylinder K is preferably attached a cover-plate S, that extends inwardly to a point near the outer trunk P, the purpose of this cover-plate S being to prevent the fouling of the space between the outer cylinder K and the outer trunk P.

The space between the trunk G and the cylinder H is designed to receive water as the several pistons of the pump are raised, this water being forced downward and outward through the pump-spout, as well understood by those familiar with double-acting force-pumps. The space within the trunk G and the supplemental trunk G′ (which trunks com-

municate as shown) is designed as an air-chamber to not only cushion the stroke of the pump, but also to provide for a confined body of air, which, being compressed at one stroke of the pump, shall by its expansion at the change of stroke serve to maintain a uniform discharge of the water from the pump-spout. The annular space between the cylinder H and the outer cylinder K, and as well also the annular space between the supplemental trunk G′ and the outer trunk P, serves as an air-space into which air will be received on the upstroke of the piston N by the slight peripheral contraction of the leather of such piston, and from which air will be discharged on the downstroke of the piston N through a channel e^4 into a pipe e^5, that is connected to a threaded opening in the central portion E of the pump-body. The channel e^4 is obstructed by a flap-valve T, that is held within a chamber e^6, formed in the central portion E of the pump, and one side of this chamber e^6 has a screw-threaded opening or hand-hole that is normally closed by a correspondingly-threaded plug e^7.

From the foregoing description it will be seen that during the upward movement of the several pistons water will be raised by the piston F and will be caused to discharge through the spout *e* of the pump and will be forced also to enter the annular space between the trunk G and the cylinder H and to enter partially also and compress the air within the trunks G and G′. During this upward movement of the pistons air will pass downward in the direction of the arrows around the cup-leather of piston N into the space between the cylinders H and K. As the several pistons are forced downward by a reverse stroke of the pump-handle the water within the annular space between the trunk G and cylinder H will be forced downward by the piston M and the expansion of the air within the trunks G and G′ will also displace the water therein and force it through the spout *e*. The body of air within the trunks G and G′ serves also to cushion the strokes of the pistons and serves not only to materially increase the uniform action of the pump, but renders the same more easy. As the piston N descends the air within the annular space between the cylinders H and K is forced downward through the channel e^4, past the valve T, into the chamber e^6, and thence by the pipe e^5 down into the well or cistern. By this means a supply of fresh air will be delivered into the body of water, thereby purifying the same and rendering it clear and potable.

It is manifest that the precise details of construction above set out may be varied without departing from the spirit of the invention and that features of the invention may be adopted without its use as an entirety.

I do not wish to be understood as claiming herein, broadly, the feature of providing a trunk for the piston or plunger that works within the water-cylinder, as this forms the subject-matter of an application filed by me of even date herewith, Serial No. 607,942.

Having thus described my invention, what I claim as new, and desire to secure by Letters Patent, is—

1. The combination with a double-acting pump having a lower water-cylinder and having an upper cylinder communicating at its bottom with said lower cylinder and having pistons for said upper and lower cylinders, of an air-chamber surrounding said upper cylinder and a piston for compressing the air within said air-chamber, suitable means for admitting air to said air-cylinder and for delivering air therefrom into the well, and suitable means for operating said several pistons, substantially as described.

2. The combination with a double-acting pump having a lower water-cylinder, and having an upper water-cylinder communicating at its bottom with said lower cylinder and having pistons for said upper and lower cylinders, of an air-chamber surrounding said upper cylinder, a piston for compressing the air within said cylinder, a movable trunk for operating said piston communicating at its bottom with said air-chamber, suitable passages for admitting air to said air-chamber and for delivering air therefrom to the well and means for operating said several pistons, substantially as described.

3. A double-acting pump comprising a water-cylinder, a trunk for said piston open at its top and bottom, an upper cylinder surrounding said trunk and communicating at its lower end with the water-cylinder, a piston for said upper cylinder, a supplemental trunk above said last-named piston and communicating with said first-mentioned trunk, an air-chamber surrounding said upper cylinder, a piston within said air-chamber, a movable trunk connected to said piston and surrounding said supplemental trunk, suitable air-passages leading to and from said air-chamber and suitable means for operating said several pistons, substantially as described.

4. A double-acting pump comprising a central body portion having an annular screw-threaded surface at its bottom and two annular screw-threaded surfaces of different diameters and arranged one within the other at its top, a water-cylinder engaging the annular threaded surface at the bottom of said central portion of the pump-body two cylinders of different diameters engaging the annular threaded surfaces at the top of said central portion of the pump-body, pistons within said several cylinders and suitable channels for admitting air to and delivering it from the air-chamber formed by the cylinders connected to the top of the central portion of the pump-body, substantially as described.

5. A double-acting pump comprising a lower water-cylinder D having a piston therein, the trunk G and the supplemental trunk

G′ connected together and to said piston, the cylinders H and K connected to the central portion of the pump-body, the pistons M and N arranged within said cylinders H and K, a trunk P connected to said piston N, suitable passages for the admission of air to and from the space between the cylinders H and K and a pipe e^5 for conducting the air down into the well or cistern, substantially as described.

MORRIS D. TEMPLE.

Witnesses:
GEO. P. FISHER, Jr.,
ALBERTA ADAMICK.