US0D1036616S

(12) United States Design Patent

Douglass

(10) Patent No.: US D1,036,616 S
(45) Date of Patent: ** Jul. 23, 2024

(54) **SEPTIC CHAMBER**

(71) Applicant: **Prinsco, Inc.**, Willmar, MN (US)

(72) Inventor: **Brian L. Douglass**, Willmar, MN (US)

(73) Assignee: **Prinsco, Inc.**, Willmar, MN (US)

(**) Term: **15 Years**

(21) Appl. No.: **29/827,089**

(22) Filed: **Feb. 17, 2022**

(51) **LOC (14) Cl.** **23-01**

(52) **U.S. Cl.**
USPC **D23/207**

(58) **Field of Classification Search**
USPC D23/206–209, 213–214
CPC B01D 39/00; B01D 39/12; B01D 61/08; B01D 61/04; B01D 61/025; B01D 61/026; B01D 43/00; C02F 1/441; C02F 1/68; C02F 1/686; C02F 1/76; C02F 2103/42; E03C 1/12; B01L 2300/0681; E03B 11/08; E03F 1/003; E04H 4/1281
See application file for complete search history.

(56) **References Cited**

U.S. PATENT DOCUMENTS

2,153,789	A	4/1939	Carswell et al.	
3,495,410	A	2/1970	Bailey et al.	
3,648,468	A	3/1972	Bowers	
4,245,924	A	1/1981	Fouss et al.	
4,254,885	A	3/1981	Fouss et al.	
4,286,808	A	9/1981	Fouss et al.	
4,357,190	A	11/1982	Fouss et al.	
4,359,167	A	11/1982	Fouss et al.	
4,360,042	A *	11/1982	Fouss	E02B 11/005 138/119
4,363,732	A	12/1982	Crates et al.	
4,374,079	A	2/1983	Fouss et al.	
4,523,613	A	6/1985	Fouss et al.	
4,527,319	A	7/1985	Rosenbaum et al.	
RE32,312	E	12/1986	Crates et al.	
4,709,723	A	12/1987	Sidaway et al.	
4,759,661	A *	7/1988	Nichols	E03F 1/003 405/48
5,017,041	A	5/1991	Nichols	
5,087,151	A	2/1992	DiTullio	
D329,684	S *	9/1992	Gray	D23/207
5,156,488	A	10/1992	Nichols	
5,336,017	A	8/1994	Nichols	

(Continued)

OTHER PUBLICATIONS

Prinsco Pro4 Onsite Chamber. Catalogue [Online]. prinsco.com 2023. [Retrieved on Jul. 12, 2023]. Retrieved from the Internet: <URL:https://www.prinsco.com/prinsco-markets/products/pro4/> (Year: 2023).*

(Continued)

Primary Examiner — Janice Hallmark
Assistant Examiner — Adedoyin Taiwo Odeyale
(74) *Attorney, Agent, or Firm* — Schroeder & Siegfried, P.A.

(57) **CLAIM**

The ornamental design for a septic chamber, as shown and described.

DESCRIPTION

FIG. **1** is a front perspective view of a septic chamber showing my new design;
FIG. **2** is a rear perspective view thereof;
FIG. **3** is a top plan view;
FIG. **4** is a bottom plan view;
FIG. **5** is a right side elevational view;
FIG. **6** is a left side elevational view;
FIG. **7** is a rear elevational view; and,
FIG. **8** is a front elevational view.
Broken lines illustrate portions of the septic chamber that form no part of the claimed design.

1 Claim, 7 Drawing Sheets

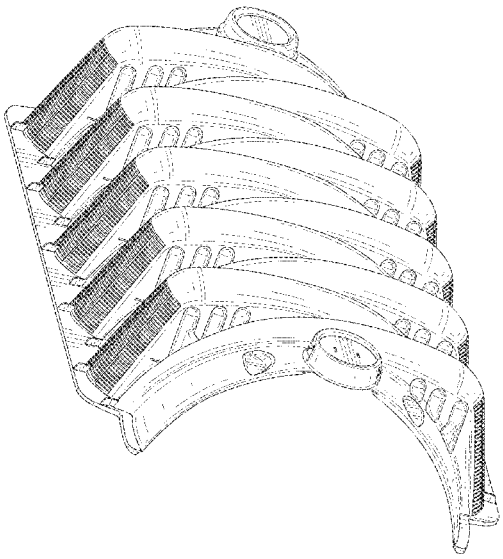

(56) **References Cited**

U.S. PATENT DOCUMENTS

5,401,116 A 3/1995 Nichols
5,401,459 A 3/1995 Nichols et al.
5,419,838 A 5/1995 DiTullio
5,498,104 A * 3/1996 Gray E03F 1/003 403/364
5,511,903 A 4/1996 Nichols et al.
5,556,231 A * 9/1996 Sidaway E03F 1/003 405/48
5,588,778 A 12/1996 Nichols et al.
5,669,733 A 9/1997 Daly et al.
5,716,163 A 2/1998 Nichols et al.
5,773,756 A 6/1998 DiTullio
5,839,844 A 11/1998 Nichols et al.
D403,047 S 12/1998 Gray
5,890,838 A 4/1999 Moore, Jr. et al.
6,018,909 A 2/2000 Potts
6,076,993 A 6/2000 Gray
6,129,482 A 10/2000 DiTullio
6,270,287 B1 8/2001 Gray
6,322,288 B1 11/2001 DiTullio
6,361,248 B1 * 3/2002 Maestro E03F 1/003 405/48
6,375,388 B1 4/2002 Zoeller et al.
6,443,652 B1 9/2002 Houch et al.
6,485,647 B1 11/2002 Potts
D469,187 S * 1/2003 Maestro D25/1
D474,524 S 5/2003 Benecke
D474,525 S 5/2003 Benecke
D477,381 S 7/2003 Benecke
6,592,293 B1 7/2003 Hedstrom et al.
6,602,023 B2 8/2003 Crescenzi et al.
6,612,777 B2 9/2003 Maestro
6,679,653 B1 1/2004 DiTullio
6,680,011 B2 1/2004 Moore, Jr. et al.
6,698,975 B1 3/2004 Benecke
6,719,490 B2 4/2004 Maestro
6,783,683 B2 8/2004 Collings
6,814,863 B2 11/2004 Hallahan et al.
6,854,925 B2 2/2005 DiTullio
6,887,383 B2 5/2005 Potts
6,907,997 B2 6/2005 Thacker et al.
6,923,905 B2 8/2005 Potts
6,969,464 B1 11/2005 Potts
6,991,734 B1 1/2006 Smith et al.
6,994,355 B2 2/2006 Brochu et al.
7,004,221 B2 2/2006 Moore, Jr. et al.
7,008,138 B2 3/2006 Burnes et al.
7,033,496 B2 4/2006 Thacker et al.
7,052,209 B1 5/2006 Kruger et al.
7,118,306 B2 10/2006 Kruger et al.
7,160,059 B2 1/2007 Hedstrom et al.
D537,912 S 3/2007 Benecke
D538,387 S 3/2007 Benecke
D538,388 S 3/2007 Benecke
D538,882 S 3/2007 Benecke
7,189,027 B2 3/2007 Brochu et al.
7,207,747 B1 4/2007 Englad
7,217,063 B2 5/2007 Moore, Jr. et al.
7,226,241 B2 6/2007 DiTullio
7,237,981 B1 7/2007 Vitarelli
7,273,330 B1 9/2007 Brochu et al.
7,306,399 B1 12/2007 Smith
7,306,400 B1 12/2007 Brochu et al.
7,309,434 B2 12/2007 Potts
7,311,467 B2 12/2007 Moore, Jr.
7,351,005 B2 4/2008 Potts
7,351,006 B2 4/2008 Burnes et al.
7,364,384 B1 4/2008 Swistak
7,374,670 B2 5/2008 Potts
7,396,188 B2 7/2008 Brochu et al.
7,413,382 B2 8/2008 Hedstrom et al.
7,419,331 B2 * 9/2008 Brochu E03F 1/003 138/173
7,419,332 B1 * 9/2008 Brochu E02B 11/005 405/49
7,451,784 B2 11/2008 Goddard
7,465,122 B2 12/2008 Brochu et al.
7,465,390 B2 12/2008 Potts
7,473,053 B1 1/2009 Brochu et al.
7,491,015 B2 2/2009 Coppes et al.
7,500,805 B1 3/2009 Brochu et al.
7,517,172 B2 4/2009 Sipaila
7,585,130 B2 9/2009 Swistak et al.
7,611,306 B1 * 11/2009 Hallahan E03F 1/003 405/49
7,632,447 B2 12/2009 Swistak et al.
7,637,691 B1 12/2009 DiTullio
D613,819 S 4/2010 DiTullio
7,744,759 B1 6/2010 Potts
7,806,627 B2 10/2010 DiTullio
7,841,801 B2 11/2010 Burnes
D630,294 S 1/2011 Hardesty et al.
7,887,256 B2 2/2011 Miskovich
7,914,230 B2 3/2011 Moore, Jr. et al.
7,914,231 B2 * 3/2011 Coppes E03F 1/003 405/45
D638,094 S 5/2011 DiTullio
D638,095 S * 5/2011 DiTullio D23/207
8,002,497 B2 8/2011 Hedstrom et al.
8,070,005 B1 12/2011 Kruger et al.
8,147,688 B2 4/2012 Adams et al.
8,151,999 B1 4/2012 Moore, Jr. et al.
8,256,990 B2 9/2012 Koerner
D668,318 S * 10/2012 DiTullio D23/207
8,297,880 B2 10/2012 Brochu et al.
8,322,948 B2 12/2012 Moore, Jr. et al.
8,337,119 B2 12/2012 Burnes et al.
8,366,346 B2 2/2013 DiTullio
8,414,222 B2 4/2013 DiTullio
8,425,147 B2 4/2013 Cislo et al.
8,425,148 B2 4/2013 DiTullio
8,491,224 B2 7/2013 Cobb et al.
8,550,807 B2 10/2013 Kolbet
8,579,624 B2 11/2013 Sutton et al.
8,617,390 B2 12/2013 Potts
8,672,583 B1 3/2014 Mailhot et al.
8,740,005 B1 6/2014 Holbrook et al.
8,789,714 B1 7/2014 Kruger et al.
8,801,326 B2 8/2014 Coppes et al.
8,857,641 B1 10/2014 Moore, Jr. et al.
9,016,979 B1 4/2015 Coppes et al.
9,045,873 B1 6/2015 Moore, Jr.
D737,927 S * 9/2015 DiTullio D23/207
9,174,863 B2 11/2015 Potts
9,233,775 B1 1/2016 Holbrook et al.
9,255,394 B2 2/2016 Mailhot et al.
9,260,854 B1 2/2016 Moore, Jr. et al.
9,273,440 B1 3/2016 Moore, Jr. et al.
D753,262 S 4/2016 DiTullio
9,365,993 B1 6/2016 Moore, Jr. et al.
9,403,692 B2 8/2016 Potts
9,556,576 B2 1/2017 Mailhot et al.
9,637,907 B2 5/2017 Mailhot et al.
9,650,271 B2 5/2017 Potts
9,656,892 B2 5/2017 Potts
9,670,660 B1 6/2017 Moore, Jr. et al.
D791,272 S 7/2017 DiTullio
D792,552 S * 7/2017 DiTullio D23/207
9,752,312 B2 9/2017 Holbrook et al.
9,765,509 B1 * 9/2017 DiTullio B29C 44/02
9,809,968 B1 11/2017 Holbrook et al.
9,840,040 B2 12/2017 Moore, Jr. et al.
9,850,647 B1 12/2017 Coppes et al.
9,850,648 B1 12/2017 DiTullio
D806,827 S * 1/2018 Mailhot D23/207
9,885,171 B2 2/2018 Mailhot et al.
9,889,986 B2 2/2018 Holbrook et al.
9,982,425 B2 5/2018 Vitarelli et al.
D820,384 S * 6/2018 DiTullio D23/207
10,065,875 B2 9/2018 Potts
D832,393 S 10/2018 DiTullio et al.
10,179,989 B2 1/2019 DiTullio

(56) **References Cited**

U.S. PATENT DOCUMENTS

D840,499	S	2/2019	DiTullio et al.	
10,544,575	B1 *	1/2020	DiTullio	E03F 1/003
11,028,569	B2 *	6/2021	Spires	E03F 5/14
2005/0074288	A1 *	4/2005	Moore, Jr.	E03F 1/003 405/46
2005/0111915	A1 *	5/2005	Moore, Jr.	E03F 1/003 405/49
2006/0012166	A1	1/2006	Siferd et al.	
2007/0077122	A1 *	4/2007	Birchler	E03F 1/003 405/48
2007/0081860	A1	4/2007	Goddard et al.	
2010/0329788	A1	12/2010	Moore, Jr.	
2010/0329789	A1 *	12/2010	Coppes	E03F 1/003 405/49
2011/0020065	A1	1/2011	Moore, Jr. et al.	
2011/0200391	A1	8/2011	Mailhot et al.	
2011/0293370	A1	12/2011	Moore, Jr. et al.	
2013/0075315	A1	3/2013	Potts	
2016/0084406	A1	3/2016	Potts et al.	
2016/0186423	A1	6/2016	Coppes et al.	
2016/0326033	A1	11/2016	Potts	
2017/0191251	A1	7/2017	Trude et al.	
2018/0044905	A1	2/2018	Potts et al.	
2018/0087258	A1	3/2018	Holbrook et al.	
2018/0238039	A1	8/2018	Vitarelli et al.	
2018/0319686	A1	11/2018	Potts et al.	
2023/0012614	A1 *	1/2023	Douglass	E03F 1/003
2023/0257986	A1 *	8/2023	Douglass	B65D 88/76 220/567.1

OTHER PUBLICATIONS

Prinsco Pro4 Onsite Chamber. Datasheet[Online]. prinsco.com 2022. [Published on Jul. 12, 2022] [Retrieved on Jul. 12, 2023]. Retrieved from the Internet: <URL:https://www.prinsco.com/wp-content/uploads/2022/07/Prinsco-Pro4-36-CompSheet_Broad-Market_v1_062122.pdf> (Year: 2022).*

Dobbins, Tim. Product Spotlight . . . Onsite Chamber System. Onsite Installer. Sep. 2022 [Online]. [Retrieved on Jul. 12, 2023]. Retrieved from the Internet: <URL:https://www.onsiteinstaller.com/editorial/2022/09/product-spotlight-customers-prompted-the-feature-set-of-new-pro4-onsite-chamber-system> (Year: 2022).*

* cited by examiner

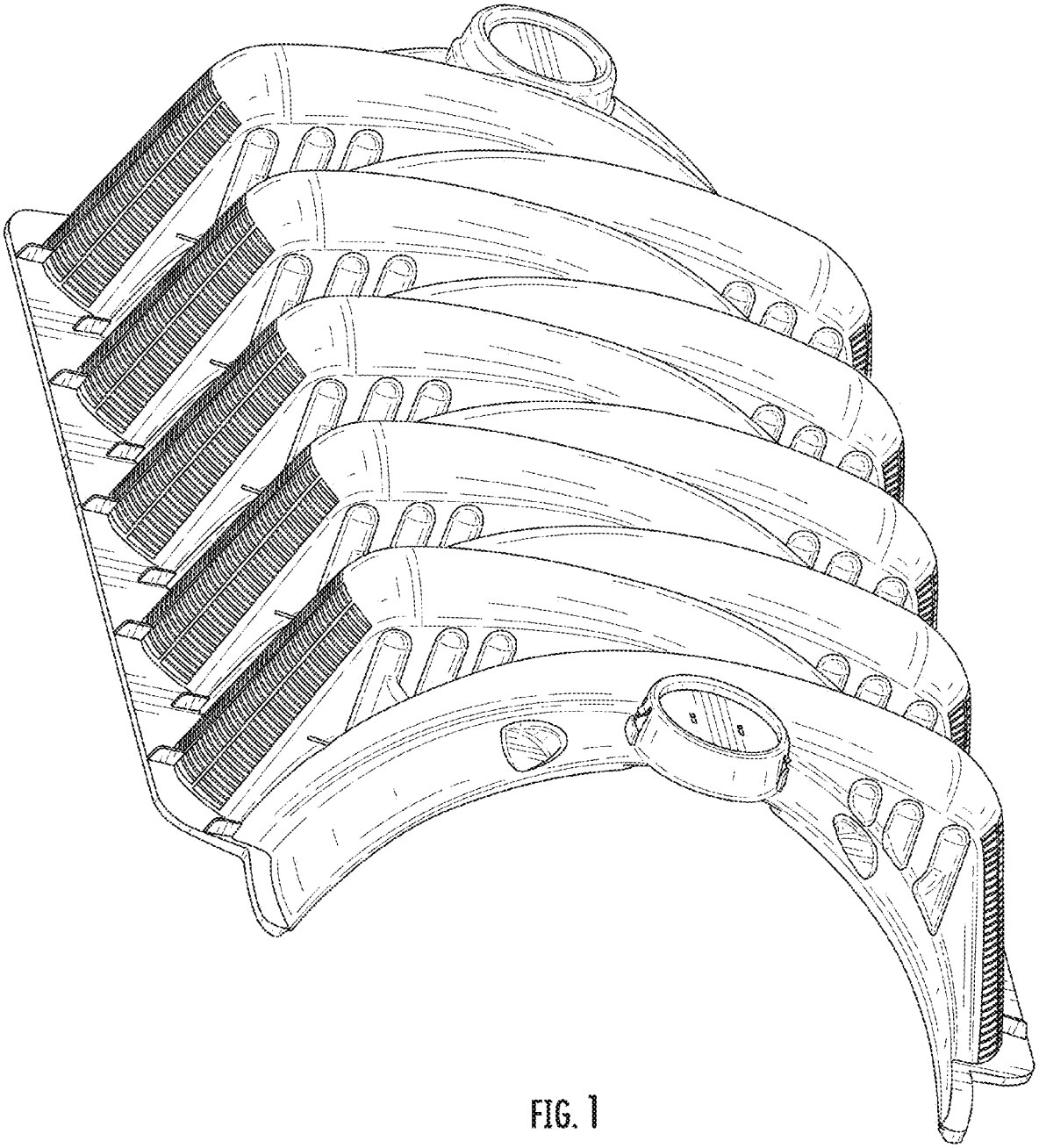

FIG. 1

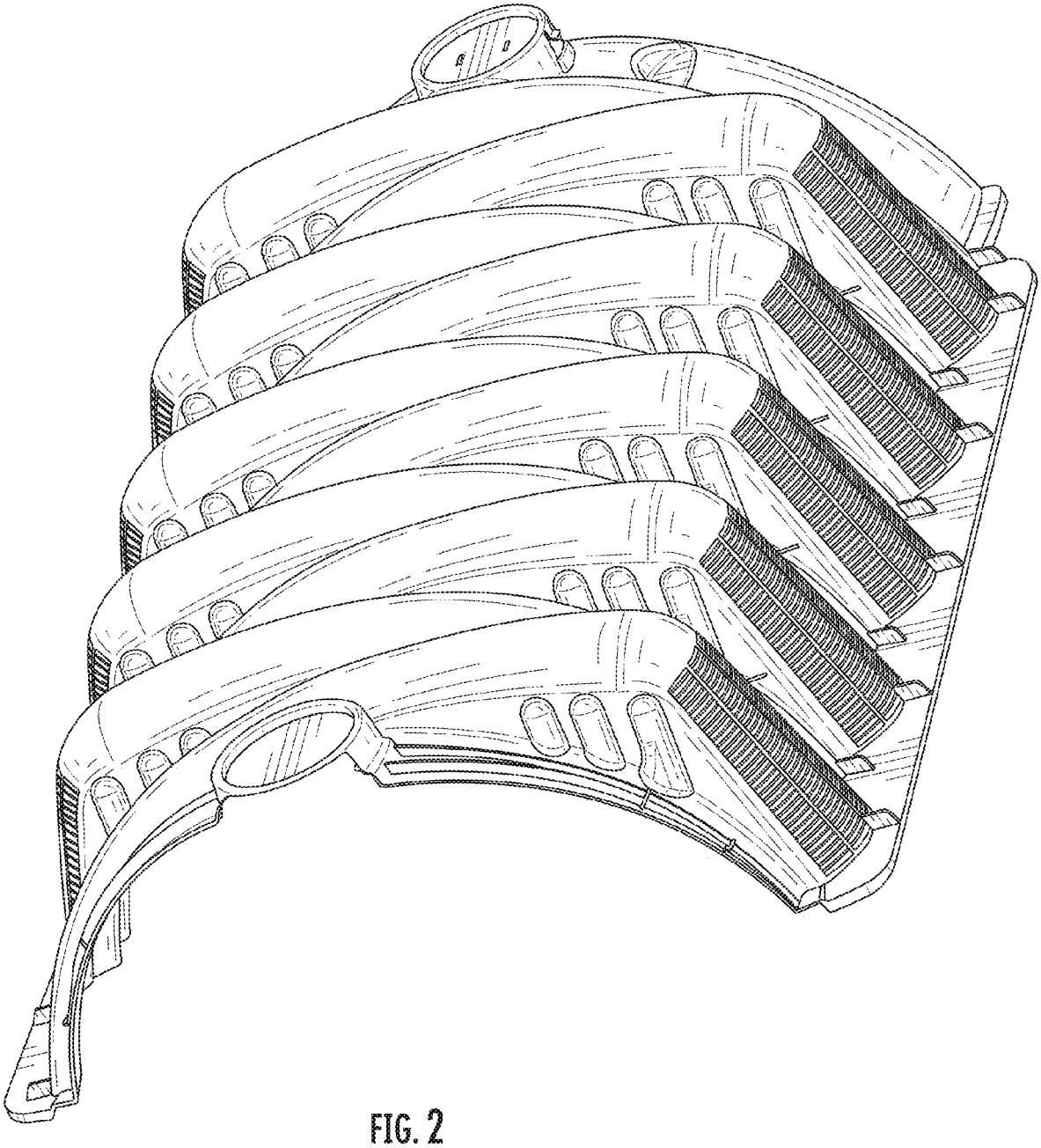

FIG. 2

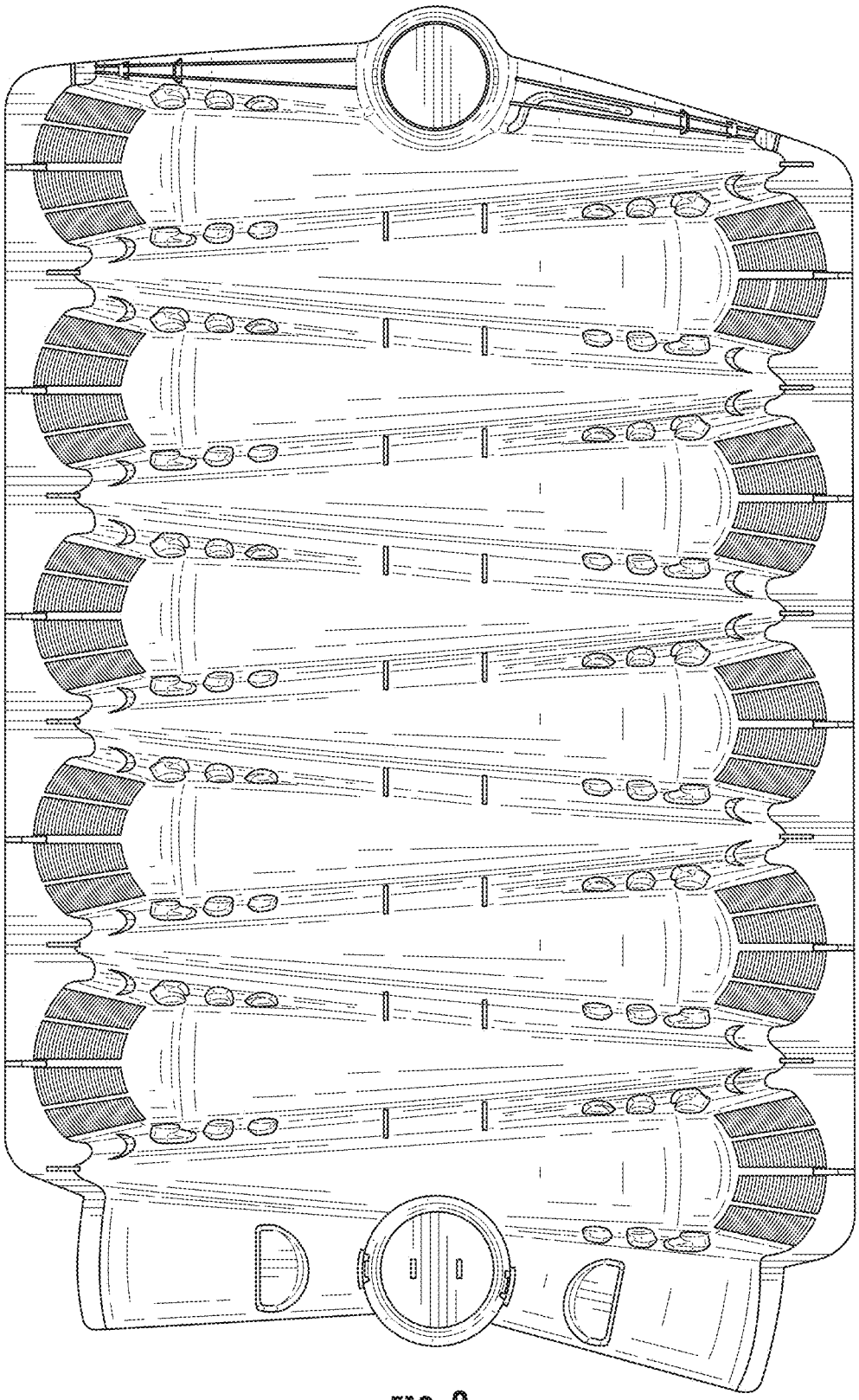

FIG. 3

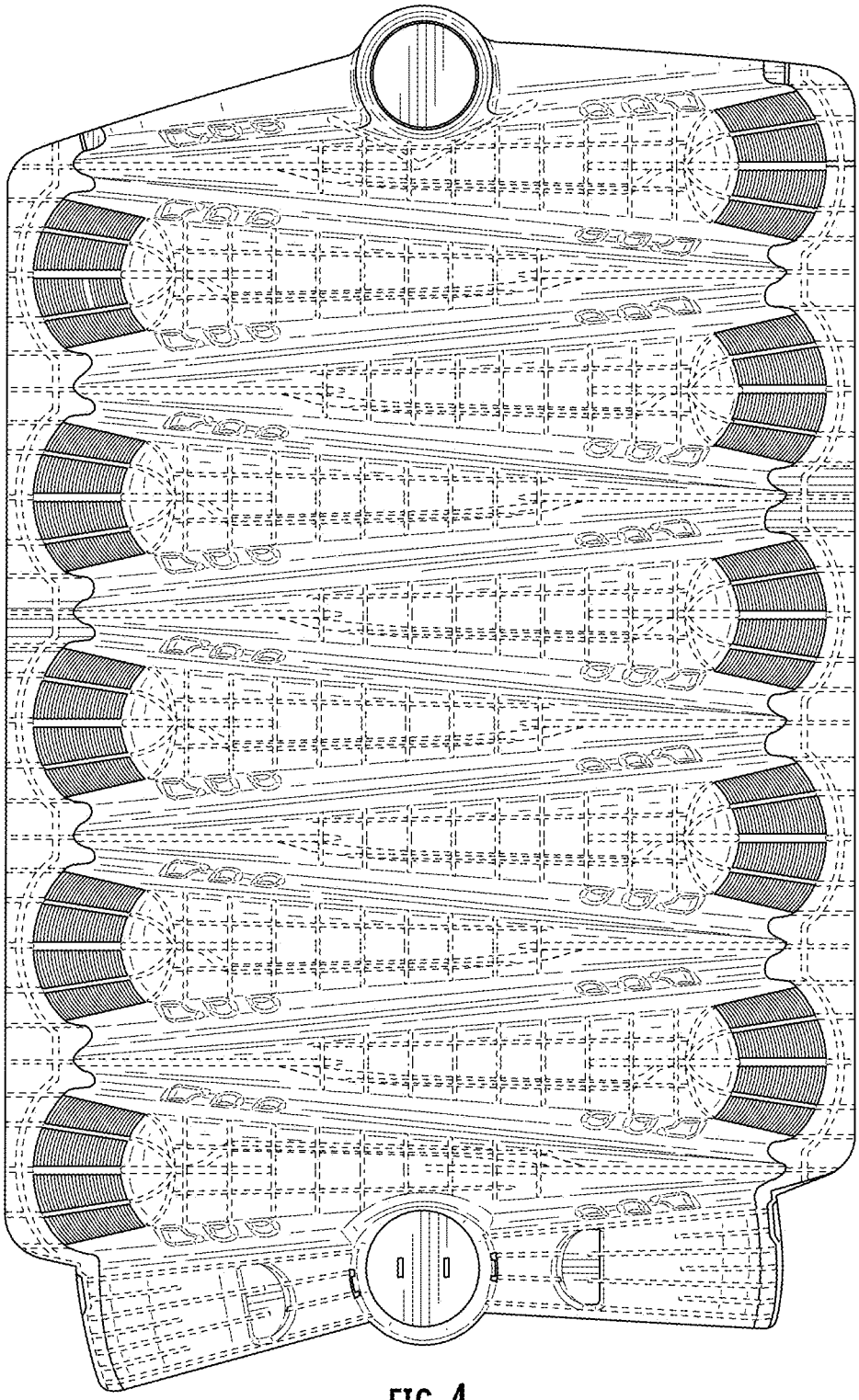

FIG. 4

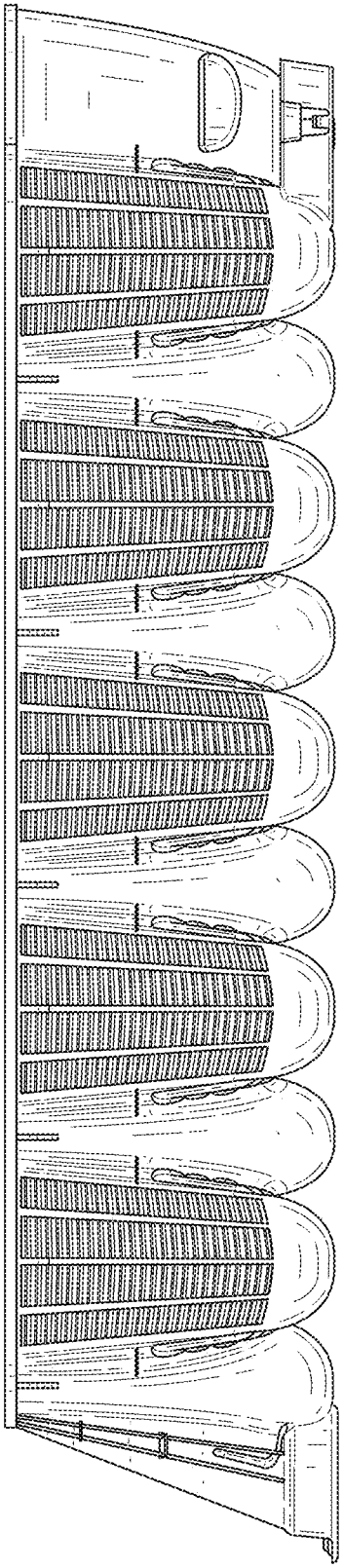

FIG. 5

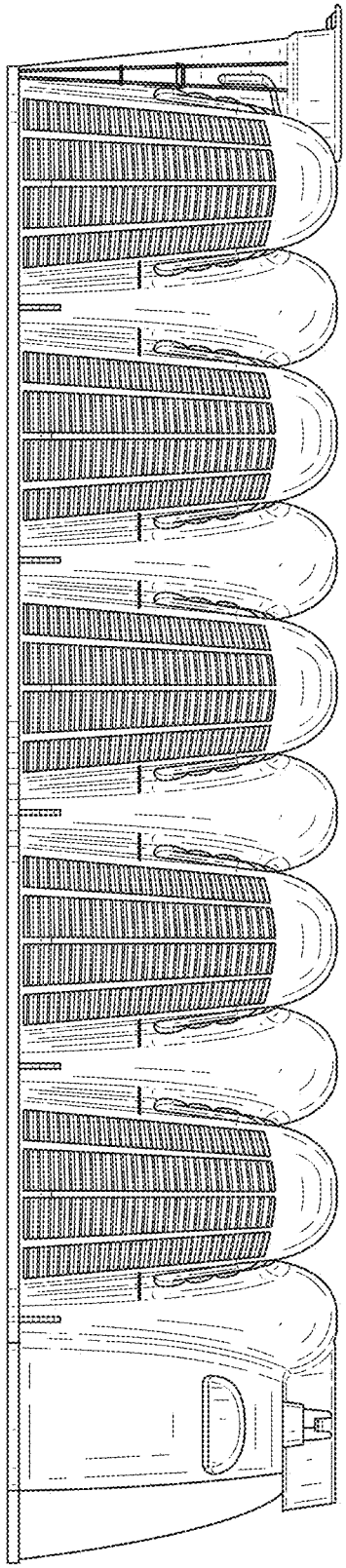

FIG. 6

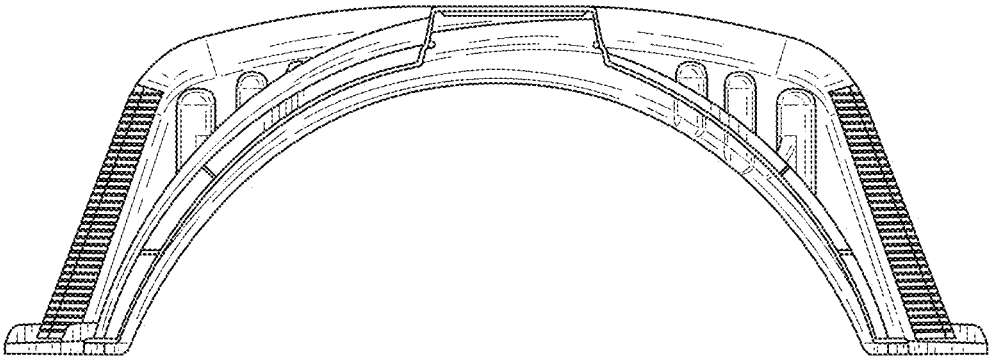

FIG. 7

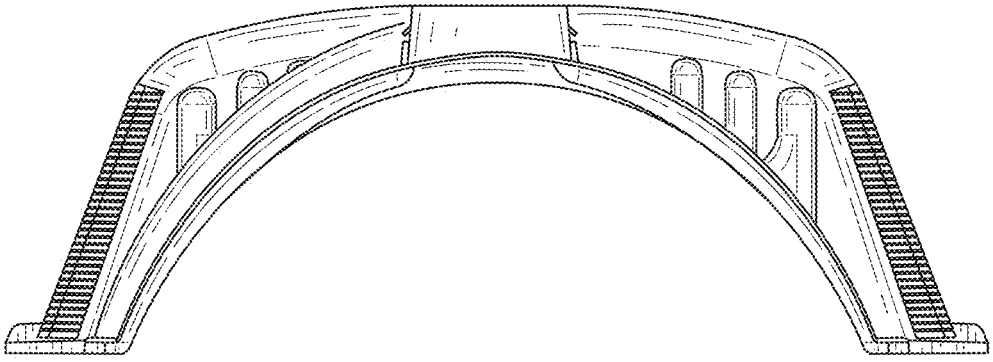

FIG. 8