Sept. 14, 1937. J. R. FEHR 2,092,963

REFRIGERATING APPARATUS

Filed Oct. 31, 1934 3 Sheets-Sheet 1

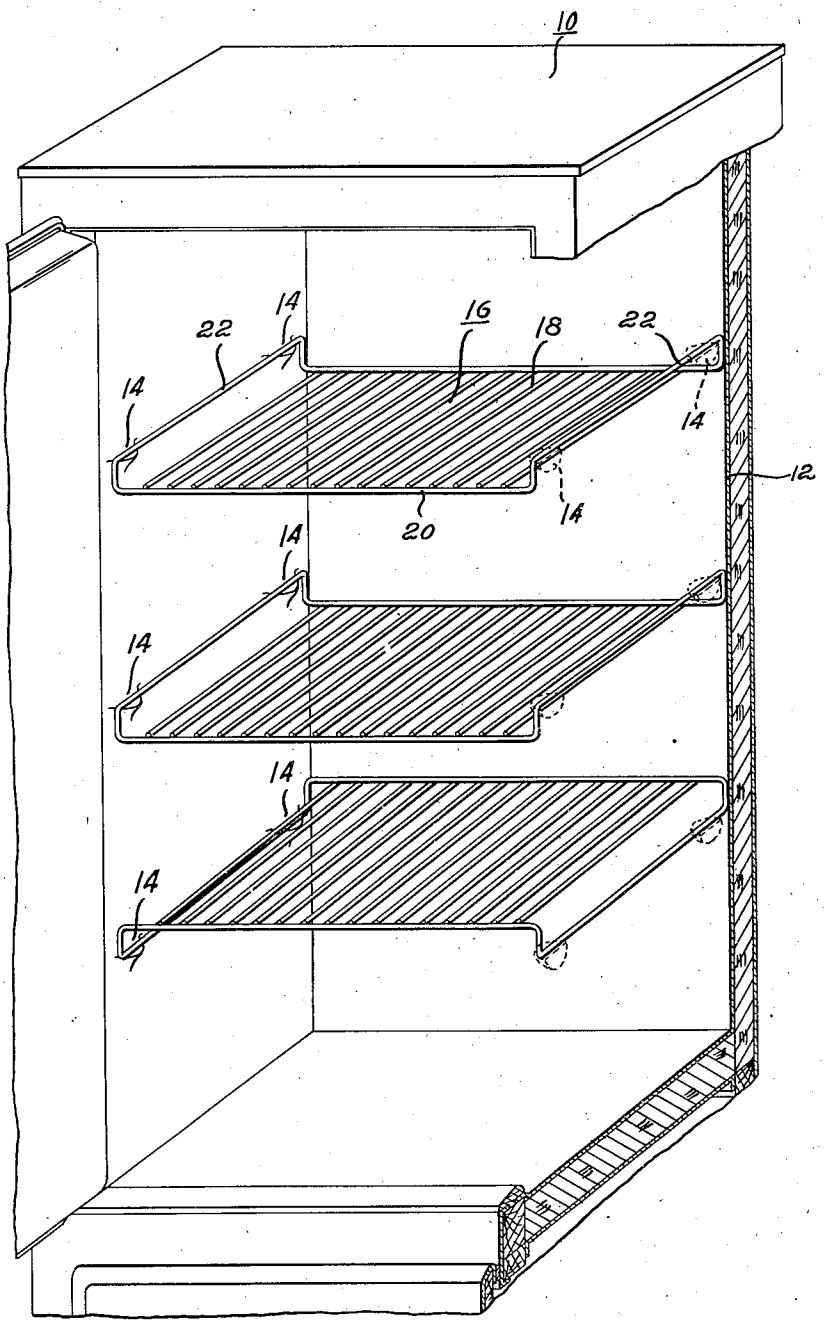

Fig. 1

INVENTOR.
John R. Fehr

BY
Spencer, Hardman & Fehr
ATTORNEY.

Sept. 14, 1937. J. R. FEHR 2,092,963

REFRIGERATING APPARATUS

Filed Oct. 31, 1934 3 Sheets-Sheet 2

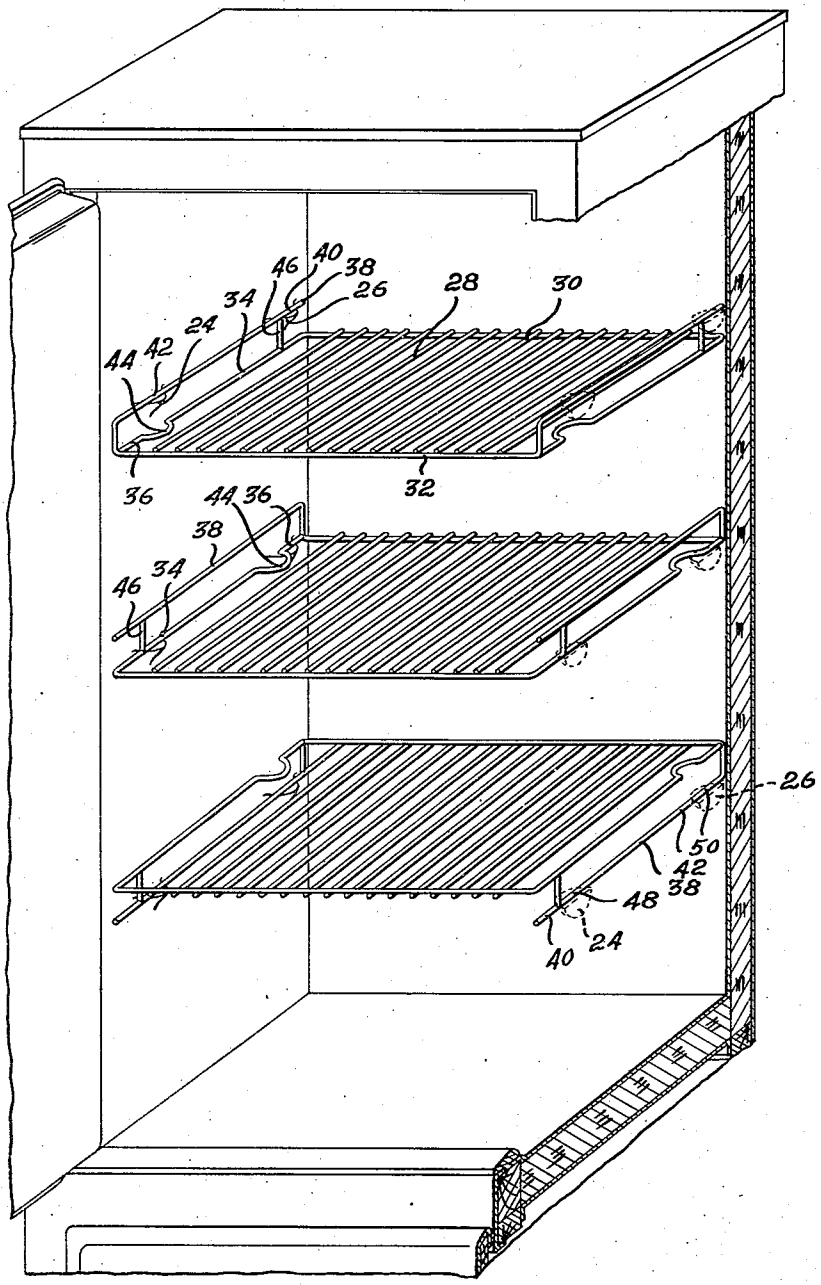

Fig. 2

INVENTOR.
John R. Fehr
BY
Spencer, Hardman & Fehr
ATTORNEY.

Sept. 14, 1937. J. R. FEHR 2,092,963

REFRIGERATING APPARATUS

Filed Oct. 31, 1934 3 Sheets-Sheet 3

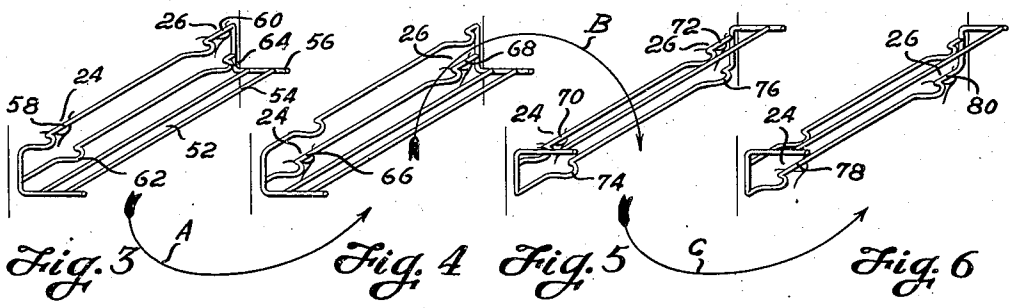

Fig. 3 Fig. 4 Fig. 5 Fig. 6

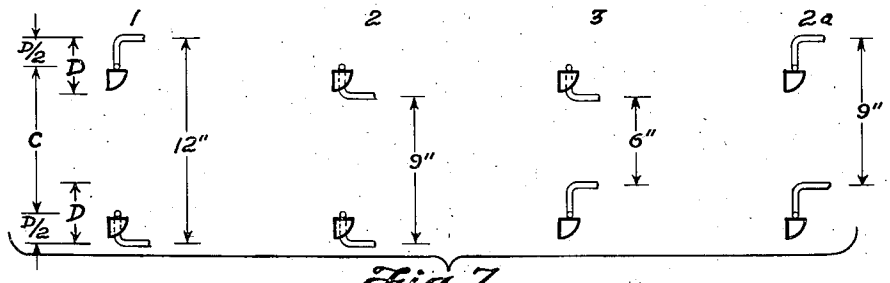

Fig. 7

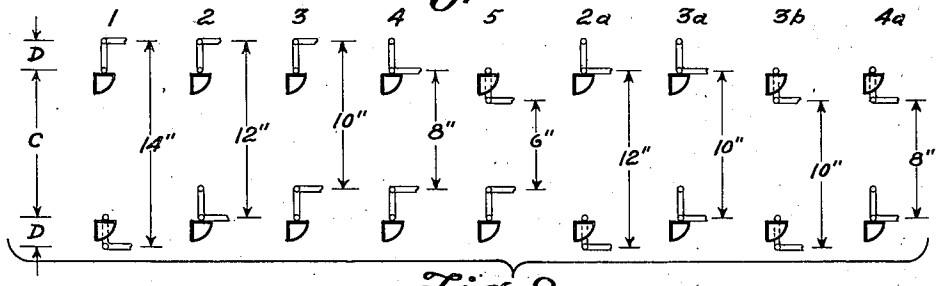

Fig. 8

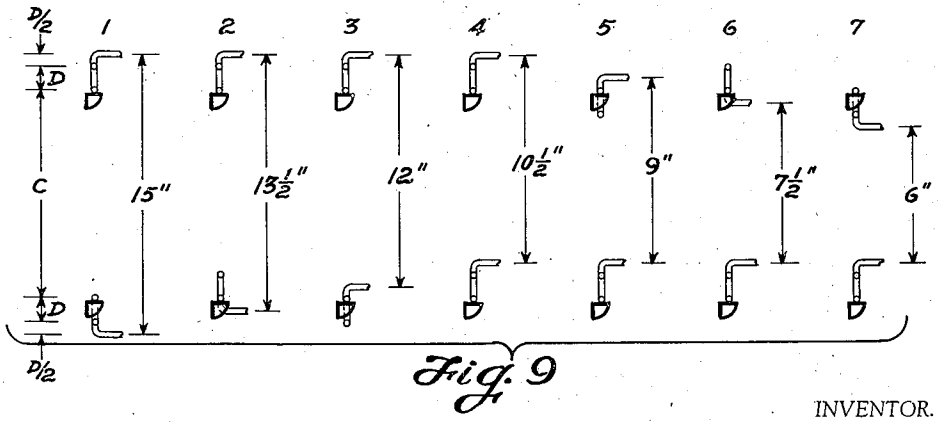

Fig. 9

INVENTOR.
John R. Fehr

BY
Spencer, Hardman & Fehr
ATTORNEY.

Patented Sept. 14, 1937 2,092,963

UNITED STATES PATENT OFFICE

2,092,963

REFRIGERATING APPARATUS

John R. Fehr, Dayton, Ohio, assignor to General Motors Corporation, Dayton, Ohio, a corporation of Delaware

Application October 31, 1934, Serial No. 750,871

1 Claim. (Cl. 211—147)

This invention relates to refrigerating apparatus and more particularly to refrigerator cabinet constructions having adjustable shelves.

Heretofore, in providing refrigerator cabinets with means for positioning one or more shelves therein at different levels in order to permit the user to adjust the shelf spacing to suit his particular needs, it has been customary to provide a plurality of sets of shelf supports on the inner wall of the refrigerator cabinet for each shelf in such a manner that a shelf may be positioned to cooperate with any one of the set of supports. It is also desirable in refrigerator cabinets for household use to avoid the use of shelf supporting devices which create corners or pockets which are difficult to clean in order to facilitate the maintenance of the cabinet in a sanitary condition. For this reason, it has been common to form slight depressions or protuberances in the inner wall of the cabinet itself for shelf supports. In a cabinet where each of the shelves is adjustable, and the shelf supports are formed in the inner wall, the number of protuberances or depressions is somewhat excessive, making the cost of manufacture of the cabinet high as well as increasing the labor of cleaning the refrigerator.

In order to obviate these difficulties, the present invention provides a refrigerator cabinet having adjustable shelves and having but a single set of shelf supports for each shelf. Adjustment of the vertical level of the shelf is provided in such a manner that it may be associated with the same set of shelf supports in each of a plurality of vertically spaced positions.

Further objects and advantages of the present invention will be apparent from the following description, reference being had to the accompanying drawings, wherein a preferred form of the present invention is clearly shown.

In the drawings:

Fig. 1 is a perspective view of a refrigerator cabinet embodying a simple form of the present invention, part of the cabinet being broken away;

Fig. 2 is a view like Fig. 1 showing a modified form of the invention;

Fig. 3 is a fragmentary view of a portion of a shelf and its shelf supports embodying a third form of the invention, showing the shelf in one position of adjustment;

Fig. 4 is a view corresponding to Fig. 3 showing the shelf in another position of adjustment;

Fig. 5 is a view corresponding to Fig. 3 showing the shelf in a third position of adjustment;

Fig. 6 is a view corresponding to Fig. 3 showing the shelf in a fourth position of adjustment;

Fig. 7 is a diagram showing the variations in shelf spacing and position possible with the simple form of the invention illustrated in Fig. 1;

Fig. 8 is a diagram showing the variations in shelf spacing and position possible with the form of the invention shown in Fig. 2; and

Fig. 9 is a diagram showing the variations in shelf spacing and position possible with the form of the invention shown in Figs. 3 to 6.

Referring now to Fig. 1, there is illustrated a refrigerator cabinet 10 having a liner 12 preferably formed of one piece of sheet metal which forms the inner walls of the refrigerator cabinet. The liner 12 is formed with struck-up protuberances 14 having flat tops on which a shelf may rest. The protuberances 14 are arranged in sets, one set for each shelf, and the protuberances may be arranged as shown so that they are symmetrical with respect to the vertical center line of the wall on which they are formed. Each of the shelves which it is desired to make adjustable is formed with a horizontal grid portion 16 formed of transverse rails 18. A boundary frame member 20 is secured to the rails 18 in a suitable manner, as by welding, and is preferably formed as an endless rail as shown. The end portions of the frame 20 are bent to form shelf support engaging portions 22 which are vertically spaced from the plane of the horizontal grid portion 16. In the form illustrated, the transverse rails 18 are secured to the top of the frame 20 at the front edge of the shelf and to the bottom of the frame 20 at the rear edge thereof.

In operation, adjustment of the shelves is provided by selecting the position in which the shelf is placed on the shelf supports 14, and in this embodiment of the invention, the shelf has two possible levels on the shelf supports 14. It may be located thereon with the horizontal portion 16 below the plane of the supports 14, as is the top shelf in Fig. 1, or it may be positioned with the horizontal portion 16 above the plane of the supports 14, as is the bottom shelf in Fig. 1. In order to change the position of the shelf, it is necessary only to remove it from the supports 14 and turn it upside down, preferably by turning it about an axis perpendicular to the side walls on which the supports 14 are located. By turning it in this manner, it is assured that the transverse rails 18 are always located on top of the frame member 20 at the front edge of the shelf so that there is nothing on which the bottom of articles may catch as they are removed from the refrigerator.

Referring now to Fig. 7, it will be seen that the

use of a shelf which is adjustable between two levels on the same shelf supports provides a variation in inter-shelf spacing in three increments from minimum to maximum. It has been found that for the average household use, there is a certain minimum usable inter-shelf space as well as a certain maximum usable inter-shelf space. In order to attain the greatest use of the adjustable feature of the shelves, it has been found desirable to provide adjustment such that the increments in inter-shelf spacings will be equal between maximum and minimum. In order to meet these conditions, certain relations between the spacing of the shelf supports and the construction of the shelves themselves may be established. If the maximum inter-shelf space be taken as A and the minimum shelf space as B, then the spacing C between adjacent sets of shelf supports should be the average between A and B or

$$\frac{A+B}{2}$$

Also, if N is the number of possible levels of the shelf on its set of shelf supports, then D, the increment of inter-shelf spacing, is equal to

$$\frac{A-B}{2N-2}$$

As an example of applying these relations, if A, the maximum usable inter-shelf spacing be taken as 12" and B, the minimum, be taken as 6", then C, the average, will be 9" and D, the increment, will be 3". It will, therefore, be necessary in order to satisfy these conditions, to construct the shelves so that the vertical difference between the two levels of the horizontal grid portion 16 be 3". Therefore the support engaging portion 22 must be spaced 1½" from the horizontal portion 16. The slight variation from these actual values which is introduced by the finite thickness of the support engaging portion 22 of the frame rail 20 is usually so small that it is disregarded here.

Referring now to Fig. 2, there is illustrated a second form of the invention in which the shelf has three possible levels of vertical adjustment on one set of shelf supports. In this form of the invention, the cabinet construction is the same as in Fig. 1 except that the protuberances 24 and 26 are unsymmetrical with respect to the vertical center line of the side walls of the inner liner. Thus, the rear protuberance 26 is nearer to the rear edge of the side wall than the front protuberance 24 is to the front edge of the side wall. The shelves in this form of the invention may comprise a horizontal grid portion formed of the transverse rails 30 which, as shown, are secured to the same side of the boundary frame member 32 at both the front and rear edges. The frame member 32 is provided at the end of the shelves adjacent the side walls of the refrigerator with support engaging portions 34 and 36 in substantially the same plane as the horizontal portion 28. An additional rail member 38 is provided to form other support engaging portions 40 and 42 which are vertically spaced from the plane of the grid portion 28. In vertical register with the support engaging portion 42, there is formed adjacent the support engaging portion 36 a support clearing portion 44 which is preferably an off-set formed by bending the boundary frame member 32 in the manner shown. Likewise, at the opposite edge of the shelf, the rail 38 is secured to the frame member 32 by a vertical post 46 in a manner to provide a support clearing portion between the free end of the rail 38 and the frame member 32.

The drawing illustrates the three possible levels of the shelf with respect to the shelf supports. The lowermost shelf level is obtained when the shelf is mounted on the supports 24 and 26 in the position in which the top shelf is shown. In this position, the horizontal portion 28 is positioned below the support engaging portions 40 and 42, which in turn engage the supports 26 and 24 respectively. The shelf may be inserted in this position by raising the front end of the shelf above the supports 24 and first engaging the support engaging portions 40 with the support 26 as shown. The forward edge of the shelf may then be lowered permitting the support clearing portions 44 to pass the supports 24, thus engaging the support engaging portions 42 and supports 24. The intermediate level of the shelf in which the middle shelf is illustrated is obtained by turning the shelf 180° about a vertical axis from the position illustrated by the top shelf. The shelf may then be inserted in the cabinet above the supports 24 and 26 and lowered to rest the support engaging portions 34 and 36 on the supports 24 and 26. It will be noted that due to the unsymmetrical spacing of the supports 24 and 26 from their adjacent edges of the side wall that the support clearing portion 44 will not register with the rear support 26. In order to obtain the upper-most level of the shelf illustrated by the lower shelf in Fig. 2, the shelf may be turned 180° about a horizontal axis perpendicular to the back wall of the cabinet and then inserted in the cabinet above the supports 24 and 26 and lowered to rest thereon. In this position, the rails 38 again engage the supports 24 and 26 but at different support engaging portions 48 and 50.

The possible variations in the inter-shelf spacing which may be achieved by the second form of the invention are illustrated in Fig. 8. If it is desired to vary the inter-shelf space in equal increments from minimum to maximum, suitable values are substituted in the relations established in connection with the form shown in Fig. 1. As a numerical example, the maximum A may be taken as 14" and the minimum B as 6". The number of possible shelf levels is, of course, three. The spacing C for the shelf supports then becomes 10" and the increment of inter-shelf spacing becomes 2". It will be seen that a three level shelf gives 5 possible inter-shelf spacings as shown by the diagrams 1 to 5 inclusive in Fig. 8. The three intermediate inter-shelf spacings may be duplicated in other positions of the shelves as shown in diagrams 2A, 3A, 3B, and 4A. Thus, it is possible to maintain a desired inter-shelf spacing corresponding to diagrams 2, 3 or 4 while varying an inter-shelf spacing above or below the same.

Referring now to Figs. 3 to 6 inclusive, a further modification of the invention is illustrated which does not substantially increase the cost of the shelf over the form illustrated in Fig. 2, but which provides four possible levels for each shelf. In this form of the invention, the supports 24 and 26 are unsymmetrically spaced as in Fig. 2. The shelf is formed with a horizontal grid portion 52 formed of transverse rails 54. The rails 54 are illustrated as being mounted flush with the boundary frame member 56 at both forward and rear edges. The boundary frame member 56 is provided at its ends adjacent the side walls with a plurality of support engaging and support

clearing portions which are situated in two planes, both vertically spaced from the plane of the horizontal portion **52**. These engaging and clearing portions are duplicated at the edge of the shelf not shown so as to be symmetrical about a vertical median plane perpendicular to the back wall. In the position of the shelf shown in Fig. 3, which is the lower-most level, the shelf rests with support engaging portions **58** and **60** engaging the supports **24** and **26**. The support clearing portions **62** and **64** which are in the other plane are in vertical register with the support engaging portions **58** and **60** and permit the shelf to be lowered past the supports to the position described. In order to raise the shelf one step, the shelf is turned 180° in the direction of the arrow A so that the shelf engaging portions **66** and **68** in the other plane engage the supports **24** and **26** respectively. In order to raise the shelf another step, it is rotated next in the direction of the arrow B so that support engaging portions **70** and **72** engage the supports **24** and **26** respectively. The portions **70** and **72** comprise the same rail portions as the portions **66** and **68** but the other engaging portions in each case are the opposite surfaces of the rail. In this position, the support clearing portions **74** and **76** are in vertical register with the support engaging portions **70** and **72** and permit the shelf to be lowered sufficiently after insertion to engage the portions **70** and **72** with the supports. In order to obtain the highest level of the shelf, the shelf is again turned 180° in the direction of the arrow C, when the support engaging portions **78** and **80** will engage supports **24** and **26** respectively. The portions **78** and **80** are likewise merely the surfaces of the rail opposite the portions **58** and **60**.

Fig. 9 illustrates the 7 possible inter-shelf spacings with the present form of the invention. If the maximum A be taken as 15" and the minimum B as 6", the spacing for the supports becomes 10½", and the increment of inter-shelf spacing becomes 1½". With a four level shelf there will also be 9 other possible arrangements in which the inter-shelf spacings of Diagrams 2 to 6 will be duplicated permitting maintenance of each of these inter-shelf spacings while varying the inter-shelf space above or below the same.

It will be understood that various modifications of the invention may be made, for example, the invention is adapted to use with other forms of support such as hooks or pegs attached to the side walls. Likewise, any of the constructions of shelf grid illustrated may be used, or other forms of grid may be used with any of the shelf constructions illustrated. Also, while the shelf supports have been shown as positioned in the side walls of the cabinet, the invention is not limited to this feature, inasmuch as the shelf supports may be partly or entirely positioned on other walls of the cabinet. Although but three specific forms have been illustrated, it will be understood that the principles disclosed may be carried further to provide shelves having a greater number of possible shelf levels. In the form illustrated in Fig. 2, the support clearing portions at the rear edge of the top shelf may be formed in the same manner as those formed at the front edge thereof as is illustrated in Figs. 3 to 6. While it is preferred to make each of the shelves in a cabinet adjustable as described, it will be understood that this is not essential and cabinets may be constructed embodying the present invention together with one or more non-adjustable shelves.

While the form of embodiment of the invention as herein disclosed constitutes a preferred form, it will be understood that other forms might be adopted, all coming within the scope of the claim which follows.

What is claimed is as follows:

In a refrigerator cabinet having horizontally aligned shelf supports on opposed upright walls thereof, a shelf having means whereby it may be supported by said supports in any one of four or more horizontal planes relative to the supports within said cabinet, said shelf comprising a horizontal portion forming an article support and said means comprising a plurality of support engaging portions formed integral with said horizontal article support portion thereof, certain of said support engaging portions of said shelf being vertically spaced from the integral horizontal article support portion thereof, said shelf being supportable on said aligned shelf supports by one of said plurality of sets of shelf support engaging portions with the horizontal article support portion thereof disposed in a normal predetermined vertical plane relative to said shelf supports, and said shelf being selectively rotatable 180° about a vertical axis or turnable 180° about a horizontal axis to support same on said aligned shelf supports by another of said plurality of sets of shelf support engaging portions to position its horizontal article support portion in either of three or more spaced vertical planes relative to said normal predetermined plane thereof.

JOHN R. FEHR.