Nov. 27, 1923. 1,475,687

F. A. COBB

COATING OR INKING DEVICE

Filed Feb. 15, 1922

Fig. 1.

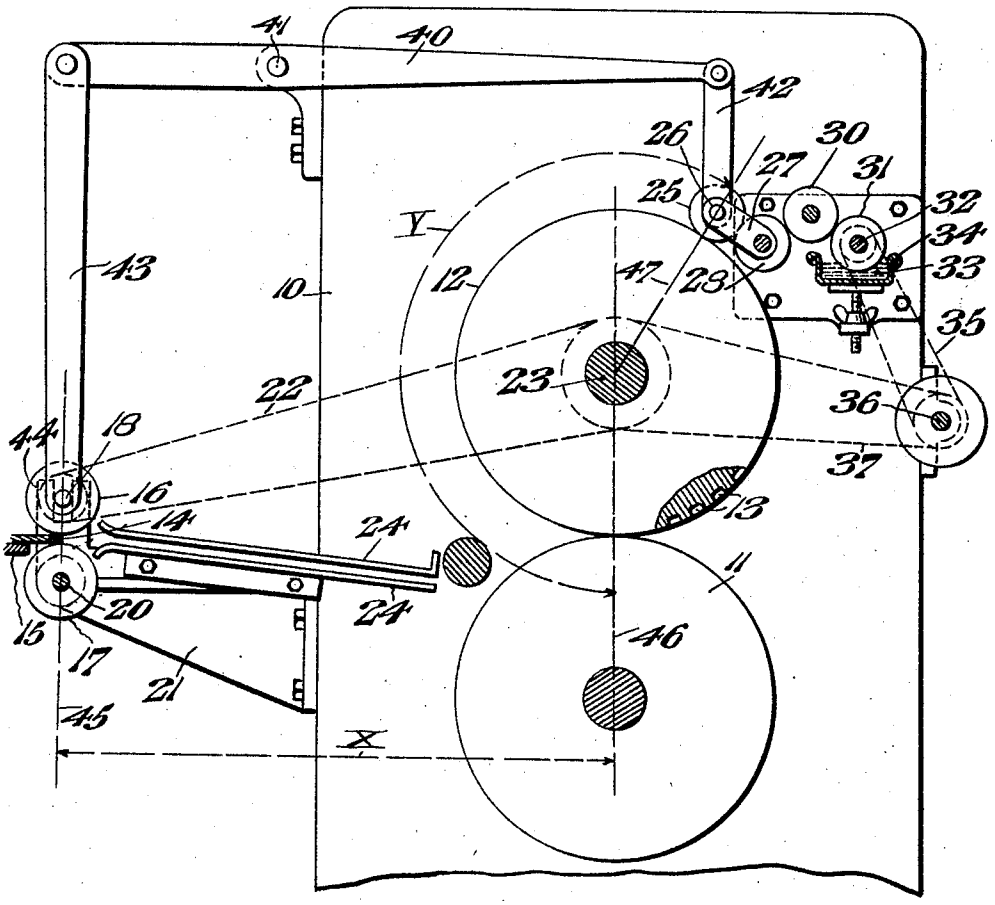

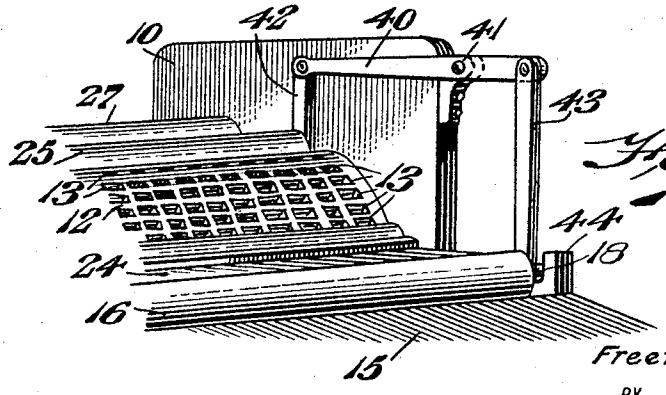

Fig. 2.

INVENTOR
Freeman A. Cobb.
BY
Robert M. Barr.
ATTORNEY

Patented Nov. 27, 1923. 1,475,687

UNITED STATES PATENT OFFICE.

FREEMAN A. COBB, OF WILMINGTON, DELAWARE, ASSIGNOR, BY MESNE ASSIGNMENTS, TO NATIONAL VULCANIZED FIBRE CO., OF WILMINGTON, DELAWARE, A CORPORATION OF DELAWARE.

COATING OR INKING DEVICE.

Application filed February 15, 1922. Serial No. 536,681.

To all whom it may concern:

Be it known that I, FREEMAN A. COBB, a citizen of the United States, and a resident of Wilmington, county of New Castle, and State of Delaware, have invented certain new and useful Improvements in Coating or Inking Devices, of which the following is a specification.

Some of the objects of the present invention are to provide an improved mechanism for applying a liquid coating to sheets of fibre or any other material; to provide means for coating an embossed surface for decorating purposes; to provide means for uniformly applying a liquid coating to a design embossed on fibre or other material; to provide a liquid coating device for sheets of material arranged to distribute on an applying roll a coating corresponding in length to the length of the respective sheets of material; to provide means for preventing a blurred or heavier coated portion while applying a liquid coating to a sheet of material; to provide means controlled by the length of a sheet of material for periodically applying a coating to an applying or engraved roll; and to provide other improvements as will hereinafter appear.

In the accompanying drawings, Fig. 1 represents a sectional elevation of a printing attachment for rolls embodying one form of the present invention; and Fig. 2 represents a perspective of one end of the machine shown in Fig. 1.

Referring to the drawings, one form of the present invention is shown as applied to an embossing machine comprising generally a main frame 10, a bed roll 11, and an embossing printing roll 12, the two rolls 11 and 12 having parallel axes arranged so that the two operate in surface contact, and being driven by any suitable power transmitting means, which it is believed unnecessary to here describe or illustrate. The roll 12, in accordance with the present invention, may be of any suitable type for applying ink or any other coating to a material passed between the rolls 11 and 12, but in the present construction it is illustrated by way of example as an embossing roll having an ornamental design 13 negatively arranged upon its peripheral surface whereby such design is pressed into the surface of a fibre sheet 14 in positive form as such material traverses the said rolls.

In order to support and feed the material 14, such as long or short lengths of fibre, the machine is provided with a material receiving table 15 having one side or end thereof arranged in relatively close proximity to a pair of rolls 16 and 17 rotatably supported in superposed relation respectively upon shafts 18 and 20 which are mounted in suitable bearings upon end brackets 21 and so spaced as to frictionally engage the material to feed it in the desired manner. The shaft 18 and the roll 16 are arranged to be driven by a chain 22 from the main driven shaft 23, while the roll 17 is either of the idle or gear-driven type to serve as a suitable support. Suitable rigid spaced plates 24 serve as a guide passage for the material from the rolls 16 and 17 to the proper delivery location between the roll 12 and the bed roll 11.

For the purpose of applying ink or other coating to the surface of the roll 12, a transfer roll 25 is provided having a length substantially that of the roll 12 and keyed or otherwise made fast to a spindle 26 which is supported at its ends in a pair of links 27 in such a manner that the roll 25 normally contacts with the surface of the roll 12 and also with one of a pair of coating conveying rolls 28 and 30. These rolls 28 and 30 are rotatably supported in surface contact and rotate under the action of a coating applying roll 31 which is fixed to a driven shaft 32 so mounted as to hold the roll 31 in surface contact with the roll 30 and also partially submerged in the coating material 33 in its reservoir 34. Power is preferably transmitted to the shaft 32 by a chain 35 from a counter-shaft 36, which is driven by a chain 37 from the main driven shaft 23. It will be understood that the foregoing power transmitting means is only by way of example and may be variously arranged and constructed to carry out the desired function.

In the application of coating in the form of ornamentation or designs and more particularly in embossing work, such as embossing and coating fibre to produce colored or other distinctive designs, it has been found that while the roll 12 has a continuous imposed surface of coating material the length of material to be coated is often such that only a portion of the coating carried by the roll 12 is applied thereto. In other words,

a sheet of material contacts with and leaves the roll 12 before the entire circumference of that roll has come into contact with it and consequently, before the next sheet of material reaches the roll 12, a portion of the coated surface has travelled beyond the line of application and returns to the transfer roll 25 where it receives another coating. The result is the coated surface approaching another sheet of material is not of uniform thickness as one portion has a double application of the coating, and when applied to the sheet of material gives a very undesirable appearance, namely, one finished uniform portion and another portion contrastingly heavier or blurred.

For the purpose of overcoming and preventing the foregoing, one form of the present invention consists in providing means for periodically bringing the transfer roll 25 into contact with the roll 12 for a predetermined time dependent upon the lengths of the material sheets being fed through the machine. In the present construction the transfer roll links 27 have a pivotal connection with the roll 28 so that the transfer roll is free to swing concentrically with respect to the roll 28 towards and away from the roll 12. Normally the transfer roll 25 is maintained out of contact with the roll 12 by means of a pair of levers 40 pivoted differentially at 41 to a fixed part and having their long arms connected respectively by links 42 with the ends of the spindle 26. The short arms of the levers 40 connect respectively with depending arms 43 which carry between them, at their lower ends, the shaft 18 of the feed roll 16. The shaft 18 is guided by and maintained properly positioned by bifurcated extensions 44 of the bracket 21. In the present arrangement the weight of the roll 16 and its associated parts in connection with the apportioned levers 40 is sufficient to slightly overbalance the roll 25 and its parts, and consequently when there is no material between the rolls 16 and 17, the transfer roll 25 will be held out of contact with the roll 12, that is, in non-inking position. Thus, the aforesaid construction functions to hold the transfer roll 25 in position to apply ink or other coating to the roll 12 only as long as there is a sheet of material passing between the feed rolls 16 and 17, and it therefore becomes impossible for any portion of the roll 12 to receive superposed coatings. This functioning, however, is dependent upon the relative positions of the feeding and applying rolls 16 and 12 with respect to the circumferential location of the transfer roll 25, as without such predetermined relative arrangement either a portion of the sheet will be uncoated or the coated part of the roll 12 may reach the line of application before the sheet of material does, in which latter case a double coating will result upon a part of the said roll 12. To eliminate such improper functioning of the apparatus the center line 45 of the rolls 16 and 17 is spaced from the center line 46 of the rolls 11 and 12 by a distance X which may be equal to but preferably slightly less than the circumferential distance Y from the center line 46 to the center line 47 of the roll 12 and transfer roll 25. It therefore follows that the roll 12 is always coated sufficiently to cover the length of the fibre sheet being fed to the machine.

It will now be apparent that a complete unitary structure has been devised for applying a coating, in the form of an ink, a coloring medium or any other liquid, to sheets of material in a uniform manner for finishing, decorating, or any other surface treating conditions. Furthermore, by the present invention the coating of uneven surfaces, such as embossed designs on fibre or other material, can be accomplished without the formation of blurred and irregular portions, and insuring an even disposal of the coating notwithstanding depressions or raised parts as a part of the design. Furthermore, the time of application of the coating is directly controlled by the length of the sheet so that it is immaterial whether short or long lengths of the material are fed to the machine.

Having thus described my invention, I claim:

1. In a coating machine, the combination of a supply of coating, a roll for applying said coating to a length of material, means for uniformly distributing said coating upon said roll, a device for feeding said material into contact with said roll, and means operated by said feeding device for controlling said distributing means.

2. In a coating mechanism, the combination of a supply of coating, a roll for applying said coating to a length of material, means for uniformly distributing said coating upon said roll, a device for feeding said material into contact with said roll, and means controlled by said feeding device for periodically rendering said distributing means inoperative.

3. In a coacting machine, the combination of a supply of coating, a roll for applying said coating to a length of material, a transfer roll arranged to receive coating from said supply and mounted for movement into and out of contact with said applying roll, to uniformly distribute coating on said applying roll, and means located in the path of material fed to said applying roll for normally holding said transfer

roll out of contact with said applying roll, said means being arranged to be actuated by said material to hold said transfer roll in contact with said applying roll for a predetermined time.

4. In a coating machine, the combination of a supply of coating, a roll for applying said coating to a length of material, a transfer roll arranged to receive coating from said supply and mounted for movement into and out of contact with said applying roll to uniformly distribute coating on said applying roll, and means for causing said transfer roll to be held in contact with said applying roll only long enough to apply a circumferential coating having a length equal to the length of a sheet of material to be coated.

5. In a coating machine, the combination of a roll for applying coating to a sheet of fibre, means for uniformly distributing said coating upon said roll, and means for causing said distributing means to operate only long enough to apply a circumferential coating having a length equal to the length of said sheet of material.

6. In a coating machine, the combination of a supply of coating, an embossing roll for applying said coating to a sheet of fibre, means for uniformly distributing said coating upon said roll said distributing means being located a predetermined circumferential distance from the meeting line of said material and said roll, and means, having a part arranged to contact with said sheet at a point removed from said meeting line a linear distance substantially equal to said predetermined circumferential distance, for causing said distributing means to apply coating to said embossing roll while said material is in contact with said part.

7. In an inking or coating machine for vulcanized fibre, the combination of two fixed rolls arranged to rotate in contact with each other, means for distributing coating upon one of said rolls, and means for causing said distributing means to apply a length of coating to said roll equal to the length of material to be coated.

8. In an inking or coating machine for vulcanized fibre, the combination of a bed roll, a printing roll mounted to contact therewith, an inking roll for distributing ink upon said printing roll, and means operated by material being fed to said printing roll for moving and holding said inking roll in contact with said printing roll, said moving means being arranged to be automatically released when said material passes out of contact therewith.

Signed at Wilmington, in the county of New Castle, and State of Delaware, this 9th day of February, 1922.

FREEMAN A. COBB.