(12) INTERNATIONAL APPLICATION PUBLISHED UNDER THE PATENT COOPERATION TREATY (PCT)

(19) World Intellectual Property Organization
International Bureau

(43) International Publication Date
17 October 2013 (17.10.2013)

WIPO | PCT

(10) International Publication Number
WO 2013/154444 A2

(51) International Patent Classification: Not classified

(21) International Application Number:
PCT/PL2013/000041

(22) International Filing Date:
27 March 2013 (27.03.2013)

(25) Filing Language: English

(26) Publication Language: English

(30) Priority Data:
P.398791 11 April 2012 (11.04.2012) PL

(71) Applicant: **INSTYTUT ŁĄCZNOŚCI** [PL/PL]; Państwowy Instytut Badawczy, ul.Szachowa 1, PL-04-894 Warszawa (PL).

(72) Inventors: **GODLEWSKI, Paweł**; ul. Jałowcowa 27 m.6, PL-04-955 Warszawa (PL). **KOBUS, Ryszard**; ul.Pablo Nerudy 5 m.20, PL-01-926 Warszawa (PL). **CHOJNACKI, Bogdan**; ul.Powstańców Śląskich 85 m.32, PL-01-355 Warszawa (PL). **NIECHODA, Kazimierz**; ul.Pułtuska 6/10 m.6, PL-04-331 Warszawa (PL). **OLECHOWSKI, Krzysztof**; ul.Umińskiego 10 m.3, PL-03-909 Warszawa (PL). **KLIŚ, Paweł**; ul.Keilecka 48 m.10, PL-02-530 Warszawa (PL). **GRUNT, Marek**; ul.Kołobrzeska 14a/5, PL-74-400 Szczecinek (PL).

(81) Designated States *(unless otherwise indicated, for every kind of national protection available)*: AE, AG, AL, AM, AO, AT, AU, AZ, BA, BB, BG, BH, BN, BR, BW, BY, BZ, CA, CH, CL, CN, CO, CR, CU, CZ, DE, DK, DM, DO, DZ, EC, EE, EG, ES, FI, GB, GD, GE, GH, GM, GT, HN, HR, HU, ID, IL, IN, IS, JP, KE, KG, KM, KN, KP, KR, KZ, LA, LC, LK, LR, LS, LT, LU, LY, MA, MD, ME, MG, MK, MN, MW, MX, MY, MZ, NA, NG, NI, NO, NZ, OM, PA, PE, PG, PH, PL, PT, QA, RO, RS, RU, RW, SC, SD, SE, SG, SK, SL, SM, ST, SV, SY, TH, TJ, TM, TN, TR, TT, TZ, UA, UG, US, UZ, VC, VN, ZA, ZM, ZW.

(84) Designated States *(unless otherwise indicated, for every kind of regional protection available)*: ARIPO (BW, GH, GM, KE, LR, LS, MW, MZ, NA, RW, SD, SL, SZ, TZ, UG, ZM, ZW), Eurasian (AM, AZ, BY, KG, KZ, RU, TJ, TM), European (AL, AT, BE, BG, CH, CY, CZ, DE, DK, EE, ES, FI, FR, GB, GR, HR, HU, IE, IS, IT, LT, LU, LV, MC, MK, MT, NL, NO, PL, PT, RO, RS, SE, SI, SK, SM, TR), OAPI (BF, BJ, CF, CG, CI, CM, GA, GN, GQ, GW, ML, MR, NE, SN, TD, TG).

Published:

— *without international search report and to be republished upon receipt of that report (Rule 48.2(g))*

(54) **Title**: METHOD AND SYSTEM FOR REMOTE MEASUREMENT OF AVAILABLE CAPACITY OF THE BATTERIES IN THE TELECOMMUNICATIONS POWER SYSTEM

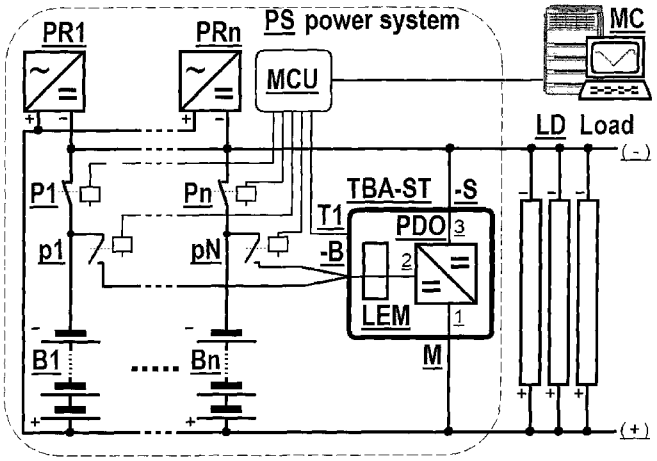

Fig. 1

(57) **Abstract**: Proposed method and system provide remote measurement of available capacity of the batteries, which are the reserve of energy in the telecommunications facilities, mainly those comprised in the critical telecommunications infrastructure. To initiate remotely individual discharge of each of at least two batteries in the power system (PS), the system negative bus (-) is connected to the battery (B1, Bn) through the individual high-current contactors (P1, Pn), replacing the common low-voltage switch, which are connected by the microprocessor control unit (MCU), which also controls the low-current contactors (p1, pN) connected to these batteries, and with the second contacts connected to the second input (B) of the controlling-measuring device (TBA-ST). This device is permanently installed in the power system (PS) and at the command from the monitoring center (MC) it measures using the method of controlled discharge with constant current, the capacity of each of the batteries, disconnected by the microprocessor control unit from the power system during this operation.

WO 2013/154444 A2

Method and system for remote measurement of available capacity of the batteries in the telecommunications power system.

The present invention relates to a method and a system for remote measurement of available capacity of the batteries in the telecommunications power system, which are the energy reserve for the telecommunications facilities, mainly those comprised in the telecommunications critical infrastructure.

To ensure continuous operation of the technical infrastructure in the telecommunications network, uninterrupted power supply even in case of power failure in the power grid 230/400V is required. Therefore, a typical power system for the telecommunications equipment in the facility consists of the power station with the mains voltage rectifiers fed with 230/400V and the backup power source consisting of at least two chains of batteries, usually of nominal voltage of 48 V, connected to the energy receivers, i.e. the loads.

In known and commonly used power systems, at least two batteries are interconnected through the fuses and are connected to the outputs of the rectifier units (rectifiers) connected to the energy receivers, or loads, through common battery cut-out controlled by a microprocessor controller. The latter communicates with the centralized monitoring system of the power station. In normal operating conditions the rectifiers provide the energy receivers and the batteries with the "buffering voltage", and then the batteries fed with low preservative current are not discharged. In case of power failure in the power grid both batteries take the energy supply to the energy receivers, and after returning of voltage the rectifiers again provide power to the devices while charging both batteries. Energy security of the facility depends on the availability of energy in the power grid, and in case of deficiency - from the amount of energy stored in both batteries. Manufacturers determine the battery life time of 5-10-20 years (depending on technology), but disadvantageous operating

conditions cause their degradation, i.e. reduction of available capacity below 80% of nominal value often in half of this time. Batteries should therefore be either exchanged frequently, which is an expensive procedure, or checked and replaced if out of order.

The most accurate method of assessing available capacity is a controlled discharge with a preset current, usually with so-called 10-hours current or 20-hours current. This method measures the capacity of the battery "manually" switched-off from the load - by discharge rheostats maintaining a constant discharge current or by automatic devices TBA2-IL, TBA150-x-IL, TBA160-IL, which in practice allows to assess the available capacity with accuracy better than ±2 %.

The disadvantage of known solutions is a need for participation of the servicing personnel in the monitoring process lasting from 20 to 40 hours, which requires disconnecting of the battery from the rectifiers and loads, connecting it to the controller, and after ending the testing procedure - re-connecting the battery to the rectifiers and the loads in the power system.

From the Polish patent PL201960 is known the converter system for the telecommunications DC power system with two batteries which eliminates the need for participation of the servicing personnel. In this system, during controlled discharge-charge procedure with the DC programmed current, the converter disconnects through its two relays with switchable contacts selected battery from the power station circuit and connects it to the converter built from transistors, capacitors and inductor. A well-known drawback of this solution is a large current flowing through the relay contacts inside the device in the state of the loads supply from the battery and also the need to switch-off both batteries for disassembly of the appliance for repair or maintenance.

The patent application PL390982 discloses a method and a system for remote diagnostics of the batteries, especially in the ICT systems. According to this solution, in the power system an additional separated bus is connected to the batteries through individual lines, by another contactor to the rectifier units, through another contactor to a group of selected energy loads, and through yet another contactor it is connected during normal bus operation to the system negative bus of the power station. The disadvantage of this solution is a large number of high-current power contactors connecting the loads, complicated procedure of discharging controlled battery with the DC current by adjusting the output current in a separate,

tailored to that function group of rectifiers, and limited ability to use energy stored in controlled battery to maintain supply of the loads in case of power failure in the power grid.

From the patent application US2009021216 A1 is known a solution for charging and remotely managed controlled discharging of two batteries, where individual electronic contactors, made of transistors, are used to connect the loads to the rectifiers and to each of the batteries, and individual for each battery charging systems. The disadvantages of this solution are as follows: the electronic switches are sensitive to shocks and instabilities of the network and are susceptible to cause the energy loss, value of the discharging current is determined by the loads which may change over time, instead of the preferred 10-hours current or 20-hours current, and inability to use the energy of controlled battery to sustain the load in case of the power failure in the power grid, because one cannot directly connect two batteries with different levels of charge/discharge to the energy receivers.

The method for remote measurement of available capacity of the batteries in the telecommunications power system according to the invention is characterized in that in order to initiate remotely an individual discharge for each of at least two batteries, the system negative bus in the power station is connected to the terminals individual for each of the batteries, normally switched-on (and acting as low-voltage switches) of high-current contactors, the second contacts of which are connected, either directly or through the fuses, to the negative poles of the battery, respectively, while these poles are connected through the low-current contactors directly, or through the fuses, to the second input of the controlling-measuring device connected by the third input to the system negative bus and by the first input to the system positive bus, while the third input of the controlling-measuring device is connected to the third input of the additive-subtractive converter, the first input of the controlling-measuring device is connected to the ground input of the additive-subtractive converter, a second input of the controlling-measuring device is connected through the current measurement subsystem to the second input of the additive-subtractive converter, while the microprocessor control unit connected to the monitoring center is connected by the individual lines to the control inputs and high-current contactors and low-current contactors, and to the communication interface of the controlling-measuring device. The microprocessor control unit through one of high-current contactors disconnects the battery designated for testing from the system negative

bus, and through respective low-current contactor connects it to the first input of the controlling-measuring device and then after controlled discharging followed by charging, disconnects tested battery from the controlling-measuring device, and connects it through the high-current contactor to the system negative bus, while the controlling-measuring device on a command from the microprocessor control unit autonomously carries out a test comprising discharge of the battery designated for testing with a current controlled by an internal current measurement subsystem, directing energy taken from the battery to the load of the power system, and then immediately, taking energy from the rectifier units, charges the battery with controlled by the current measurement subsystem the 10-hours current or the 20-hours current up to the preset voltage, and after the preset charging time it terminates the process, passing cumulative result of testing to the microprocessor control unit, while the controlling-measuring device on a command from the microprocessor control unit can only perform an equalizing charging of the battery, and after the preset time it ends the process, passing the cumulative result of charging to the microprocessor control unit, and besides in the process of testing the battery, the controlling-measuring device at a voltage loss in the power grid switches to the battery discharge regime, maintaining the power supply to the load of the power system with energy stored in this battery, while it autonomously controls the internal additive-subtractive converter so that the voltage on the third output of this converter equals to the voltage on the system negative bus, and from the battery disconnected for testing the preset current is taken, while in the process of testing the battery the controlling-measuring device, after finding the voltage is restored in the power grid from the voltage increase at the system negative bus or on the signal from the microprocessor control unit, either continues discharging the battery, or realizes its charging combined with the equalizing charging.

The system for remote measurement of available capacity of the battery in the telecommunications power system according to the invention is characterized in that the system negative bus of the power system is connected to the terminals individual for each of the batteries, normally switched-on (and acting as low-voltage switches) the high-current contactors, the second contacts of which are connected, either directly or through the fuses, to the negative poles of respective battery, wherein these poles are connected by the low-current contactors directly, or preferably through the fuses, to the second input of the controlling-measuring device

connected with the third input to the system negative bus, and with the first input to the system positive bus, in which the third input is connected to the third input of the additive-subtractive converter, the first input is connected to the ground input of the additive-subtractive converter, and the second input is connected through the current measurement subsystem to the second input of the additive-subtractive converter, wherein the microprocessor control unit is connected by individual lines with the control inputs of the high-current contactors and the low-current contactors, and with the communication interface of the controlling-measuring device, and besides the low-current contactors can be advantageously integrated with the controlling-measuring device and switched on by this controlling-measuring device.

The advantage of the invention is the ability to implement, without assistance of the servicing personnel, a measurement of available capacity of the battery being the energy reserve for the telecommunications facilities, while this measurement is carried with the most reliable method of measurement discharge with use of constant 10-hours current or 20-hours current with a minimum energy loss of 5%. Modifications to the electrical system of the power system, in conjunction with the controlling-measuring device, make it possible to initiate remotely the controlled discharge testing procedure of available capacity of each battery used in the power system, mainly of a voltage of 48V, by automatically: disconnecting the battery selected for testing from the power system, its full equalizing charging, followed by the controlled discharge (by downloading a specific or maximum charge), and then charging the battery and re-connecting it to the power system. In case of the power failure in the power grid the energy stored in the battery disconnected for measurement will be transferred to the load in the power system, thus helping other batteries, not disconnected for control.

An embodiment of invented system for remote measurement of available capacity of the batteries in the telecommunications power system is illustrated on the drawing showing a block diagram of the system.

The method of remote measurement of available capacity of the batteries in the telecommunications power system, according to the invention, is implemented as follows: in the modified power system (PS) controlled by the monitoring center (MC) with the microprocessor control unit (MCU), the controlling-measuring device (TBA-ST) is installed permanently so that its communication input (T1) is connected to one of the outputs of the microprocessor control unit (MCU), the first input (M) is

connected to the system positive bus (+), the third input (-S) is connected directly or through the fuse to the system negative bus (-), and the second input (-B) is connected either directly or through the fuses to the contacts of the low-current contactors (p1, pN) of this power system (PS). The controlling-measuring device (TBA-ST) comprises bidirectional additive-subtractive converter (PDO), through which it transfers energy in both directions, during discharging of the battery by reduction or increase of voltage on the second input (-B), and during charging of the battery by reduction or increase of voltage on the third input (-S), while the required current flowing through the second input (-B) from/to the battery is measured using a precise current measurement system (LEM). In response to the command sent from the monitoring center (MC), through the appropriate output of the microprocessor control unit (MCU) the battery (B1, Bn) designated for testing is disconnected using the appropriate (acting also as a low-voltage switch) high-current contactor (P1, Pn) and connected by a suitable low-current contactor (p1, pN) to the second input (-B) of the controlling-measuring device (TBA-ST). After sending by the microprocessor control unit (MCU) of the command to test the battery and after verification of its connection to the second input (-B) of the controlling-measuring device (TBA-ST) the testing procedure is performed in which after equalizing charging of the battery it is discharged with stabilized current of preset value until the battery or its mono-blocks reach preset voltage, or until the preset charge is taken from the battery. Energy from discharged battery is transmitted to the load (LD) through the third input (-S) of the controlling-measuring device (TBA-ST), thus unloading the rectifier units (PR1, PRn). Immediately after the discharge of the battery it is charged with preset current to the specified voltage. Energy to charge the batteries is taken from the rectifier units (PR1, PRn) through the third input (-S). At the end of the procedure the result of the battery test is sent to the microprocessor control unit (MCU) and further to the monitoring center (MC). and then the low-current contactor (p1, pN) disconnects the battery from the controlling-measuring device (TBA-ST) and subsequently the battery is connected with the high-current contactor (P1, Pn) to the rectifier units (PR1, PRn) and the load (LD).

In the system for remote measurement of the available capacity of the battery in the telecommunications power system (PS), according to the invention, the positive poles of at least two batteries (B1, Bn), the positive poles of the load (LD), the outputs of the rectifier units (PR1, PRn), and the first input (M) of the controlling-

measuring device (TBA-ST) are connected to the system positive bus (+), while the system negative bus (-) is connected to the negative poles of the load (LD) and to the negative outputs of the rectifier units (PR1, PRn), to the third input (-S) of the controlling-measuring device (TBA-ST) and to the contacts, individual for each battery, of the high-current contactors (P1, Pn), the second contacts of which are connected through the fuses to the negative poles of respective batteries (B1, Bn), and these poles are connected through the low-current contactors (p1, pN) directly or through the fuses to the second input (-B) of the controlling-measuring device (TBA-ST). The third input (-S) of the controlling-measuring device (TBA-ST) is connected to the third input (3) of the additive-subtractive converter (PDO), the first input (M) of the controlling-measuring device (TBA-ST) is connected to the ground input (1) of the additive-subtractive converter (PDO), the second input (-B) of the controlling-measuring device (TBA-ST) is connected through the current measurement system (LEM) to the second input (2) of the additive-subtractive converter (PDO). The microprocessor control unit (MCU) is connected to the monitoring center (MC) and through individual lines to the control inputs of the high-current contactors (P1, Pn), the low-current contactors (p1, pN) and to the communication connector (T1) of the controlling-measuring device (TBA-ST).

The measurement procedure of discharging and charging of the battery involves constant over time, preset 10-hours current or 20-hours current. If during this measurement procedure a loss of voltage in the power grid would appear, which will be indicated by reduced voltage on the system negative bus (-), the controlling-measuring device (TBA-ST) irrespective of the status of work, will switch into the state "power assist", accordingly increasing or decreasing the voltage at its third input (-S), and the energy from the battery in a manner safe for the contactors and other batteries will support the remaining batteries, supplying the load (LD) until controlled battery is fully discharged or until voltage on the system negative bus (-) increases, which means that the utility power in the power grid is available again.

Claims

1. A method for remote measurement of available capacity of the batteries in the telecommunications power system, **characterized in that** it is controlled by a monitoring center (MC) with a microprocessor control unit (MCU), and comprises a controlled discharge of the battery (B1, Bn) with use of a controlling-measuring device (TBA-ST), with preset constant current, where in order to initiate remotely an individual discharge for each of at least two batteries (B1, Bn), the system negative bus (-) in the power system (PS) is connected to the terminals individual for each of the batteries (B1, Bn), normally switched-on and acting as low-voltage switches, of high-current contactors (P1, Pn), the second contacts of which are connected, either directly or through the fuses, to the negative poles of the battery (B1, Bn), while these poles are connected through the low-current contactors (p1, pN) directly, or through the fuses, to the second input (B) of the controlling-measuring device (TBA-ST) connected by the third input (-S) to the system negative bus (-) and by the first input (M) to the system positive bus (+), while the third input (-S) of the controlling-measuring device (TBA-ST) is connected to the third input (3) of the additive-subtractive converter (PDO), the first input (M) of the controlling-measuring device (TBA-ST) is connected to the ground input (1) of the additive-subtractive converter (PDO), a second input (-B) of the controlling-measuring device (TBA-ST) is connected through the current measurement subsystem (LEM) to the second input (2) of the additive-subtractive converter (PDO), while the microprocessor control unit (MCU) connected to the monitoring center (MC) is connected by the individual lines to the control inputs and high-

current contactors (P1, Pn) and low-current contactors (p1, pN), and to the communication interface (T1) of the controlling-measuring device (TBA-ST).

2. The method according to claim 1 **characterized in that** the microprocessor control unit (MCU) through one of the high-current contactors (P1, Pn) disconnects the battery (B1, Bn) designated for testing from the system negative bus (-), and through respective low-current contactor (p1, pN) connects it to the first input (-B) of the controlling-measuring device (TBA-ST), and after terminating the testing procedure disconnects tested battery from the controlling-measuring device (TBA-ST) and connects it through the high-current contactor (P1, Pn) to the system negative bus (-).

3. The method according to claim 1 **characterized in that** the controlling-measuring device (TBA-ST) on the command from the microprocessor control unit (MCU) autonomously carries out a test comprising discharge of the battery (B1, Bn) designated for testing with a current controlled by an internal current measurement subsystem (LEM), directing energy taken from the battery (B1, Bn) to the load (LD) of the power system (PS), and then immediately, taking energy from the rectifier units (PR1, PRn), charges the battery with controlled by the current measurement subsystem (LEM) the 10-hours current or the 20-hours current up to the preset voltage, and after the preset charging time it terminates the process, passing cumulative result of testing to the microprocessor control unit (MCU).

4. The method according to claim 1 **characterized in that** the controlling-measuring device (TBA-ST) on the command from the microprocessor control unit (MCU) performs only equalizing charging of the battery (B1, Bn), and after the preset time it ends the process, passing the cumulative result of charging to the microprocessor control unit (MCU).

5. The method according to claim 1 **characterized in that** in the process of testing the battery, the controlling-measuring device (TBA-ST) at a voltage loss in the power grid switches to the battery discharge regime, maintaining the power supply to the load (LD) of the power system (PS) with energy stored in this battery (B1, Bn), while it autonomously controls the internal additive-subtractive converter (PDO) so that the voltage on the third output (-S) of this converter equals to the voltage on the system negative bus (-), and from the battery (B1, Bn) disconnected for testing the preset current is taken.

6. The method according to claim 5 **characterized in that** in the process of testing the battery the controlling-measuring device (TBA-ST), after finding the voltage is restored in the power grid from the voltage increase at the system negative bus (-) or on the signal from the microprocessor control unit (MCU), either continues discharging the battery (B1, Bn), or realizes its charging combined with the equalizing charging.

7. A system for remote measurement of available capacity of the battery providing the energy reserve in the telecommunications facilities **characterized in that** it comprises the power system (PS) which is connected to the load (LD) and to the monitoring center (MC) with the microprocessor control unit (MCU), the rectifier units (PR1, PRn) and at least two batteries (B1, Bn) connected through the contactors, and where the positive terminals of the battery (B1, Bn) are connected to the positive system bus (+) of the power system (PS), the positive poles of the load (LD) and the positive outputs of the rectifier units (PR1, PRn), the negative outputs of which are connected to the system negative bus (-), which is connected also to the negative poles of the load (LD), and where the system negative bus (-) of the power system (PS) is connected to the terminals individual for each of the batteries (B1, Bn), normally switched-on and acting as low-voltage switches, the high-current contactors (P1, Pn), the second contacts of which are connected, either directly or through the fuses, to the negative poles of respective battery (B1, Bn), wherein these poles are connected by the low-current contactors (p1, pN) directly, or preferably through the fuses, to the second input (-B) of the controlling-measuring device (TBA-ST) connected with the third input (-S) to the system negative bus (-), and with the first input (M) to the system positive bus (+), in which the third input (-S) is connected to the third input (3) of the additive-subtractive converter (PDO), the first input (M) is connected to the ground input (1) of the additive-subtractive converter (PDO), and the second input (-B) is connected through the current measurement subsystem (LEM) to the second input (2) of the additive-subtractive converter (PDO), wherein the microprocessor control unit (MCU) is connected by individual lines with the control inputs of the high-current contactors (P1, Pn) and the low-current contactors (p1, pN), and with the communication interface (T1) of the controlling-measuring device (TBA-ST).

8. The system according to claim 7 **characterized in that** the low-current contactors (p1, pN) are integrated with the controlling-measuring device (TBA-ST) and are activated by this controlling-measuring device (TBA-ST).

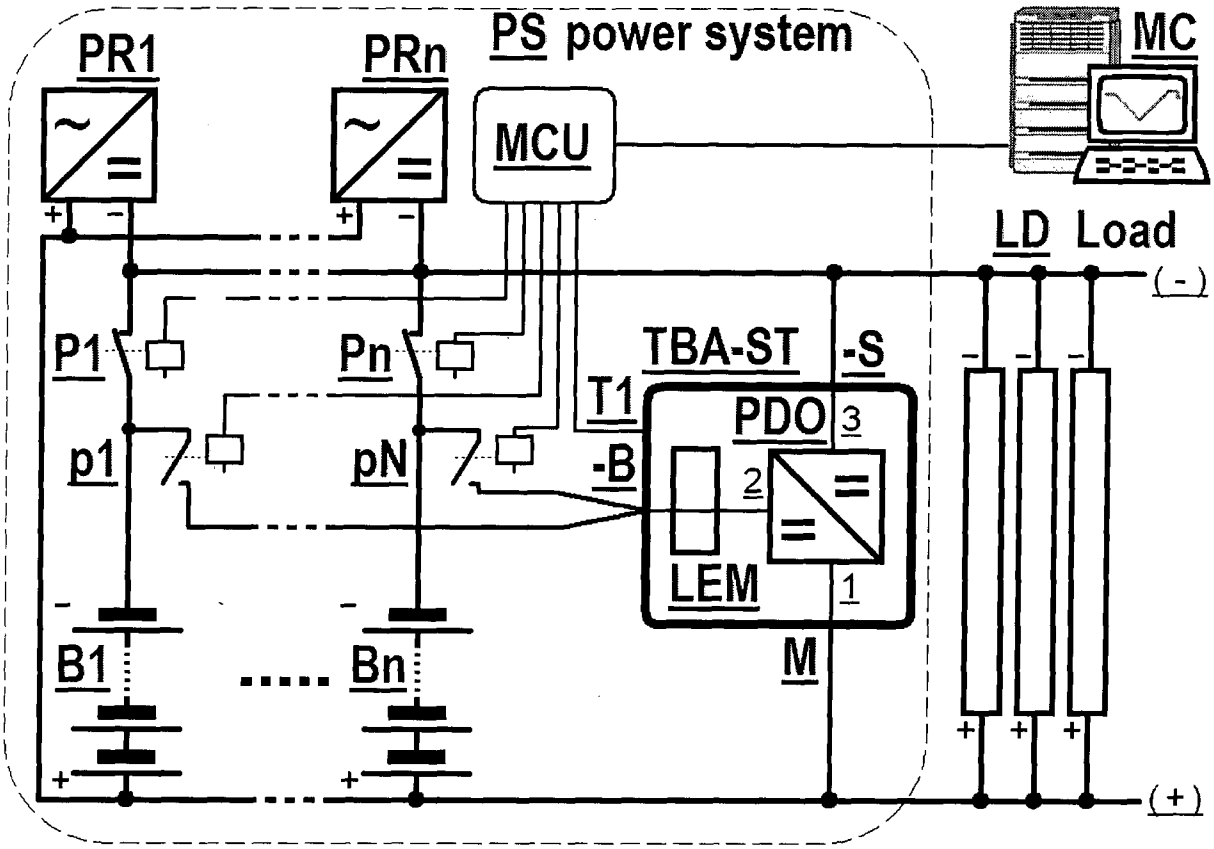
PS power system
PR1
PRn
MCU
MC
LD Load
(-)
(+)
P1
Pn
p1
pN
TBA-ST
-S
T1
PDO
3
2
1
-B
LEM
M
B1
Bn

Fig. 1