M. R. DE FRANCE.

METHOD AND DEVICE FOR USE IN THE MANUFACTURE OF BRAKE SHOES.

APPLICATION FILED JAN. 16, 1919.

1,321,897.

Patented Nov. 18, 1919.

2 SHEETS—SHEET 1.

FIG. 1.

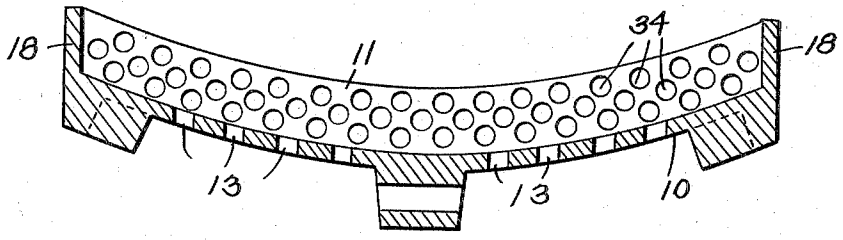

FIG. 2.

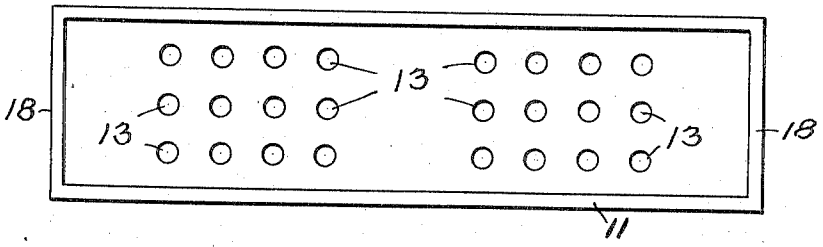

FIG. 3.

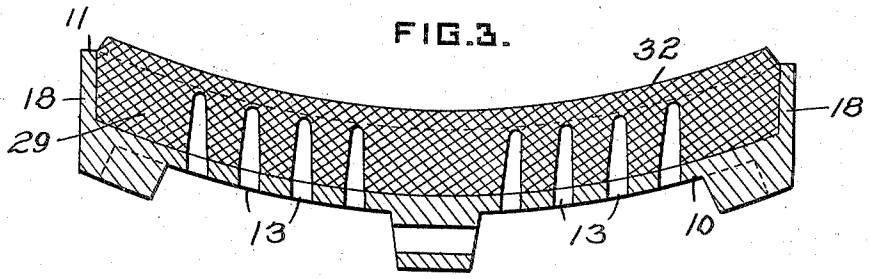

FIG. 4.

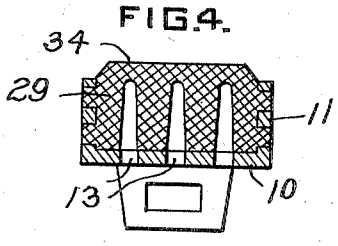

WITNESSES

J. Hebel Bradley.

INVENTOR

Murrell R. De France

By Jno S. Green.

M. R. DE FRANCE.

METHOD AND DEVICE FOR USE IN THE MANUFACTURE OF BRAKE SHOES.

APPLICATION FILED JAN. 16, 1919.

1,321,897.

Patented Nov. 18, 1919.

2 SHEETS—SHEET 2.

FIG.5.

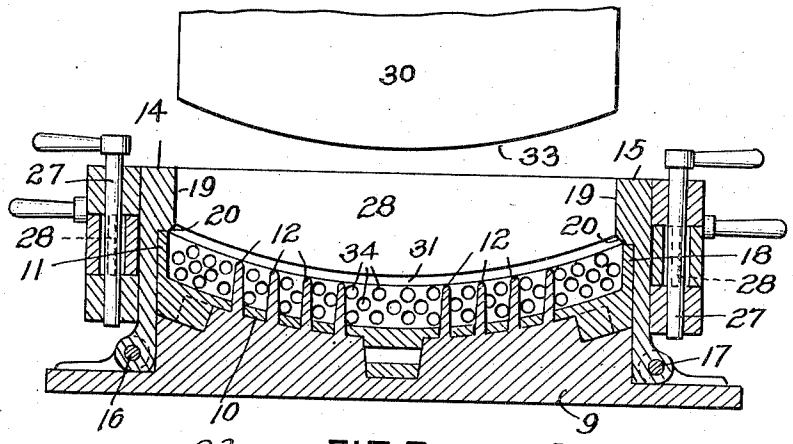

FIG.6.

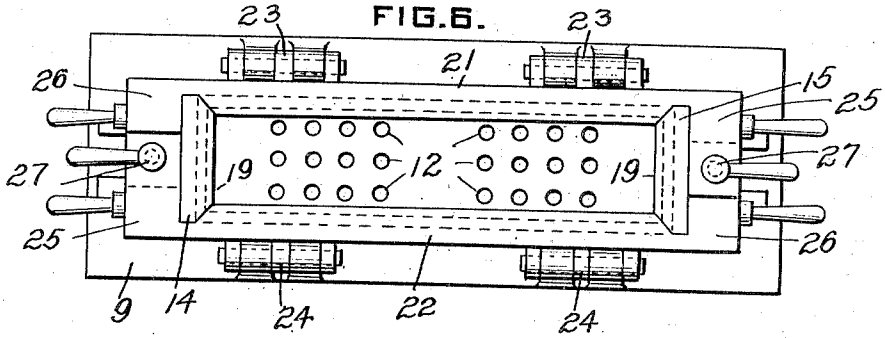

FIG.7.

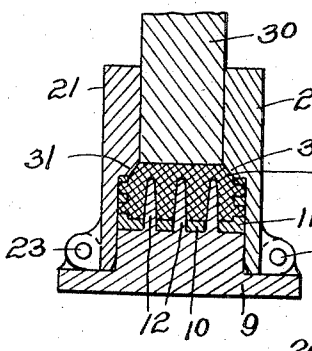

Fig.9.

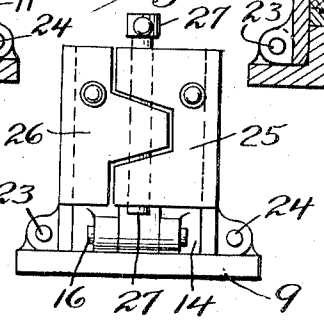

FIG.8.

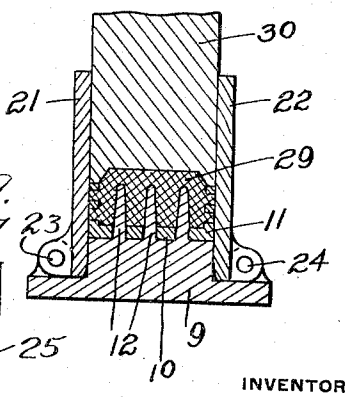

WITNESSES

J. Herbert Bradley.

INVENTOR

Murrell R. De France.

By Jno S. Trues.

UNITED STATES PATENT OFFICE.

MURRELL R. DE FRANCE, OF BELLEVUE, PENNSYLVANIA.

METHOD AND DEVICE FOR USE IN THE MANUFACTURE OF BRAKE-SHOES.

1,321,897. Specification of Letters Patent. Patented Nov. 18, 1919.

Application filed January 16, 1919. Serial No. 271,370.

To all whom it may concern:

Be it known that I, MURRELL R. DE FRANCE, a citizen of the United States, and a resident of Bellevue, in the county of Allegheny and State of Pennsylvania, have made a new and useful Invention in Methods and Devices for Use in the Manufacture of Brake-Shoes, of which the following is a specification.

This invention relates to brake shoes and more particularly to a method and devices for use in the manufacture of brake shoes having an inclosing casing either formed of cast or sheet metal and a filling of frictional material in the casing. In two applications filed by me on January 10, 1918, and June 22, 1918, and bearing Serial Nos. 211,277 and 241,415, respectively, I have disclosed a metal case for composition brake shoes having perforated side walls and a perforated back, the composition filling of frictional material being provided with air channels registering with the perforations of the back and extending into the filling material.

An object of this invention is to provide a device for use in the manufacture of brake shoes of said applications by means of which the casing will be supported so as to prevent outward distortion thereof during the application of pressure on the filling material in compressing it into the casing.

A further object is to provide a device by means of which the air channels in the filling material may be readily formed and the filling material subjected to a determined pressure necessary for compacting the filling material to the desired degree of hardness.

This, as well as other objects which will readily appear to those skilled in this particular art, I attain in the device described in the specification and illustrated in the drawings accompanying and forming a part of this application and throughout the several views of which similar elements are denoted by like characters.

In the drawings Figure 1 is a longitudinal section of a brake shoe casing in the filling of which with frictional material this invention is adapted to be used.

Fig. 2 is a top plan view of said casing.

Fig. 3 is a longitudinal section of the completed brake shoe with the filling material in place.

Fig. 4 is a view in cross section of the shoe shown in Fig. 3.

Fig. 5 is a longitudinal section of a device embodying this invention with an unfilled casing shown in longitudinal section in place therein.

Fig. 6 is a plan view of the device shown in Fig. 5 with the presser foot shown in said figure removed.

Fig. 7 is a cross sectional view of the device shown in Figs. 5 and 6 and this view shows the casing filled with the frictional material as it appears after being compacted by the presser foot, the presser foot being shown in place. Fig. 8 is a view similar to Fig. 7 showing a modification of the device of this invention applicable with the modified form of presser foot shown in this view, and Fig. 9 is an end view of the device.

The device of this invention, broadly speaking, comprises a mold having a base member 9 the top surface of which is shaped to conform to the back 10 of the stamped or cast metal shell or casing 11. This supporting face of the base member is provided with a series of projecting pins or fingers 12 which register with openings 13 formed in the back of the casing or shell and these fingers are preferably tapered as shown in the drawings in order that they may be readily withdrawn from the compacted filling material. Two end members 14 and 15 hinged to the base member 9 at 16 and 17 are arranged when in vertical position to contact with the outer surface of the casing ends 18 and to overhang the end walls of the casing and extend outwardly as shown at 19 a slight distance over the interior of the casing. The lower face of the overhanging portion is chamfered as shown at 20.

Side members 21 and 22 hinged to the base member 9 at 23 and 24 are provided with inter-engaging ends 25 and 26, the inner faces of which lie in contact with the outer faces of hinged end members 14 and 15. The coöperating ends 25 and 26 are formed to receive locking pins 27 each of which is provided with a cam surface 28 for the purpose of rigidly securing the hinged side members together in operative position.

End members 14 and 15, as well as side members 21 and 22 extend a distance above the top of the brake shoe casing to form a rectangular chamber 28 which serves as a receptacle for the filling materiad 29 in plastic form and also as a guide for a presser foot 30.

The sides 21 and 22, as well as the ends

14 and 15, overhang the brake shoe casing and the sides at 31 are chamfered in the same manner as the end members are chamfered at 19.

When the casing is in place within the confining mold or form and the proper amount of plastic filling material has been placed in the casing through chamber 28, the presser foot 30 carried by a suitable press will be lowered into chamber 28 and caused to exert sufficient pressure on the plastic material to distribute the same evenly throughout the brake shoe casing and so as to extend a distance above the same as shown at 32. On account of the chamfered overhanging portions of the form the edges of filler 32 are chamfered as shown in the drawings.

The frictional material with which the case is filled may consist of iron borings and asbestos held together by means of a binder such as resins or resins and drying oils.

In order to obtain the desired degree of density to the filling material and in order not to waste any of the same just the necessary amount will be placed in the chamber 28 to form the finished brake shoe, and, on account of the curvature of face 33 of the presser foot, the wearing face of the brake shoe will be given the proper curvature or contour.

In Fig. 8 I have shown a modified form of presser foot in which the lower face of the same is hollowed out so as to form the necessary chamfered edges to that portion of the filler which projects beyond the brake shoe casing, and, when this form of presser foot is used the inner portions of hinged ends 14 and 15, as well as the inner portions of side walls 21 and 22 will not overhang the brake shoe but will be formed straight as shown in Fig. 8 to provide a guide for the presser foot as well as a receptacle for the plastic filling material.

The pressure exerted by the presser foot of either form will cause the plastic material to flow evenly throughout the brake shoe casing and through side wall perforations 34 to the confining walls of the mold or form. The filling material in this way is caused to completely fill the side wall perforations and to extend flush with the sides of the brake shoe, thus anchoring the filler within the case. When the filler has been pressed until it assumes the proper form the presser foot may be raised, locking pins 27 removed and the form knocked down so that the shoe may be removed therefrom in finished form.

Pins 12 are slightly tapered so as to insure ready removal of the finished shoe from the base 9.

In accordance with the provisions of the patent statutes I have described the principle of the operation of my invention, together with the device which I now consider to represent the best embodiment thereof, but I desire to have it understood that the device shown is only illustrative and that the invention can be carried out in other ways.

Having thus described my invention, what I claim as new and desire to secure by Letters Patent is—

1. A device for use in the manufacture of composition brake shoes having a metal case with perforated sides and back, comprising a base having projecting pins or fingers registering with the back perforations, and hinged side and end members for preventing outward distortion of said case.

2. A device for use in the manufacture of composition brake shoes having a metal case with perforated sides and back, comprising a base conforming to the back of the case and having projecting pins or fingers registering with the back perforations, and hinged side and end members for preventing outward distortion of said case.

3. A device for use in the manufacture of composition brake shoes having a metal case with perforated sides and back, comprising a base serving as a support for the case and having projecting pins or fingers registering with the back perforations, and hinged side and end members for preventing outward distortion of said case.

4. A device for use in the manufacture of composition brake shoes having a metal case with a perforated back, comprising a base for supporting a brake shoe case and provided with fingers or pins which project through the perforations in the back of the case, and means for confining the sides of the case against outward pressure.

5. A device for use in the manufacture of composition brake shoes having a metal case with a perforated back, comprising a base for supporting a brake shoe case and provided with tapered pins or fingers adapted to project through the perforations in the back of the case, and collapsible means for confining the sides of the case against outward pressure.

6. In a device of the character described, a base, end members hinged to the base, side members hinged to the base and adapted when in normal position to interlock and overlap the end members so as to hold said end members in vertical position, and means for securing said side members together.

7. The combination with a brake shoe case having a perforated back, of a support provided with fingers extending through said perforations, a separable form or mold for confining the sides and ends of said case against outward distortion, and means for applying pressure to filling material contained in said case.

8. The method of manufacturing composition brake shoes, which consists in form-

ing a metal case having perforated sides and a perforated back, in resisting outward distortion of said case by confining the same in a mold or form, in filling said case with plastic frictional material, in applying suficient pressure to said material to cause the same to flow through the side openings of the case and to assume the desired degree of hardness and then in removing the finished shoe from said mold or form.

9. The method of manufacturing composition brake shoes, which consists in forming a perforated metal case, in resisting outward distortion of said case, in placing plastic frictional material within the case and then in applying sufficient pressure to said material to cause the same to flow through the perforations of the case and to assume the desired degree of hardness.

In testimony whereof, I have hereunto subscribed my name this 9th day of January, 1919.

MURRELL R. DE FRANCE.