J. L. HARRIS.

HINGE.

APPLICATION FILED AUG. 24, 1916.

1,221,987.

Patented Apr. 10, 1917.

Fig. 1.

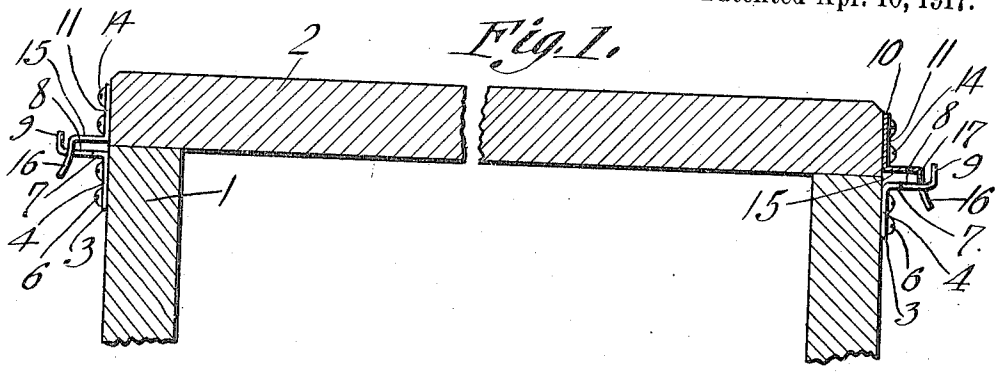

Fig. 2.

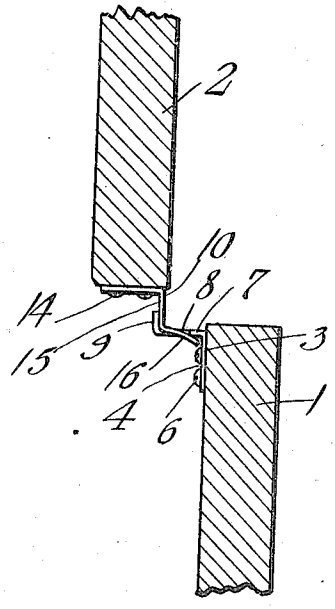

Fig. 4.

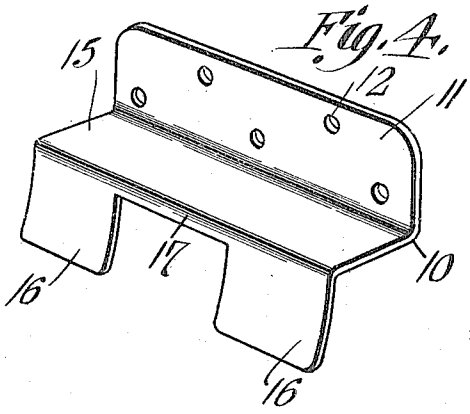

Fig. 3.

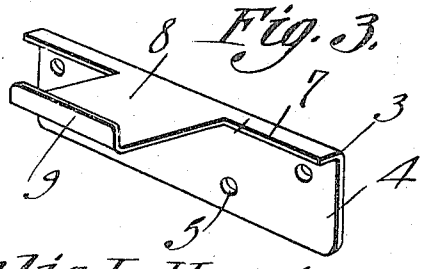

Witnesses

J. R. Tomlin

H. E. Corrigan

Julia L. Harris

Inventor

by C. A. Snow & Co.

Attorneys

THE NORRIS PETERS CO., PHOTO-LITHO., WASHINGTON, D. C.

UNITED STATES PATENT OFFICE.

JULIA L. HARRIS, OF ENGLEWOOD, TENNESSEE.

HINGE.

1,221,987. Specification of Letters Patent. Patented Apr. 10, 1917.

Application filed August 24, 1916. Serial No. 116,682.

To all whom it may concern:

Be it known that I, JULIA L. HARRIS, a citizen of the United States, residing at Englewood, in the county of McMinn and State of Tennessee, have invented a new and useful Hinge, of which the following is a specification.

The device forming the subject matter of this application is a hinge adapted to be employed on a box or chest, and the object of the invention is to improve a known kind of hinge whereby the lid of the box or chest may be lifted off bodily, or, at the will of the user, be swung to an open position, novel means being provided for holding the lid in an open position, and for preventing relative lateral movement between the parts of the hinge.

With the above and other objects in view which will appear as the description proceeds, the invention resides in the combination and arrangement of parts and in the details of construction hereinafter described and claimed, it being understood that changes in the precise embodiment of the invention herein disclosed can be made within the scope of what is claimed, without departing from the spirit of the invention.

In the accompanying drawings:—

Figure 1 is a fragmental cross section showing a chest to which the device forming the subject matter of this application has been applied, the lid being in a closed position;

Fig. 2 is a fragmental cross sectional view in which the lid is shown in an open position;

Fig. 3 is a perspective showing the main member of the hinge; and

Fig. 4 is a perspective showing the auxiliary member of the hinge.

In the accompanying drawings there are shown coöperating elements comprising a receptacle 1 and a lid 2. The invention includes a main hinge member denoted by the numeral 3 and including a depending lip 4 having openings 5 adapted to receive securing elements 6 whereby the main hinge member 3 may be secured to the receptacle 1. The main hinge member 3 includes a rectangularly disposed ledge 7 from which projects a tongue 8 located in the same plane with the ledge, the tongue 8 terminating in an upstanding finger 9. In carrying out the invention there is provided an auxiliary hinge member 10 including a lip 11 having openings 12 adapted to receive securing elements 14 whereby the auxiliary member is attached to the edge of the lid 2. The auxiliary member 10 includes a rectangularly disposed flange 15 having angularly disposed projections 16 separated by a rib 17, the projections 16 lying parallel to the lip 11 and at right angles to the flange 15.

In practical operation, the projections 16 are located on opposite sides of the tongue 8 and, consequently, owing to the construction of the parts of the hinge, the lid 2 may be lifted off of the receptacle 1 when desired. When the lid 2 is swung to an open position, the extremities of the projections 16 engage beneath the ledge 7, and consequently, the opening movement of the lid 2 is limited. Further, lateral movement between the hinge members 10 and 3 is prevented, when the hinge is in an open condition, because, as clearly shown in Fig. 2, the upstanding finger 9 engages behind the flange 15. As shown in Fig. 1, the rib 17 bears on the tongue 8 when the lid 2 is closed, and aids in supporting the flange 15 of the hinge member 10.

The structure shown in Figs. 3 and 4, and hereinbefore described, is duplicated at both ends of the lid 2, and on opposite sides of the lid, the construction being such that the lid may be lifted upwardly, off the receptacle 1, and the construction being such that the lid may be opened in opposite directions.

Having thus described the invention, what is claimed is:—

1. A hinge comprising main and auxiliary members, the main member having an outstanding ledge provided with a tongue located in the same plane as the ledge, the tongue terminating in an angularly disposed finger; an auxiliary member provided with an offstanding flange having angularly disposed projections located on opposite sides of the tongue, the projections coöperating with the ledge to limit the opening movement of the hinge, and the finger coöperating with the flange to limit the lateral separation of the hinge members when the hinge is opened.

2. In a device of the class described, coöperating elements comprising a receptacle and a lid, one of said coöperating elements being provided with a main hinge member having an outstanding ledge equipped with a tongue located in the same plane as the ledge, the tongue terminating in an angularly disposed finger; the other of said co-

operating elements being provided with an auxiliary member equipped with an outstanding flange having angularly disposed projections located on opposite sides of the tongue, the projections coöperating with the ledge to limit the opening movement of the hinge, the finger coöperating with the flange to limit the lateral separation of the hinge members when the hinge is open; the above specified hinge members being duplicated upon opposite sides of the receptacle and the lid, to permit a bodily upward lifting of the lid, and to permit a swinging opening of the lid in opposite directions.

In testimony that I claim the foregoing as my own, I have hereto affixed my signature in the presence of two witnesses.

JULIA L. HARRIS.

Witnesses:
R. COPELAND,
J. H. HARRIS.

Copies of this patent may be obtained for five cents each, by addressing the "Commissioner of Patents, Washington, D. C."