(No Model.)

J. W. GRAYDON.

SHELL.

No. 399,881. Patented Mar. 19, 1889.

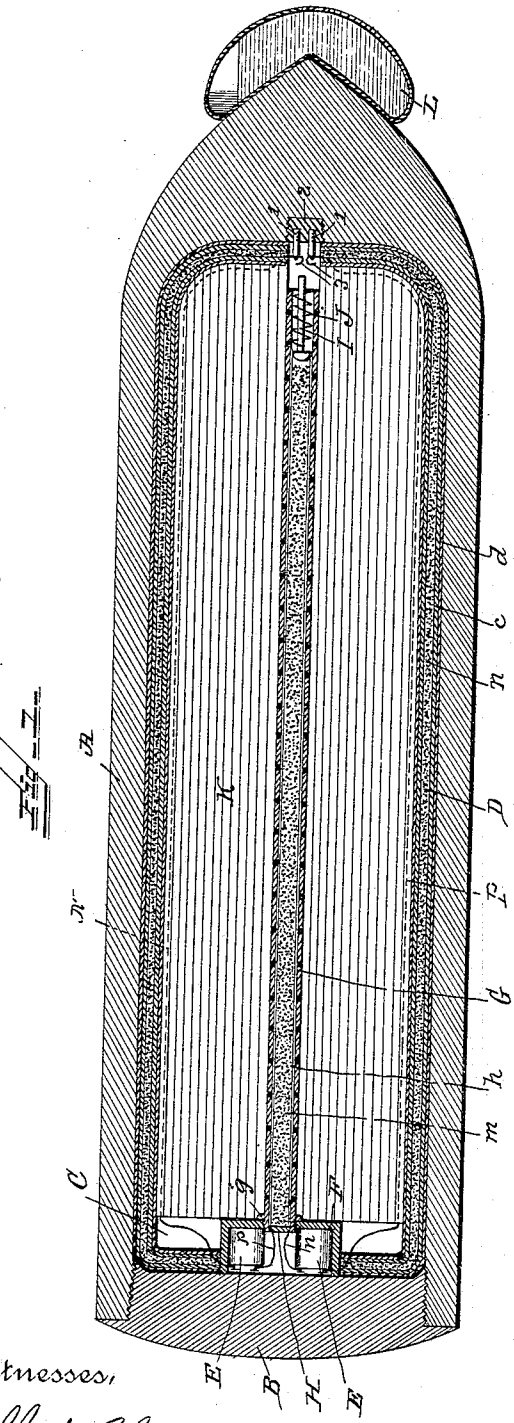

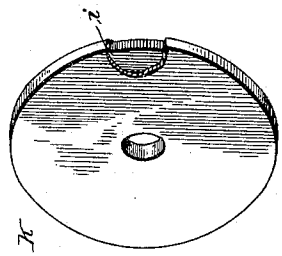

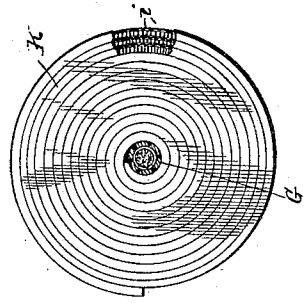

Witnesses,
Albert Speiden.
Robert Owens.

Inventor,
James W. Graydon
By his Attorney,
Wm Hunter Myers

N. PETERS, Photo-Lithographer, Washington, D. C.

UNITED STATES PATENT OFFICE.

JAMES WEIR GRAYDON, OF WASHINGTON, DISTRICT OF COLUMBIA, ASSIGNOR TO ROBERT SOUTHWORTH LAWRENCE, OF LONDON, ENGLAND.

SHELL.

SPECIFICATION forming part of Letters Patent No. 399,881, dated March 19, 1889.

Application filed November 8, 1888. Serial No. 290,288. (No model.)

To all whom it may concern:

Be it known that I, JAMES WEIR GRAYDON, a citizen of the United States of America, residing at Washington, in the District of Columbia, have invented certain new and useful Improvements in Ordnance-Shells, of which the following is a specification, reference being had therein to the accompanying drawings.

The object of my invention is to provide certain improvements in high-explosive shells for use with powder-guns; and it consists in certain novel features, which will first be described in connection with the accompanying drawings, and then clearly pointed out in the claims.

Figure 1 of the drawings is a longitudinal section of a shell embodying my improvements. Fig. 2 is an end view of my improved bursting-charge, consisting of a roll of what I term "dynamite-cloth," partly broken away to show the non-porous covering of the cloth. Fig. 3 is a modification of the form of the bursting-charge shown in Fig. 2, showing the dynamite-cloth cut in the form of a disk, with a central perforation for the passage therethrough of the fuse-tube.

In the accompanying drawings, A represents the casing of the shell, closed at the rear end by a screw-plug, B, and having the usual charge-chamber, C.

Heretofore some high-explosive shells have had a lining of some material which is a non-conductor of heat—such as asbestus—the function of the lining being solely to prevent heat engendered by the explosion of the propelling-charge in the gun from reaching the bursting-charge. I am not aware, however, of the previous use of a lining made of a material which, while capable of resisting the maximum degree of heat thus engendered, will, when subjected to the very much higher degree of heat produced by the explosion of the bursting-charge, be converted into a gas, thus adding to the force of said charge. The lining which I employ serves both these purposes.

D represents the lining for the shell, which consists of finely-pulverized niter, *n*, placed between two layers of cloth or other suitable fabric, *c*, the whole surrounded by paraffined paper, *d*, to exclude moisture of the atmosphere, for which the niter has an affinity, and which, if absorbed by the niter, would render the latter less efficient as a heat-resisting agent. Instead, however, of using paper for this purpose, I may coat each layer of cloth on one side with shellac with an equally-good result.

E are battery-cups, which are held in place by a boxing, F, resting against the inner end of plug B, which boxing in turn is held in place by the bursting-charge and the lining.

G represents the fuse-tube, of any suitable rigid material, extending from near the front end to near the rear end of the charge-chamber and perforated throughout its length. The rear end of this tube passes through a perforation in the boxing F, and is held a short distance from the plug B by a flange, *g*, which rests against the front end of the boxing. The fuse-tube is filled to within a short distance of its forward end with any suitable fuse material, as fulminate of mercury, *m*, inclosed in paraffined paper, *h*, and to its lower end is secured a platinum disk, H, with which are connected wires *n p* from opposite poles of the battery.

N and P are wires connected to the negative and positive poles of the battery and leading to the front end of the charge-chamber, where they are secured to binding-posts 1 1, inserted in a screw-plug, 2, screwed into the shell, the said posts being provided with the usual contact-plates, 3 3.

I do not confine myself to the use of the fuse above described, as other forms of fuse—such as a time or percussion fuse—will readily suggest themselves to a person skilled in the art as effective substitutes.

I represents a metal plunger located in the forward end of the fuse-tube. It is held normally out of contact with the contact-plates 3 3 by means of a coil-spring, J, which encir-

cles it, and is secured at its front end to the tube and at its rear end to the plunger.

K represents the bursting-charge, which is composed of a roll of what I term "dynamite-cloth," of a width to reach nearly the length of the charge-chamber and wrapped around the fuse-tube, as seen in Figs. 1 and 2. Instead, however, of putting up the charge in a roll, it may be cut up into disks, each having a central perforation, as seen in Fig. 3, and these disks then slipped down over the fuse-tube. This dynamite-cloth I make by saturating a thick woolen or cotton fabric with nitro-glycerine and then covering the cloth with thin paraffined paper, *i*, or other equivalent substance, the purpose of which is to prevent the nitro-glycerine from exuding from the fabric.

Neither the electrical fuse nor the dynamite-cloth is claimed herein specifically, but only in combination with each other and with the other elements of my improved shell, as they are the subjects of other applications for Letters Patent of the United States filed by me, the application for patent on the electrical fuse bearing date October 9, 1888, and numbered 287,631, and the application for patent on the dynamite-cloth, (under title of "explosive-charge") bearing date November 8, 1888, and numbered 290,293.

For the purpose of lubricating the bore of the gun as the projectile is being ejected I provide the point of the shell with a flexible porous sack, L, filled with oil, the oil-sack being cemented to the shell, as seen in Fig. 1. The oil will be expressed by air-pressure as the projectile is leaving the gun. As friction is one of the main sources of heat to which the shell is subjected while passing through the gun, and as it is of great importance that a shell filled with a high explosive—like dynamite—should be subjected to as little heat as possible, the utility of this lubrication will be manifest.

My improved lining will resist a considerably higher degree of heat than the shell will be subjected to on the discharge of the gun, for niter resists something over 600° Fahrenheit, and consequently the bursting-charge will be amply protected against premature explosion. When, however, the niter in the lining is subjected to a temperature above 644° Fahrenheit, as it will be by the heat produced by the explosion of the bursting-charge, it will evolve oxygen gas very freely, and this gas, mingling with the gases produced by the high explosive, will render the latter very much more effective. It will thus be seen that this lining is radically different from all other shell-linings having but the single quality of resisting heat.

When the shell is thrown from the gun and strikes, the momentum of the plunger I will carry it, against the stress of spring J, forward between the contact-plates 3 3, and thus close the electric circuit, when the platinum disk H will at once become heated and ignite the fulminate of mercury in the fuse-tube, the explosion of which will detonate the bursting-charge, and that in turn will act upon the lining, with the result above indicated.

Having thus described my invention, what I claim as new, and desire to secure by Letters Patent, is—

1. In a shell having a high-explosive bursting-charge, the combination, with the shell-casing, of a niter lining for the charge-chamber, for the purposes set forth.

2. In a shell having a high-explosive bursting-charge, the combination, with the shell-casing, of a pulverized-niter lining for the charge-chamber, for the purposes set forth.

3. In a shell having a high-explosive bursting-charge, the combination, with the shell-casing, of a lining for the charge-chamber composed of pulverized niter enveloped in a material which will not absorb moisture, for the purposes set forth.

4. In a shell having a high-explosive bursting-charge, the combination, with the shell-casing, of a lining for the charge-chamber composed of pulverized niter enveloped in a suitable fabric covered with paraffined paper, for the purposes set forth.

5. The combination, with a shell-casing, of a flexible porous sack containing oil secured to the point of the shell, for the purpose set forth.

6. In a shell, the combination, with the shell-casing, a fuse, and a device for igniting the fuse, of a high-explosive bursting-charge consisting of a cloth fabric saturated with nitro-glycerine, substantially as described.

7. In a shell, the combination, with a shell-casing, a fuse, and a device for igniting the fuse, of a high-explosive bursting-charge consisting of a cloth fabric saturated with nitro-glycerine and covered by a non-porous substance, substantially as described.

8. In a shell, the combination, with the shell-casing, a fuse extending longitudinally of the charge-chamber, and a device for firing the fuse, of a high-explosive cloth fabric surrounding the fuse, substantially as described.

9. In a shell, the combination, with a shell-casing, a fuse extending longitudinally of the charge-chamber, and an electrical device for firing the fuse, of a high-explosive cloth fabric wrapped around the fuse, substantially as described.

10. A shell comprising a shell-casing having a charge-chamber, a heat-resisting and gas-producing lining for said chamber, a perforated fuse-tube filled with fuse material extending longitudinally of the chamber, an electrical device for firing the fuse material, and a high-explosive cloth fabric surrounding the fuse-tube, all as described, and for the purposes set forth.

11. A shell comprising a shell-casing having

a charge-chamber, a perforated fuse-tube filled with fuse material extending longitudinally of the chamber, an electrical device for firing the fuse material, a high-explosive cloth fabric surrounding the fuse-tube, and a flexible porous sack containing oil secured to the point of the shell, all as described, and for the purposes set forth.

In testimony whereof I affix my signature in presence of two witnesses.

JAMES WEIR GRAYDON.

Witnesses:
G. W. BALLOCH,
C. F. ROBERTS.