Aug. 21, 1934. H. E. SLADE 1,971,019

CONVENIENCE OUTLET

Filed Aug. 15, 1929

Fig. 1.

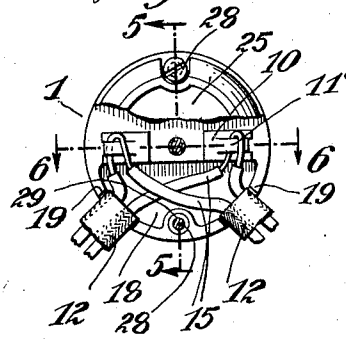

Fig. 2.

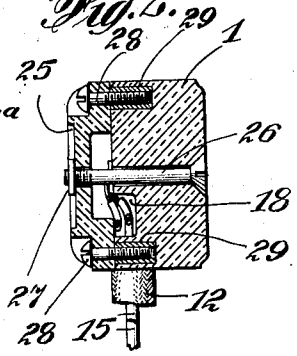

Fig. 3

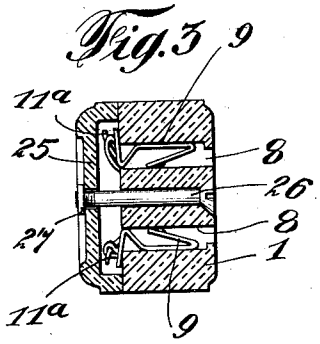

Fig. 4.

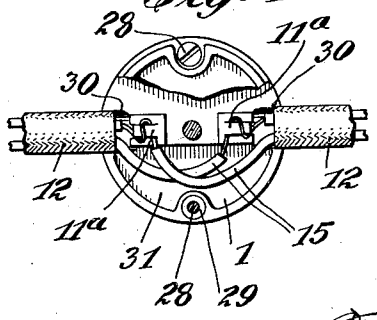

Fig. 5

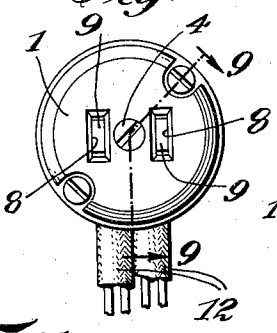

Fig. 6

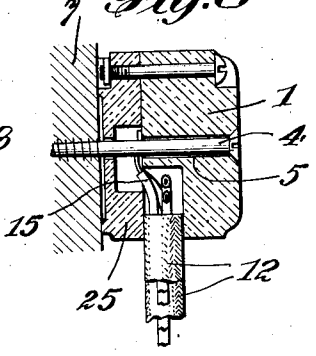

Fig. 7.

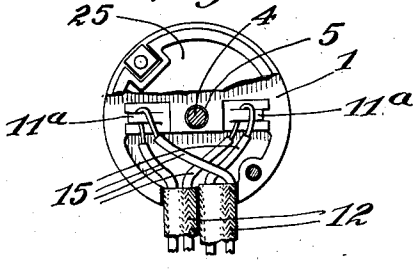

INVENTOR
Harold E. Slade
BY
Frank J. Hunt
ATTORNEY

Patented Aug. 21, 1934

1,971,019

UNITED STATES PATENT OFFICE

1,971,019

CONVENIENCE OUTLET

Harold E. Slade, Glen Ridge, N. J., assignor to Beaver Manufacturing Company, Newark, N. J., a corporation of New Jersey

Application August 15, 1929, Serial No. 386,007

2 Claims. (Cl. 173—338)

My invention relates to electric plug sockets or outlet fittings of the class often called "convenience" outlets.

These appliances are designed to receive the prongs of plugs which are connected to the two wires of a "cord" conductor for the easy insertion of a branch line or circuit into a main line, the cord conductors of which are connected to contact clips or clip terminals of the socket.

In such sockets of one type now in wide use, the socket body has spring contacts placed in plug prong apertures located at opposite sides of the central axis of the body, a cap or cover at the bottom or inner face of the body which holds the contacts in position and is itself secured to the body by a screw or bolt passing through a central opening in the body and cover, or otherwise, and cord-conductor grooves or channels at the base of the body and at opposite sides thereof and so arranged that the individual conductor wires are diverged within the body, passing at opposite sides of the central axis and being connected to terminals or clips on the contacts arranged at opposite sides of the body axis.

A disadvantage of this arrangement is that there is considerable liability to short-circuiting of the conductors if they are accidentally displaced, on account of the stated arrangement with the conductors and especially of parts there- of which have to be stripped of insulation in connecting them to the contacts.

To avoid this difficulty or disadvantage, and to provide an improved socket or outlet fitting of the stated class, I provide a plug body in which a conductor groove or grooves, or channels, are provided passing through the body at only one side of the central axis and so arranged that the individual wires are connected to the terminals located as in previous practice. By this construction or arrangement, the stripped portions of the wires are more effectively separated and the liability to short-circuiting is reduced to a minimum.

The characteristics and advantages of the invention are further sufficiently explained in connection with the following detail description of the accompanying drawing, which shows representative embodiments. After considering these examples, skilled persons will understand that many variations may be made without departing from the principles disclosed, and I contemplate the employment of any structures that are properly within the scope of the appended claims.

Fig. 1 is a rear elevation of a socket embodying the invention in one form.

Fig. 2 is a section at 5—5, Fig. 1.

Fig. 3 is a section at 6—6, Fig. 1.

Fig. 4 is a rear elevation of another modification.

Fig. 5 is a front elevation of another modification.

Fig. 6 is a section at 9—9, Fig. 5.

Fig. 7 is a rear elevation of still another modification.

Figs. 1 to 3 show a socket in which the contact members 10 have spring or clip terminals 11*a*. The body 1 has at one side of its axis a wire recess 18 and communicating with this are two conductor-receiving notches 19 arranged in spaced relation at one side of the body. This arrangement provides for convenient continuous wiring such as referred to above. The insulation of the continuous conductor 12 is stripped away to permit separation of the individual wires, and at appropriate points the insulation is stripped off, and the wires connected to the clip terminals as shown. In this arrangement, it will be noted that the bared portions of the wires are separated longitudinally when the wires are parallel, that is, that they are at different longitudinal positions on the wires, and therefore there is a greatly reduced liability or risks of these bared portions coming together and causing a short-circuit.

In any of the structures shown, the cover-piece may serve to retain the contact members 9 in position, and in the form shown in Figs. 1 to 3 and other forms employing spring or clip terminals, the cover-piece may also serve to retain the wires in proper engagement with the terminals. Thus, in Figs. 1 to 3, the cover is in the form of a cap 25 which may be secured by a central screw 26 which as shown is a machine screw cooperating with a nut 27, or a wood screw may be used as in the previous example when the device is to be secured to a base board or the like. Otherwise, the cover may be held to the body by screws 28 at opposite sides of the axis, these passing through holes in the cap and engaging in threaded holes in the body 1 or in metal thimbles 29 inserted therein.

Fig. 4 shows another modification in which the notches 30 to receive the cord or cabled conductor are formed oppositely, in line with the contact terminals, and the wire recess 31 is formed at only one side of the axis and at one side of the terminals, providing for running the individual wires through the socket at one side of its axis and at the same side of both of the terminals and connection of bared portions of the

wires to the spring or clip terminals in the manner sufficiently explained by the drawing.

Figs. 5 and 6 sufficiently explain a mode of continuous wiring of a modified form of structure. In this instance, the notches or recesses in the body to receive the cabled conductors may be wide enough to receive two adjacently arranged portions of the cable or twisted cord, while the individual wires are separated and connected to the clip terminals as shown in Fig. 7; and in this case, also, it will be noted that if either of the double wires be torn from its connection by external tension on the flexible cable causing the insulated conductor wires to become adjacent one to the other, the bared portion of the wires will remain separated longitudinally and mutual contact or short-circuiting is entirely prevented.

I claim:

1. An electric fitting of the through-cord type comprising a body having plug prong apertures at opposite sides of its axis, contact members in the apertures, said body having only one conductor channel extending at one side only of a cross axial line through the center of said contact apertures, said body having in the outer wall thereof cord openings substantially symmetrically disposed relative to said channel and in communication with said channel.

2. An electric fitting of the through-cord type comprising a body having plug prong apertures at opposite sides of its axis, contact members in the apertures, said body having only one conductor channel extending at one side only of a cross axial line through the center of said contact apertures, said body having in the outer wall thereof cord openings substantially symmetrically disposed relative to a cross axial line extending at right angles to said first mentioned cross axial line, said openings being in communication with said channel.

HAROLD E. SLADE.