G. M. STEHLE.

APPARATUS FOR DEVELOPING PHOTOGRAPHIC FILMS.

APPLICATION FILED APR. 27, 1915.

1,188,217.

Patented June 20, 1916.

2 SHEETS—SHEET 1.

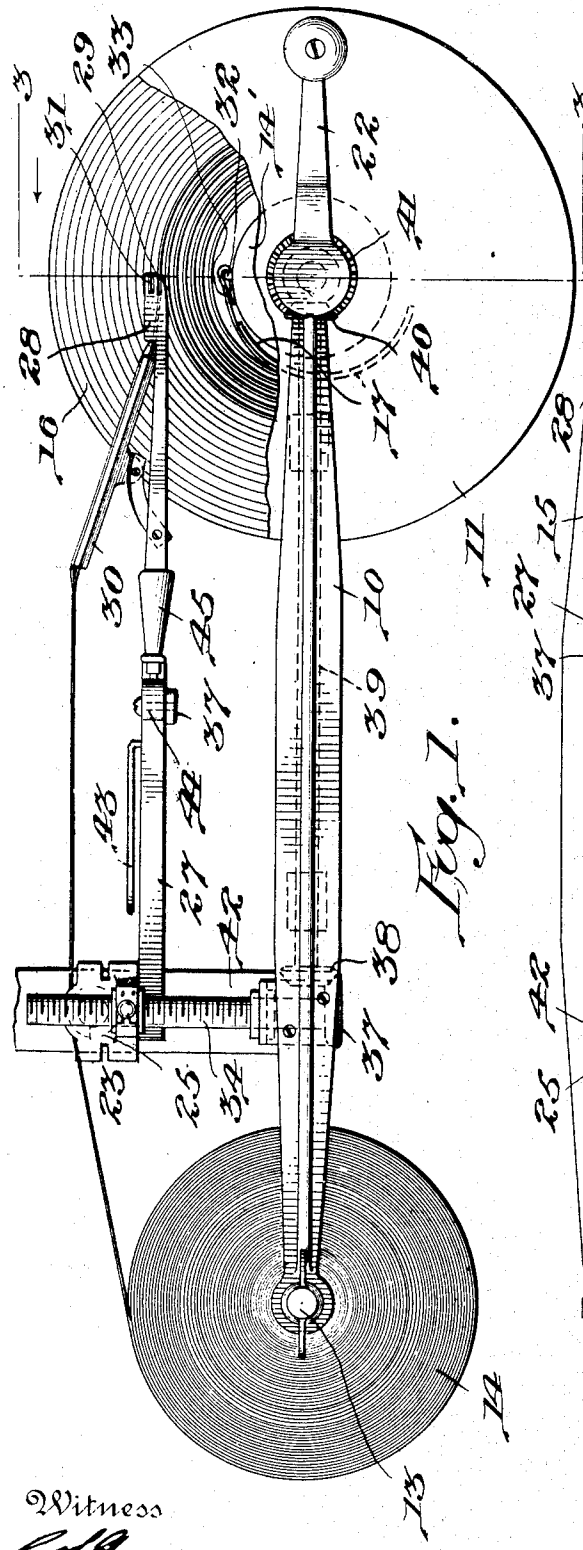

Fig. 1.

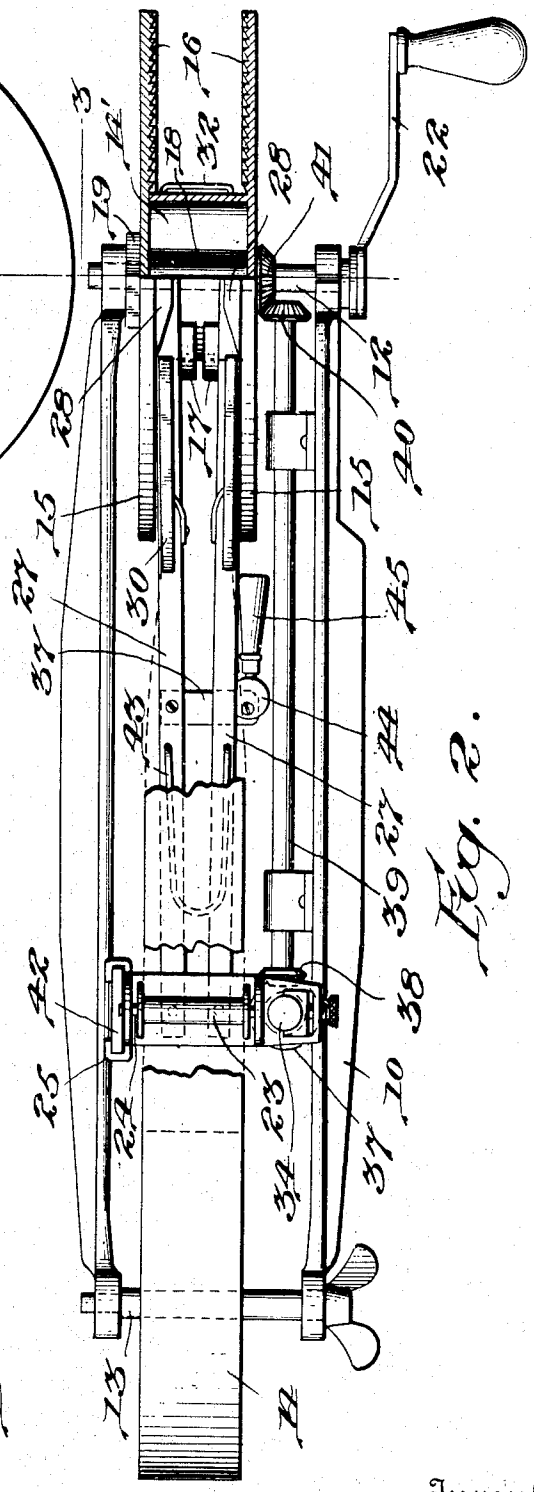

Fig. 2.

Witness

Inventor

George M. Stehle

By

Attorney

G. M. STEHLE.

APPARATUS FOR DEVELOPING PHOTOGRAPHIC FILMS.

APPLICATION FILED APR. 27, 1915.

1,188,217. Patented June 20, 1916.

2 SHEETS—SHEET 2.

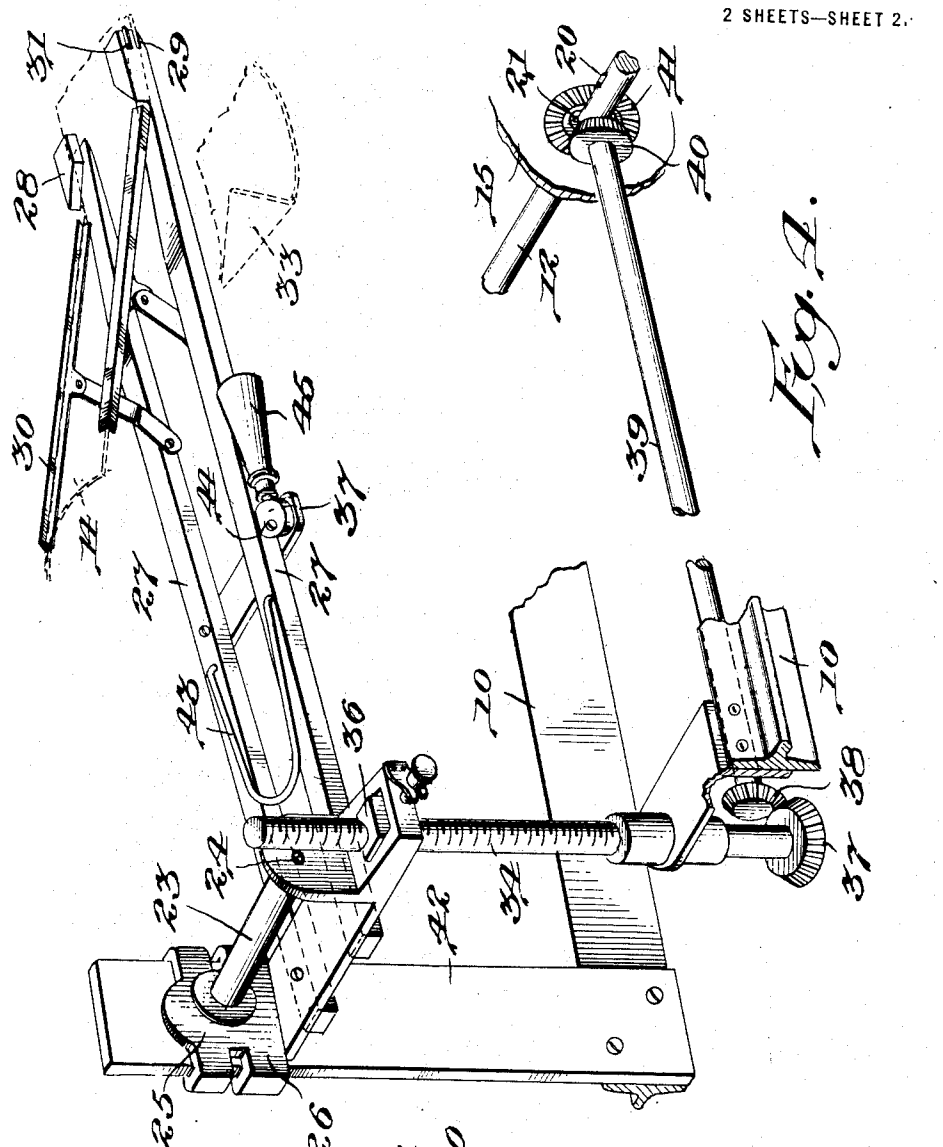

Fig. 4.

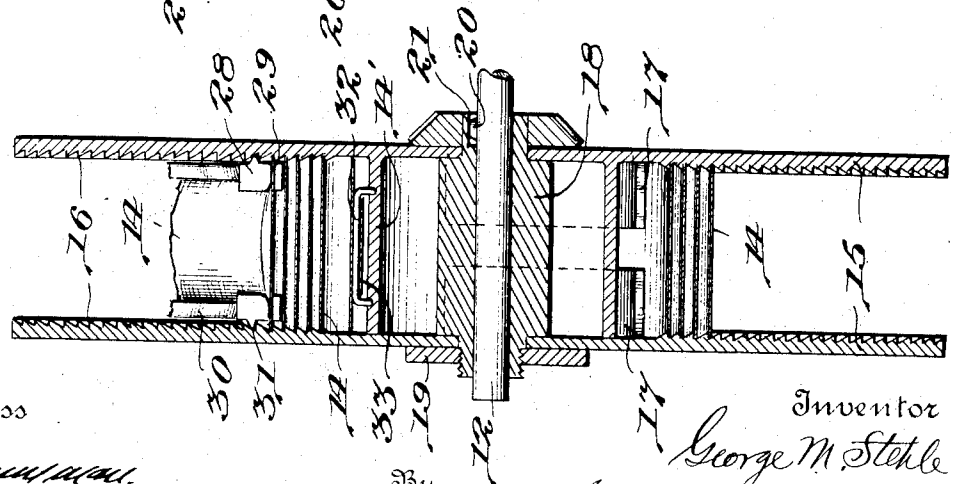

Fig. 3.

Witness

C. S. Gunnemann

Inventor

George M. Stehle

By

Chas. J. McCauson

Attorney

UNITED STATES PATENT OFFICE.

GEORGE M. STEHLE, OF MARIETTA, OHIO.

APPARATUS FOR DEVELOPING PHOTOGRAPHIC FILMS.

1,188,217. Specification of Letters Patent. Patented June 20, 1916.

Application filed April 27, 1915. Serial No. 24,194.

To all whom it may concern:

Be it known that I, GEORGE M. STEHLE, a citizen of the United States, and resident of Marietta, in the county of Washington and in the State of Ohio, have invented a certain new and useful Improvement in Apparatus for Developing Photographic Films, and do hereby declare that the following is a full, clear, and exact description thereof.

My invention relates to apparatus for developing photographic negatives, and more particularly my invention has to do with apparatus for developing photographic film when it is of great length, as in moving picture photography, and generally stated the object of my invention is to support the film for development, as upon a reel, without the necessity of using flexible tape, or a flexible apron interposed between the layers of the film, and I provide such an apparatus which will be simple of construction and capable of easy and rapid operation, and to this end and to others which will be apparent to those skilled in the art when they understand the nature of my invention, such invention consists in the apparatus constructed substantially as hereinafter specified and claimed.

In the accompanying drawings—Figure 1 is a view in side elevation with parts broken away to show what is behind them; Fig. 2 is a view partly in top plan, and partly in horizontal section; Fig. 3 is a detail view in cross section on line 3—3 of Fig. 2; Fig. 4 is a detail view, in perspective, of the feeding arm.

My invention, embodied in what I now regard its best form, comprises a revolving reel, upon which the film to be developed, is wound and supported in a spiral, the adjacent coils of which are spaced apart so that they do not touch, and a feed or guide arm for the film, so supported that its feed, or delivery end travels radially of the reel as the film is wound into said spiral. For the support of these and other parts, a frame 10 is used that generally is composed of two parallel, spaced bars, between which at one end, is mounted the reel 11, by a shaft 12 that rests on opposite sides of the reel in bearing or journal holes in the arm ends, while at the opposite end of said frame is a rod or shaft 13 upon which is supported for freely turning the roll 14 of film to be developed.

The reel 11, has a cylindrical hub 14' which spaces apart the inner sides of the reel, which sides are in the form of two duplicate flat circular plates or disks 15. On the inner face of each disk is a spiral groove 16 that begins at a point just beyond the circumference of the hub 14, and in an arc of constantly and uniformly increasing radius, runs to the periphery of the disk. In cross-section the ridge formed by the groove has the contour of a right angle triangle, with one side in a plane parallel with the reel axis, and forming an abrupt ledge or shoulder upon which is adapted to rest one edge of the film. The spirals in the two disks are made accurately to match each other so that a straight line drawn from the abrupt ledge, or shoulder of one spiral at any point and parallel with the reel axis, will touch a corresponding point in the opposite spiral that is exactly the same distance from the center of the reel, so that when a strip of film is seated at its opposite edges upon the supporting shoulders formed by opposite spirals, the strip will lie in a plane that is parallel with the axis of the reel and due to the spacing of the supporting ledges, or shoulders it will be seen that a substantial air space exists between adjacent convolutions of the film wound upon the reel and supported by the spiral shoulders, and by reason of the support of the latter no apron, tape or other separating device is required. To facilitate the feeding of the advancing end of the film into the spiral I employ a curved guide 17 that leads from the reel hub in a curve of much more rapidly increasing radius than the curve of the spiral, 16 which is of constant pitch, so that a wide entrance space, or mouth is provided between the extremity of said curved guide contiguous to the hub, and the nearest convolution of the shoulder-forming groove 16, and between the periphery of the hub and such nearest convolution there is a wide space, the purpose of which will appear hereinafter. The curved guide 17 may be conveniently made in the form of two plates attached, respectively, to the inner sides of the disks 15, this construction being a convenient one because it is desirable to enable one disk 15 to be removed, or detached for the removal of the developed strip of film. For the ready removal and replacement of one of said disks it is pro-

vided with an axial hole that fits over the shouldered end of a tubular post, or shaft 18, the reduced portion of said post being threaded and receiving a clamping nut 19. Said post is tubular in order that it may receive the reel shaft 12 and the shaft and the reel are rotatably connected together, as by a radial pin 20 on the shaft 12 that engages a radial notch or slot 21 in said post, this being a convenient arrangement in order to enable the ready coupling of the two together for effecting the rotation of the reel by the shaft and yet allowing their separation by the longitudinal withdrawal of the shaft 12, as when it is desired to remove the reel from the machine. Such shaft 12 at one end has a crank 22 by which the revolution of the reel may be produced in the operation of the machine for winding the strip of film upon the reel.

The strip of film from the roll 14 is led, or guided therefrom by certain feed devices into the space between the disks of the reel, and as said feed devices include an arm with guides that lie between the disks, I buckle, or curve the strip of film transversely at least for that portion of its length passing between the disks and before it is actually engaged with the reel, so that notwithstanding the fact that opposite edges of the film strip in order to be supported by the reel must rest upon opposite shoulders of the spirals of opposite disks, the strip may, by reason of the contraction of its width due to its bowing while in the feed device, successfully be fed to the reel supporting shoulders and after emerging from said guide arm and flattening out, will reach across from edge to edge from the supporting shoulders of the spiral of one disk to the opposite supporting shoulder of the spiral of the other disk.

With this brief introductory explanation of the characteristics of the film-feeding mechanism, I will explain the same more in detail as it is illustrated in the drawings.

The strip of film passing from the roll 14 is carried over a guide roller 23 mounted to turn loosely on a stationary shaft, or rod 24 supported by a bracket, or arm 25 suitably supported from the frame 10. To the arm 25 is attached a pair of similar bars 27 that thence extend forward and enter the space between the two reel disks 15. At its forward end each bar 27 has upon its upper side a lug 28 having a horizontal slit 29 that emerges at the forward end and the outer side of the arm through which slit passes the edge of the strip of film, the slit in its rear part inclining inward. In rear of said lug 28, and extending at a gentle incline upward and rearward, each bar 27 has a film guide in the form of a grooved strip 30, the distance between the guides being less than the width of the strip of film when flattened out with the result that the film is bowed, or curved transversely, and, hence, although normally in its flat state transversely the film is wider than the distance between the faces of the reel disks 15, it will, nevertheless, pass freely between such disks, due to its bowed condition, brought about by the action of the guides 30, and yet emerging at the forward ends of the arm 27 through the laterally opening slits therein the film will by flattening out assume its width by which it can rest at its opposite edges upon opposite shoulders of the disk spirals. It is to enable this flattening out of the strip from its bowed condition while passing through the guides 30, that the space between the reel hub and the nearest convolution of the spiral is provided, as I have already explained. The arm lugs 28 on their inner sides at the rear are inclined outwardly and rearwardly so as to provide space, or room for the strip after leaving the guides 30 to continue in the bowed, or bent condition.

Each of the lugs 28 on its outer side has a rib-like projection 31 that engages the spiral groove of the contiguous reel disk 15, and such projection is spaced from the slit 29 a distance in correspondence with the pitch of the spiral, and said projection is above the slit so that, as will be seen, each of the arms 27 by means of said projection being in engagement with the spiral, will, as the reel revolves, move progressively outward in a radial direction and thereby the strip of film will be positively directed, or fed into the spirals of the reel as the revolution of the latter proceeds. It is, of course, understood that the advancing end of the strip of film is connected in some suitable way to the reel. This may be simply done by providing the hub of the reel with a loop 32 on its periphery into which is caught the hooked end 33 of the strip of film. Such hooked end may readily be provided by pointing the end of the film strip and folding back the pointed end for a portion of its length so that such pointed end will lie against the periphery of the hub under the contiguous portion of the strip of film and caught over the loop 32.

It is desirable for smooth and easy action that the rib-like projections 31 of the feeding arm shall at all points of their travel in a radial direction be tangential to the convolutions of the spirals with which they engage, and this condition may be assured by having the feed arm throughout its length move bodily without any substantial change from a position tangent to the curves of the spirals and this involves merely movably supporting the bracket, or arm 25 so that it may move in unison with the rib-like projections 31 when they are moved radially by the action of the spirals. I may

so movably support said bracket, or arm 25 and provide means for imparting the desired upward movement to it during a feeding operation by means of a vertical screw shaft 34 that engages a nut 35 attached to, or mounted upon the bracket, or arm 25 and gearing said screw shaft with the reel shaft 12 so that when the latter is revolved to wind the film upon the reel, feeding motion will be transmitted to the feed screw shaft 35. The feed nut 36 is preferably a half, or split nut that may be disengaged in a well known manner from the screw when it is desired to lower the feed arm after a reeling operation so as to save the time that would be involved in feeding it down by the revolution of the screw shaft. A convenient way of gearing the screw shaft to the reel shaft is shown in the drawings, it consisting of a bevel pinion 37 on the lower end of the screw shaft which meshes with a like pinion 38 on a horizontal shaft 39, which contiguous to the reel shaft has a beveled pinion 40 which meshes with a like pinion 41 on the reel shaft. The bracket, or arm 25 on the side opposite the location of the feed screw shaft may slidably engage an upright 42 for guiding it in its vertical movements.

In order to facilitate the placing of the guide arms 30 in position between the reel sides and their removal therefrom, said bars by reason of having a pivotal connection at the rear ends with the arm 30 may be swung toward and from each other and they are normally swung apart by means of a hair-pin spring 43 and they may be moved inward against the pressure of the spring by means of the eccentric, or cam 44 having an operating handle 45 which is pivoted upon an arm 37 that is attached to one of the bars and lies beneath the two bars so that as said cam engages the outer side of the bar to which said arm is not attached the revolution of the cam by its handle in one direction will cause the two arms to approach each other and thereby reduce the space between them sufficiently to allow the forward film guiding ends of the bars to pass freely between the reel sides while when moved in the opposite direction, the arms by the action of the spring 34 will spread apart until the outer sides of the film guides 30 are quite close to, or in actual contact with the disk sides.

From the description which I have now given of the construction and operation of the mechanism shown in the drawings to illustrate one embodiment of my invention, it will be seen that my invention is susceptible of embodiment in an apparatus for mechanism whose construction is simple which can be rapidly operated and which will place the film in condition for development rapidly and with the best results especially since the adjacent convolutions of the film when wound upon the reel are not in contact with each other, nor with any other object, but are exposed for complete access of the developing fluid. It will be evident that with the spiral winding of the film a great length of film may be accommodated in a small space and that the length of the film to be accommodated is dependent upon the diameter of the reel, which, of course, can be any diameter desired. While it is immaterial whether the film is bowed, or buckled up or down while passing through the feed arm between the reel sides, it is preferred to bow the film with the emulsion side curved convexly, especially as this results in supporting the strip of film at its edges upon the uncoated surface of the celluloid.

It is, of course, to be understood my invention may be embodied in mechanisms of different construction and, therefore, it is to be understood that I do not restrict myself to the embodiment of my invention in any particular form of mechanism beyond the requirements of the terms in which I have set forth my invention in the claims and in the light of the disclosure of the specification.

Having thus described my invention what I claim is—

1. As an improvement in film handling apparatus, a film-receiving reel having opposing film supports extending spirally of the reel, said supports being in the form of opposing ledges upon the inner opposing sides of the reel each of said spiral ledges being continuous, and a film guide situated between the outer edges of opposing ledges and movable in a direction radially of the reel.

2. As an improvement in film handling apparatus, a film-receiving reel having opposing film supports extending spirally of the reel, the entrance point of the film being near the center of the reel and formed by a guiding surface that approaches the first convolution of the spiral in a direction that inclines outward whereby the distance between such surface and the first convolution rapidly diminishes.

3. As an improvement in film handling apparatus, a film-receiving reel having opposing film supports extending spirally of the reel, and a film guide tracking in the spiral path of the reel said guide having at its side a projection into said spiral path.

4. As an improvement in film handling apparatus, a film-receiving reel having opposing supports extending spirally of the reel, and a film guide situated between opposing spirals of the reel engaging the opposite edges of the film the distance between the film edge engaging parts of said guide being less than the distance between the op-

posite spiral film supports where the latter engage the film, whereby the latter may assume a bowed shape in cross section while in said guide.

5. As an improvement in film handling apparatus, a film-receiving reel having opposing supports extending spirally of the reel, and a film guide situated between opposing spirals of the reel engaging the opposite edges of the film whereby the latter may resume a bowed shape in cross section while in said guide, and means whereby said film emerging from the guiding means may assume its flattened form transversely.

6. As an improvement in film handling apparatus, a film-receiving reel having opposing film supports extending spirally of the reel, and a film guide comprising a movable arm having spiral-engaging means that engage the reel spirals and track therein.

7. As an improvement in film handling apparatus, a film-receiving reel having opposing film supports extending spirally of the reel, and a film guide comprising a movable arm formed of a pair of guide-carrying bars that are movable toward and from each other.

8. As an improvement in film handling apparatus, a film-receiving reel having opposing film supports extending spirally of the reel, and a film guide comprising a movable arm formed of a pair of guide-carrying bars that are movable toward and from each other, each of said arms having on its outer side a spiral-engaging projection.

9. As an improvement in film handling apparatus, a film-receiving reel having opposing film supports extending spirally of the reel, and a film guide comprising a movable arm formed of a pair of guide-carrying bars that are movable toward and from each other, each of said arms having at its forward end a slit that extends from its inner side forward and outward and emerging at the forward end and side of the arm.

10. As an improvement in film handling apparatus, a film-receiver having opposite film-edge-engaging surfaces upon projections that extend toward each other, and means for feeding the film to said surfaces having film-edge-engaging devices placed nearer together than the width of the film whereby the film is bowed transversely to enable it to pass between the opposite projections a predetermined distance, the film after leaving said feeding means flattening out to overlie the surfaces on the projections.

11. As an improvement in film handling apparatus a reel comprising spaced film receiving members between which the film is adapted to be wound, and a film guide comprising a movable arm formed of a pair of guide-carrying bars that extend at their inner ends into the space between said members, said bars extending outside the space between said members and pivoted to swing toward and from each other.

12. As an improvement in film handling apparatus a reel comprising spaced film receiving members between which the film is adapted to be wound, and a film guide comprising a movable arm formed of a pair of guide-carrying bars that extend at their inner ends into the space between said members, said bars extending outside the space between said members and pivoted to swing toward and from each other, and a spring acting normally to move said bars apart.

13. As an improvement in film handling apparatus a reel, comprising spaced film receiving members between which the film is adapted to be wound, and a film guide comprising a movable arm formed of a pair of guide-carrying bars that extend at their inner ends into the space between said members, said bars extending outside the space between said members and pivoted to swing toward and from each other and each of said bars having at its inner end a flange engaging guiding lug.

In testimony that I claim the foregoing I have hereunto set my hand.

GEORGE M. STEHLE.