R. Newell,

Lock.

No. 3,135. Patented June 14, 1843.

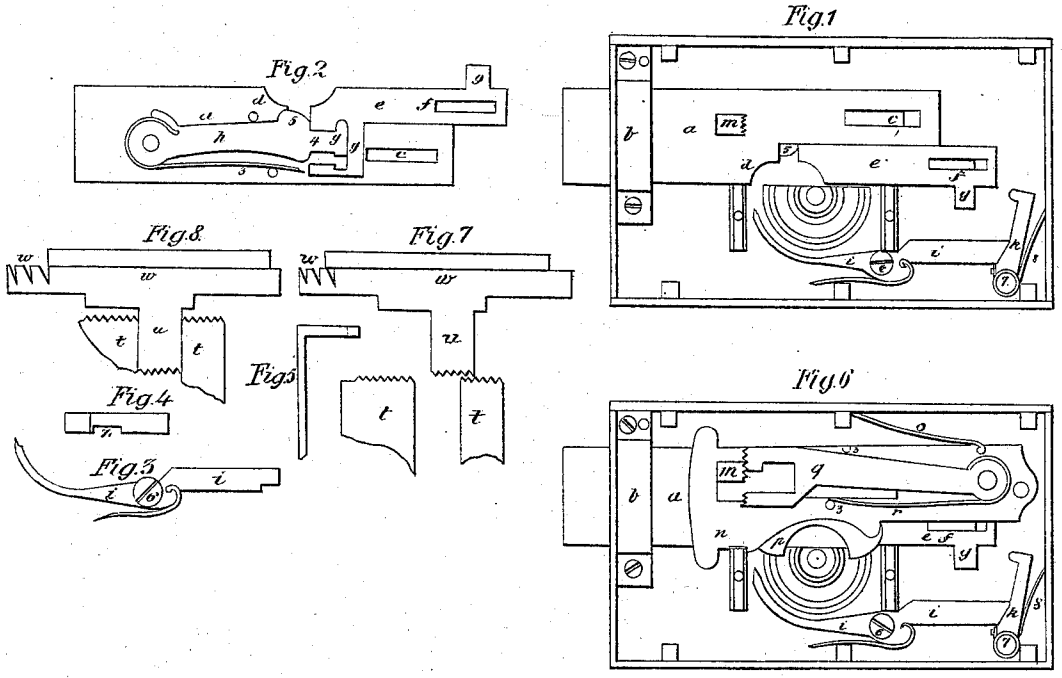

Witnesses
W. Sewell
Henry Palmer

Inventor
Robert Newell

AM. PHOTO-LITHO. CO. N.Y. (OSBORNE'S PROCESS.)

UNITED STATES PATENT OFFICE.

ROBERT NEWELL, OF NEW YORK, N. Y.

CONSTRUCTION OF LOCKS.

Specification of Letters Patent No. 3,135, dated June 14, 1843.

To all whom it may concern:

Be it known that I, ROBERT NEWELL, of the city, county, and State of New York, lock manufacturer, have invented and made and applied to use certain new and useful improvements in the construction of locks, applicable to any description of locks, either fitted with a bolt and tumblers or with slides in addition to tumblers, for which improvements I seek Letters Patent of the United States; and that the said improvements and the method of constructing and using the same and the ends attained thereby are fully and substantially set forth and shown in the following descriptive specification and in the drawings annexed to and making part hereof, the figures in which are hereinafter consecutively referred to.

These improvements divide themselves, mechanically, into two portions, the first of which applies to the bolts of locks, and is shown in the drawing in Figure 1, wherein a lock is shown with the bolt in place, and in the detached Fig. 2, the opposite side of the bolt is shown in reversed position, the parts of which, and the improvements made and attained by me, are as follows in either figure.

a is the bolt as fitted in place with a staple, *b*, guide, slot and stud, *c*, in the usual manner. The talon *d*, by which the key throws the bolt forward, is also made in the usual manner, but the talon, *e*, by which the bolt is thrown back, is made as a slide, having at the back end a slot and stud *f*, to guide and sustain it in place. Between the bolt *a*, and the case plate of the lock, the sliding talon *e*, is fitted with a plate *g*, see Fig. 2, having an opening, the lower corner of which is made with a circular indent, or notch; the upper corner is made with a square indent, or notch; next this, on the same side of the bolt, a talon tumbler *h*, is secured on the bolt *a*, by a pin 1 and check stud 2 and fitted with a spring and stud 3, the tongue or moving end 4 is made with a circular dent, or tooth, to match the corresponding indent in the plate *g*, of the talon *e*, and also a square dent, or tooth, to match the corresponding square indent in the plate *g*, of the talon *e*, the belly 5, of the tumbler *h* being fitted to take the bit of the key belonging to the lock. Below the bolt *a*, see Fig. 1, a screw 6, holds a lever *i* made with a crook upward, beneath the wards of the lock, the other end being straight, with a shoulder forming a tenon on the outer end, as shown in Fig. 3, a screw stud 7, holds a follower *k*, shown in section, in the detached Fig. 4, as made with a notch *z*, which receives the square or tenon end of the lever *i*, with the shoulder of the tenon against the shoulder of the notch *z*, and a spring 8 is fitted with a tendency to throw the dent, or tooth, on the point of the follower *k*, against a tongue 9, on the lower side of the sliding talon *e*. The operation of these parts is, that if the proper key is used, the bit strikes the belly 5 of the talon tumbler *h* before striking the fixed talon *d* of the bolt *a*, this raises the tumbler *h* and places the square dent on the tongue 4 into the corresponding indent of the plate *g*, and holds it there while the key carries the bolt out by the fixed talon *d* and with it the sliding talon *e*. On the key leaving its hold, the spring 3 returns the circular dent on the tongue 4 into the corresponding indent of the plate *g*. On returning or unlocking the bolt *a* by the right key the bit strikes the belly 5, as before, locking the square dent and indent together, before the key bit strikes the movable talon *e* which then carries back with it, or unlocks, the bolt *a*. But if a pick or false key be introduced, so as to touch the talon *e* without lifting the talon tumblers *h*, by the belly 5, the slightest pressure on the talon *e* will cause the circular dent on the tongue 4 to disengage itself from the corresponding indent in the plate *g*, and the talon *e*, will slide back without disturbing the bolt *a*, and while these parts are thus detached, no false key, or pick, nor even the right key can move the bolt *a*. To reconnect the parts, a hooked pick, shown in the detached Fig. 5, is to be introduced through the key hole, and made to depress the crooked arm of the lever *i*, which will disengage the tenon shoulders, see Fig. 3, from the shoulder of the notch *z*, in the follower *k*, see Fig. 4, and the spring 8, Fig. 1, will force the dent on the upper end of the follower *k*, against the tongue 9 on the movable talon *e* and slide that in the same direction, bringing the talon tumbler *h*, into place with the plate *g*, when the right key can be used to open the lock, and on the return of the bolt *a* and talon *e* the tongue 9 sets back the follower *k*, and the spring beneath the lever *i* sets the tenon shoulder

onto the shoulder of the notch *z*, in the follower *k* and holds that in the proper position as shown in Fig. 1. It will be seen, that this mode of fitting a lock furnishes the means of detecting any attempt to pick, or improperly open the lock, and is also a protection against the consequence of any such attempt.

The second part of these improvements applies to the tumblers of locks, when fitted alone, as shown in Fig. 6, and also to tumblers and slides jointly, as shown in Figs. 7 and 8. In Fig. 6, a lock is shown, with a portion of the same parts and references, as in Figs. 1, 2, 3 and 4 the stump *m*, (not before noticed) being in both Figs. 1 and 6, shown as on the shank of the bolt *a* in the usual place; *n*, is a tumbler, *o*, a check spring, and *p* a bridge plate, all made and fitted in the usual way. In the face of the tumbler *n*, or let flush into the body, by a proper opening in the metal of the tumbler is a check tumbler *q*, made with a mouth on the end, to pass the stump *m* on unlocking the bolt *a* by the right key, the retaining spring *r*, and two steady studs *s*, *s*, keep the check tumbler *q*, in place on the tumbler *n*, and the ends of the check tumbler *q*, and the face of the stump *m*, are fitted with saw teeth dents, matching into each other. The bolt *a* is made with just so much end shake, that when thrown by the key, the dents on the stump *m*, are just clear of the dents on the jaws of the check tumbler *q*, but if a pick is put in, so as by any means to apply a retained force, or pressure, tending to throw back the bolt *a*, the dents in the stump and tumbler come together, and in this situation, the tumblers *n*, however numerous, may be all lifted, and held up, by picks, or other tools, but without breaking the stump *m*, or the check tumbler *q*, or both, no force that can be applied will move the bolt *a*, to open the lock.

In Figs. 7 and 8 *t*, *t*, are the jaws, forming the mouths in the ends of tumblers; *u*, *u*, are the slides, with their tongues *v*, and latches *w*, all shown as usually made and fitted, in permutation, or changeable locks, but the main bolt being made with a small amount of end shake, on any attempt to apply a retaining force, or pressure, to withdraw the bolt, the slides *u*, move with the bolt, and the dents on the tongues *v*, match into the corresponding dents in the jaws of the tumblers *t*, *t*, so that no force, short of breaking the parts, will either lift the tumblers, or move the bolt, but on entering the right key, the corner of the bit touching on the locking talon, moves the bolt, by the end shake, in the opposite direction, which disengages the dents, and leaves the key free to act in the proper manner.

The important difference, in the operation of the parts herein described, compared with locks as heretofore made, consists in the fact, that in the modes hitherto used, the ends of the jaws on the tumblers, and the ends of the tongues on the slides of permutation, or changeable locks, as also the common tumblers and stumps in more common locks, are all made smooth on the parts, which pass each other, in contact, so that when a burglar has placed a strain on the opening talon of the main bolt, he can successively lift the tumblers, by forcing them to slide against the ends of the tongues on the slides, or against the side of the stump, as the case may be, until the mouth of the tumbler intersects the proper tongue, or the stump, which he will know by the tumblers stopping, and on so raising the last tumbler, he can throw the bolt back. But in the mode described, of fitting these parts with indentations, which interlock together when a strain is put on to throw the main bolt, the burglar cannot lift the tumbler of a permutation lock at all, and though he may lift the tumbler *n*, shown in Fig. 6, he cannot move the bolt, while the check tumbler *q*, is in contact with the stump *m*, nor can he lift the check tumbler to disengage it, and if he attempts to raise and try the tumblers, singly, before putting a full strain on the bolt, the collisions of the parts render it impossible to fix that portion of the tumbler, which will intersect and pass the tongue, or stump, and as the form of the teeth, in each successive tumbler and tongue, may be varied from the preceding, by making them saw teeth, or square dents and indents, or teeth with round points and bottoms to match, the difficulty will be increased, by the difference of sound, and feeling to the hand, in the contact of each tumbler and tongue, and in making common tumbler locks, the parts, that come in contact with the stump on the bolt shank, can be fitted with teeth to match similar teeth on the stump, with a proper degree of end shake in the main bolt, so as to attain the same object, without a check or second tumbler on or in the common tumbler.

Some of the foregoing parts have been applied to various uses, both in locks, and other mechanical movements.

Therefore I only claim the same as follows:

1. The mode of forming and applying the movable talon *e* and its plate *g* with the opening and indents therein behind the shank of the bolt *a* (or between that and the lock plate), and the combination therewith, of the talon tumbler *h*, with its tongue 4, belly 5 and dents or teeth to fit the indents in the plate *g* when such application and combination are used on the bolts of locks, as a means of protection against, or detection of, any improper attempt to open the lock, and I claim the further combination

with these parts, of the lever *i*, follower *k*, and tongue *q*, for the purpose of replacing the talon *e*, by first depressing the lever *i*, with a hooked pick, such as shown in Fig. 5, the whole of such parts being constructed and operating substantially as herein described and represented.

2. I claim the application of check tumblers *q*, fitted on, or in, common tumblers *n*, and the mode of fitting the jaws of such auxiliary or check tumblers with dents, or teeth, matching into corresponding dents, or teeth, in the stump *m*, as also the fitting those parts of common tumblers, which lie in contact with the stump, with teeth to match others in the stump, in either case, in combination with so much end shake in fitting the bolt *a*, as shall bring these teeth in conjunction, on any improper force being applied to throw back the bolt *a*, before the tumblers *n*, are lifted, the whole of such parts being constructed and operating substantially as herein described and represented.

3. I claim the mode of fitting the ends, or jaws, of the tumblers of permutation or changeable locks, and the ends on the tongues of the corresponding slides, each with dents, or teeth, to match the other, in combination with so much end shake in the main bolt, as shall bring such teeth into conjunction, on the application of any improper force, to withdraw the main bolt, before lifting the tumblers, such mode of fitting and combination being substantially as herein described and represented.

In witness whereof, I have hereunto set my hand and seal in the city of New York this thirty-first day of March in the year one thousand eight hundred and forty-three.

ROBERT NEWELL. [L. S.]

Witnesses:

WM. SERRELL,

HENRY PALMER.