United States Patent

Perri

[15] **3,638,380**

[45] **Feb. 1, 1972**

[54] MODULAR HIGH-RISE STRUCTURE

[72] Inventor: **Joseph G. Perri**, New York, N.Y.

[73] Assignee: **Walter Kidde Constructors Incorporated**, New York, N.Y.

[22] Filed: **Oct. 10, 1969**

[21] Appl. No.: **865,284**

[52] **U.S. Cl.** **52/236**, 52/79, 52/648

[51] **Int. Cl.** **E04h 1/04**

[58] **Field of Search** 52/236, 79

[56] **References Cited**

UNITED STATES PATENTS

639,320	12/1899	Vierendeel	14/12 X
2,294,556	9/1942	Henderson	52/236 X
2,499,498	3/1950	Hammond, Jr.	52/236 X
2,675,895	4/1954	Loewenstein	52/236
2,851,875	9/1958	Astorga	52/236 X
3,331,170	7/1967	Lowe et al.	52/79 X
3,507,080	4/1970	Van Hezik	52/79

FOREIGN PATENTS OR APPLICATIONS

494,733	5/1954	Italy	52/236

Primary Examiner—Frank L. Abbott
Assistant Examiner—Sam D. Burke
Attorney—Mandeville and Schweitzer

[57] **ABSTRACT**

The invention is directed to new and improved structural concepts for so-called high-rise buildings, providing for optimum utilization of prefabricated apartment modules and providing for highly economic construction techniques and economic utilization of space. The structure is of generally peristylar form, in that all of the principal vertical support columns are located about the exterior of the structure. A unique arrangement is provided for supporting prefabricated apartment modules, comprising special horizontal support beams, extending transversely in the structure and which are supported at their ends by longitudinal beams engaging the vertical support columns. The transverse beams are so designed that their webs and flanges lie in two intersecting planes, and T-beams are ideally suited for this purpose. The prefabricated apartment modules are supported by their edges on the transverse beams, in such manner that the webs and flanges of the beams are received between very narrow vertical and horizontal clearance spaces between apartment modules. To great advantage, the longitudinal support beams of the peristylar structure are comprised of Vierendeel trusses located at alternate story levels of the structure and spanning a vertical distance of one story. The arrangement of Vierendeel trusses is structurally advantageous and has pleasing architectural characteristics.

6 Claims, 7 Drawing Figures

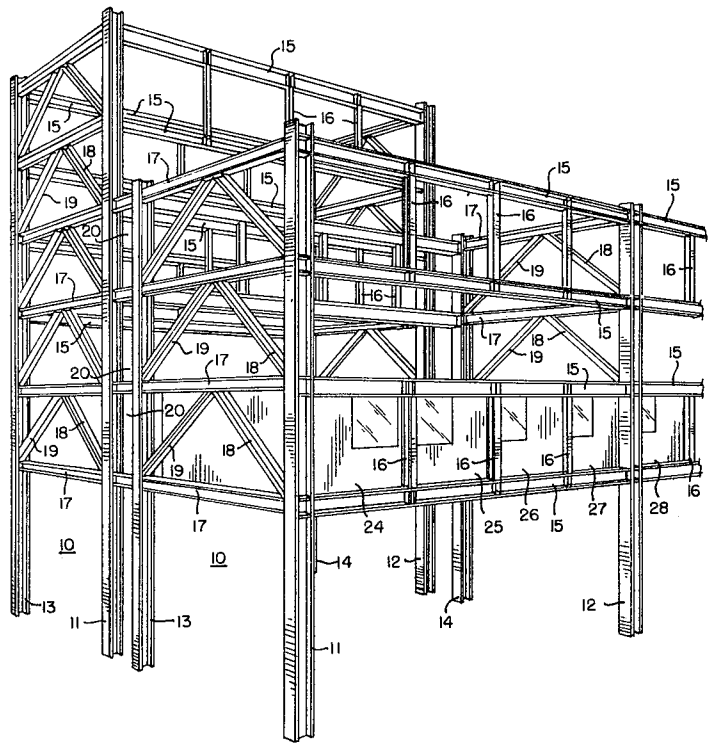

FIG. 1

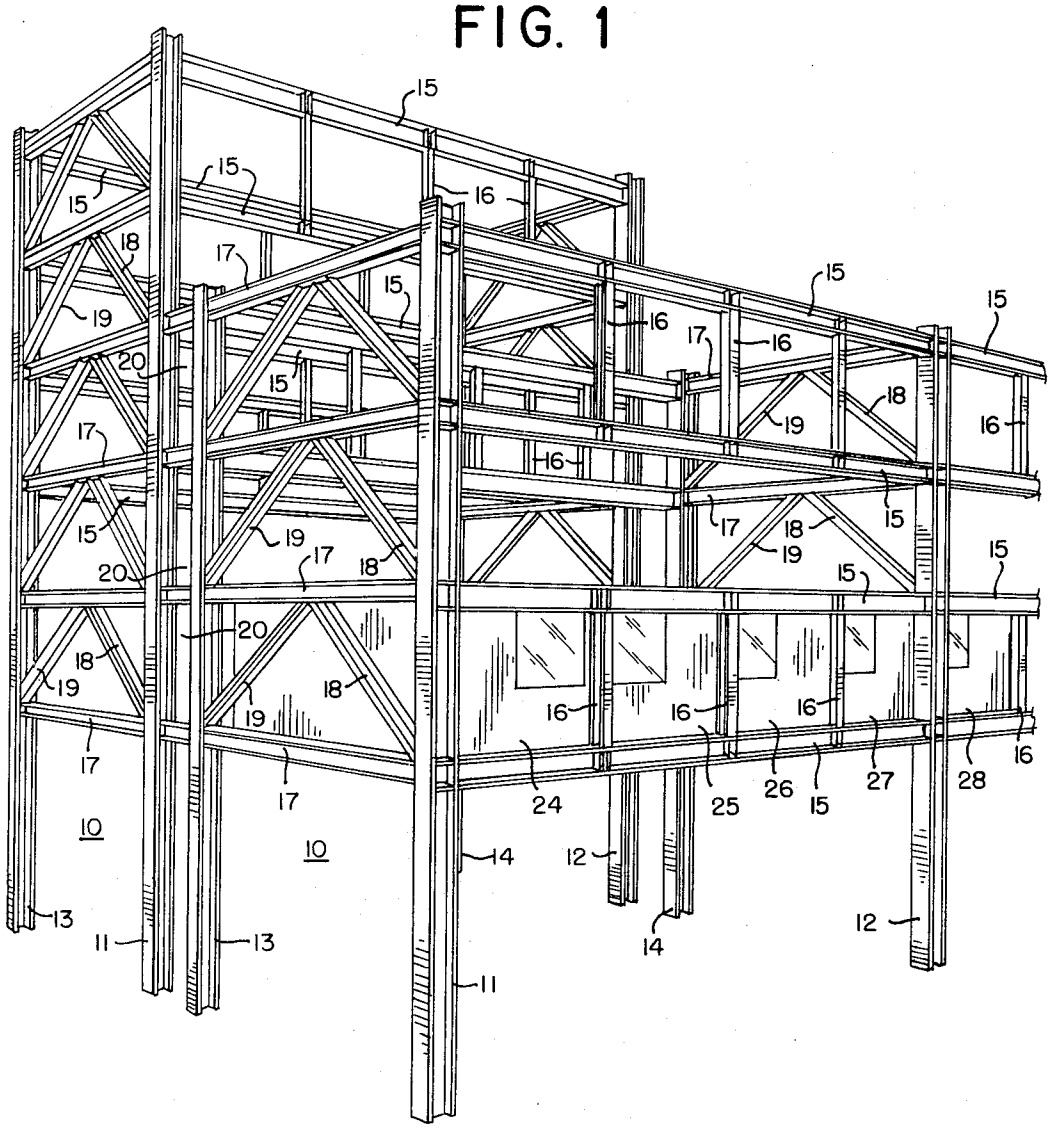

INVENTOR.
JOSEPH G. PERRI

BY Mandeville & Schweitzer

ATTORNEYS

FIG. 2

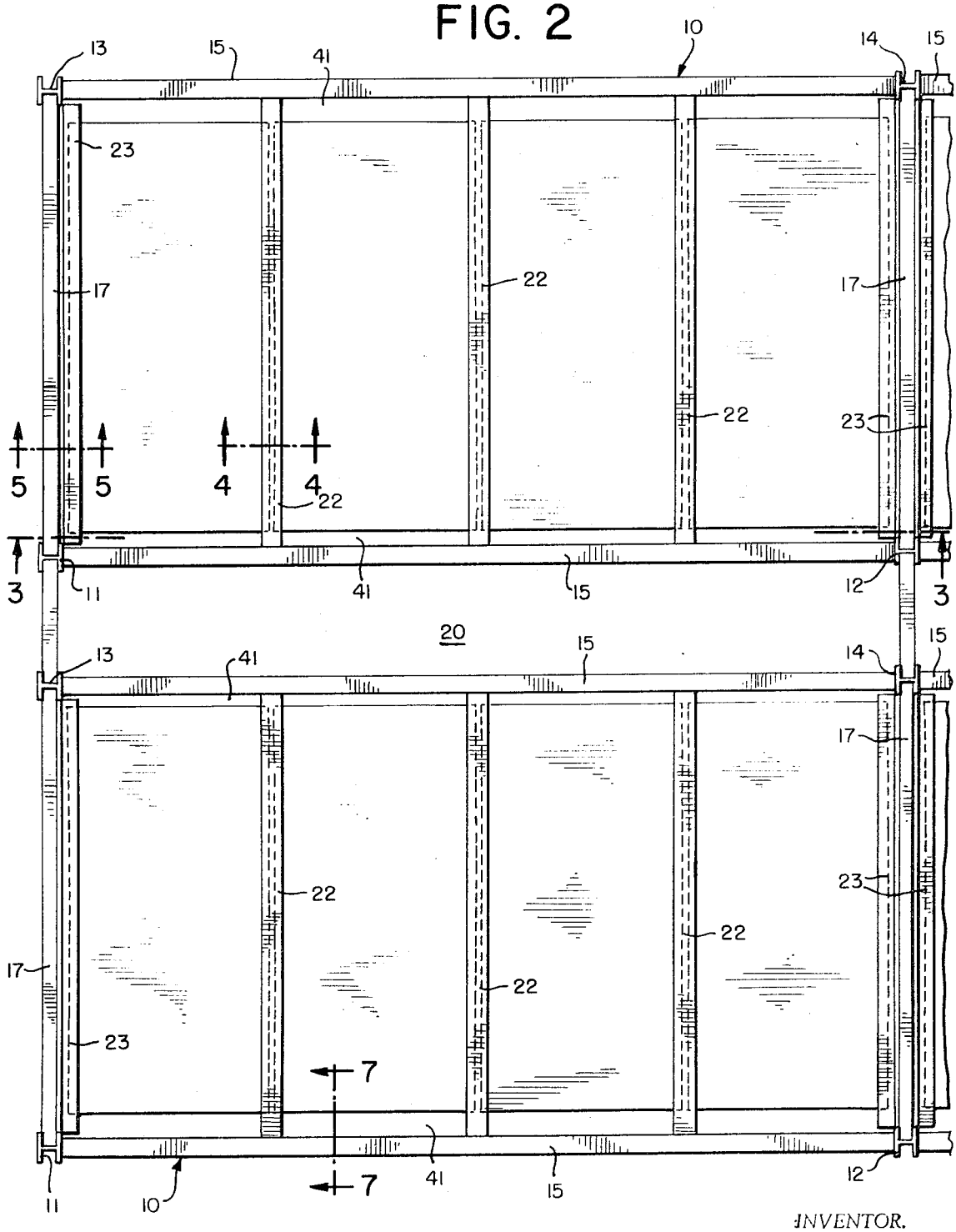

INVENTOR.
JOSEPH G. PERRI

BY Mandeville & Schweitzer

ATTORNEYS

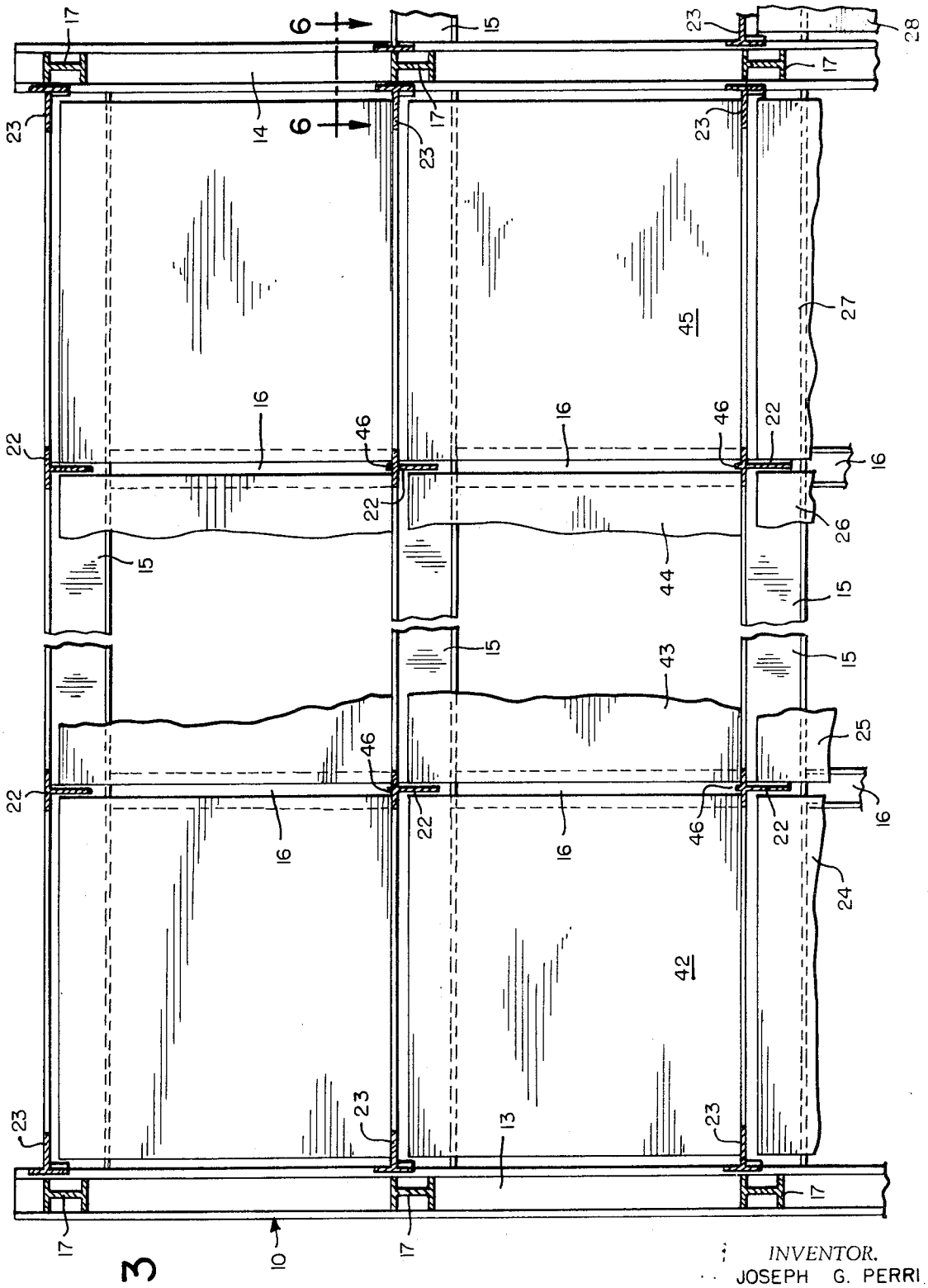

FIG. 3

INVENTOR.
JOSEPH G. PERRI

BY Mandeville & Schweitzer

ATTORNEYS

FIG. 4

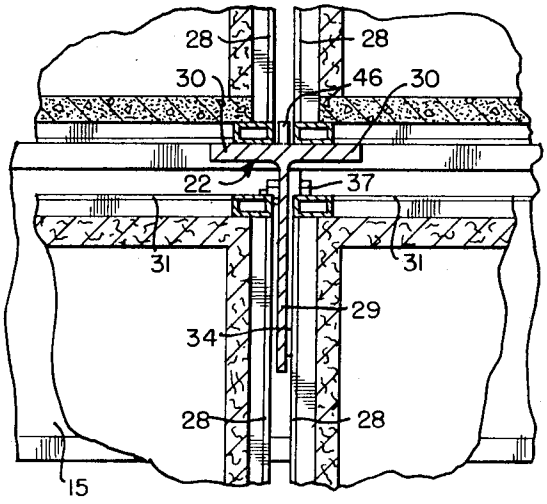

FIG. 5

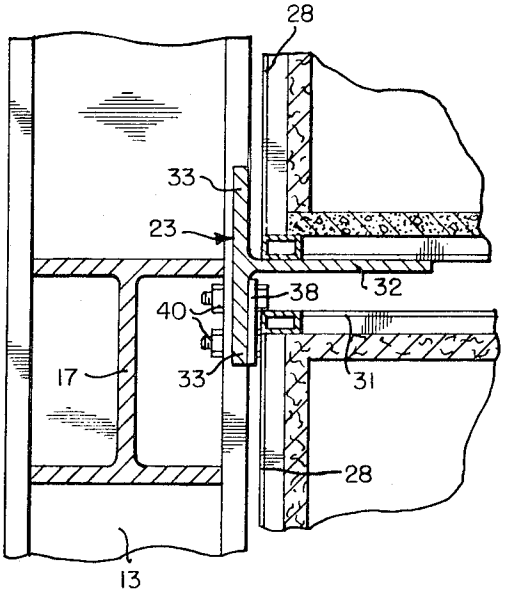

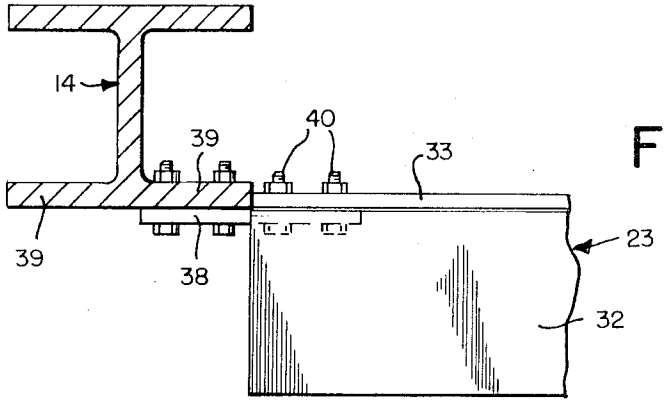

FIG. 6

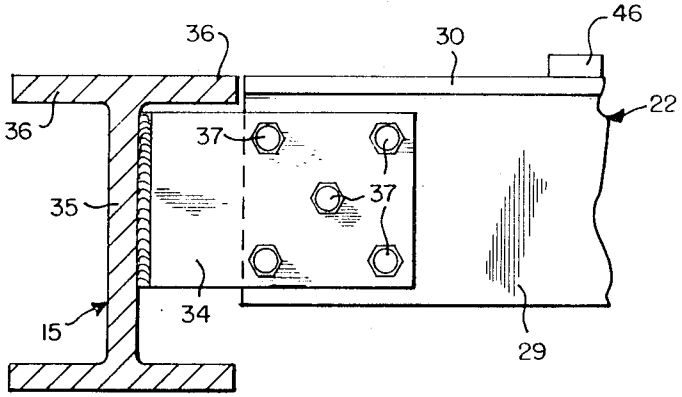

FIG. 7

INVENTOR.
JOSEPH G. PERRI

BY Mandeville & Schweitzer

ATTORNEYS

MODULAR HIGH-RISE STRUCTURE

SUMMARY AND BACKGROUND OF INVENTION

The invention is directed to multiple-story, or so-called high-rise buildings, and is intended particularly for, although perhaps not necessarily limited to, high-rise apartment buildings intended for human occupancy. One of the underlying objectives of the invention is to enable more effective and efficient use to be made of prefabricated, self-contained apartment modules in the construction of high-rise apartment structures. To this end, it is an objective of the invention to provide a structural framework for a high-rise apartment which is most ideally suited for the installation of prefabricated apartment modules, which greatly facilitates their installation in the structure, and which provides for optimum efficiencies of materials and space in the completed building.

In accordance with one specific aspect of the invention, a new and advantageous structural framework is provided, for the reception of prefabricated apartment modules, which is peristylar in its general configuration. That is, the principal vertical supporting columns are arranged and disposed about the exterior of the structure. Each of the story levels of apartment modules is independently supported by the framework of vertical columns, so that the apartment modules themselves do not have any load-bearing function.

In the structure of the invention, the prefabricated apartment modules desirably are boxlike units; they are self-supporting structures, in that they do not rely upon the basic structural framework of the building to retain their prefabricated configuration, they can be handled independently by cranes, etc. In accordance with one aspect of the invention, the structural framework of the building is effectively floorless. Support for the apartment modules at each story level is provided by special support beams extending transversely in the structure and engaging the apartment modules along their lower side edges. The transverse beams are of greater length than the transversely disposed apartment modules, and extend beyond them at both ends. The transverse beams themselves are supported at their projecting end extremities by other horizontally disposed beams extending longitudinally in the structural framework between adjacent vertical columns. Thus, in the structure of the invention, the apartment modules are supported entirely by the special transverse beams, which engage only the lower side edges of the modules.

As one of the advantageous features of the invention, the special transverse beams are of a configuration in which the webs and flanges lie in two intersecting planes, and most desirably, the configuration is in the shape of a Tee. Thus, in the completed structure, both the web and flange portions (crossbar and stem) of the T-shaped beam may be received between closely spaced walls of vertically and horizontally adjacent modules. A particular advantage of this structure resides in the ability to install the apartment modules in a "compact configuration," in which there is a virtual minimum of clearance space between adjacent modules in both the vertical and horizontal directions.

A further significant feature of the invention resides in the utilization, in the structural framework of the building, of Vierendeel trusses which extend longitudinally between vertical columns, along the front and back of the framework. The Vierendeel trusses are comprised of longitudinal beams which extend horizontally, substantially at the levels of the horizontal planes between adjacent story levels of apartment modules. A plurality of vertical truss elements extend between and are rigidly secured to pairs of these horizontal beams to form the Vierendeel trusses. As a feature of the invention, the vertical truss members extend between alternate pairs of the horizontal beams, so that the Vierendeel trusses are located at alternate story levels at the front and back sides of the high-rise structural unit. The use of the Vierendeel truss provides adequate strength for the independent support of each level of apartment modules and provides for adequate lateral stability of the structure. From an architectural standpoint, the Vierendeel truss has significant advantages in providing for a substantially unobstructed view from the apartment modules suspended in a structural framework of generally peristylar configuration.

A further objective of the invention resides in the provision of a structural framework, suitable for the independent support of a large number of prefabricated apartment modules, wherein the structural framework is the installation self-supporting to its full height without the use of interior structural elements. By this means, the entire structural "shell" may be constructed, leaving a hollow framework with an open top. Prefabricated apartment modules may then be lowered individually into the interior of the framework and the overall structure completed in successive story levels. The necessary transverse support beams may also be inserted in successive story levels, as layers of the apartment modules are installed. The structure of the invention also contemplates, of course, that the installation of apartment modules may be made more or less concurrently with the installation of successive story levels of the framework.

For a more complete understanding of the above and other features and advantages of the invention, reference should be made to the following detailed description and to the accompanying drawings.

DESCRIPTION OF DRAWINGS

FIG. **1** is a simple perspective view of a typical high-rise apartment structure incorporating the principles of the invention;

FIG. **2** is a top plan view of the structure of FIG. **1**;

FIG. **3** is a vertical cross-sectional view taken generally along line **3—3** of FIG. **2**;

FIGS. **4** and **5** are enlarged, fragmentary cross-sectional views taken generally along lines **4—4** and **5—5**, respectively, of FIG. **2**;

FIG. **6** is an enlarged, fragmentary cross-sectional view taken generally along line **6—6** of FIG. **3**;

FIG. **7** is an enlarged, fragmentary cross-sectional view taken generally along line **7—7** of FIG. **2**.

DESCRIPTION OF PREFERRED EMBODIMENT

Referring now to the drawing, and initially to FIG. **1** thereof, there is shown a typical high-rise apartment complex incorporating the principles of the invention. The complex includes a plurality of structural units **10** which form the fundamental basic structure of the invention and can be repetitively incorporated in a larger structural complex in accordance with the specific requirements of the installation. The structural unit **10** comprises four vertical supporting columns **11–14** (see FIG. **2**) arranged in peristylar configuration, that is, about the exterior of the structure. Desirably, the four columns are arranged to form the four corners of a rectangle. For purposes of aiding the description, and without implying any limitation, the pairs of columns **11–12** and **13–14** will be considered as defining the "front" and "back" of the structure. The sides are defined by pairs of columns **11–13** and **12–14**.

Extending longitudinally between columns **11–12** and between columns **13–14**, at the front and back of the structure, are horizontally disposed support beams **15**. The beams **15**, like the columns **11–14**, desirably are of wide flange "I" section, of a weight and proportion suitable for the load requirements. As reflected in FIG. **1**, the longitudinally extending beams **15** are secured to the columns **11–14** at regularly spaced intervals up the entire front and back faces of the structure. In accordance with the invention, spacing of the successive beams **15** corresponds with the successive story levels of the structure and, significantly, the beams are located approximately at each of the floor levels of the structure.

In accordance with one important aspect of the invention, alternate pairs of the longitudinally disposed beams **15** are rigidly connected by a plurality of vertically disposed truss beams **16**, such that the assembly of a pair of beams **15** and their connecting vertical beams **16**, rigidly secured to the vertical columns **11–12** and **13–14**, form Vierendeel trusses. As will be appreciated, the vertical dimension of the trusses corresponds with the floor-to-floor dimension of one story of the structure and, in the completed structure, such Vierendeel trusses will extend between pairs of vertical supporting columns at alternate story levels. The described utilization of alternate story Vierendeel trusses provides lateral support for the structural framework in the side-to-side direction and also, as will hereinafter appear, provides an advantageous means for supporting prefabricated apartment modules in the structure.

In the illustrated structure, suitable beams **17**, typically wide flange "I" beams, extend transversely between and are rigidly connected to columns **11–13** and to **12–14**, desirably at each floor level of the structure. Diagonally disposed truss beams **18, 19** are rigidly joined to the beams **17** to form "K-type" trusses between side column pairs at each story level. This provides lateral support for the structure in the front-to-back direction. If desired, the front-to-back lateral support of the structure may be provided by the use of transversely disposed Vierendeel trusses, in place of the K-type trusses. However, since the trusses at the sides of the structure do not, in the illustrated edifice at least, have any significant vertical load-bearing function, the use of the K-type truss for this purpose is considered economically advantageous.

The structural framework unit described above is substantially self-supporting. In this respect, it is contemplated that the framework may, if circumstances warrant, be erected to its ultimate height as a floorless structure, free of internal obstructions, with prefabricated apartment modules subsequently being installed by being lowered into the unobstructed interior. It is also contemplated, of course, that the apartment modules may be installed more or less concurrently with the erecting of the framework. The more advantageous construction technique for a given installation is a function of many factors, such as the ultimate height of the edifice, availability of suitable life equipment, etc.

As will be readily appreciated by reference to FIGS. **1** and **2**, the basic structural framework unit **10** is duplicated as appropriate in the design of a specific apartment complex. Thus, as many basic units **10** as desired may be arranged in side-by-side adjacency, in which event all of the vertical columns on the "interior" sides of units are utilized in common in the structures of adjacent units (e.g., the pair of columns **12–14** of FIGS. **1** and **2**). The basic structural units may also be arranged in front-to-back adjacency, as reflected in FIG. **2**, but in that case it is often advantageous to dispose the units in slightly separated relation, to form a corridor or hallway space **20** between them. As will be appreciated, significant design flexibility is afforded to accommodate the economic, physical and other requirements of an installation and also to provide freedom for the expression of architectural tastes.

In accordance with a further important aspect of the invention, new and advantageous means are provided for independently supporting a plurality of apartment modules within the above-described structural framework unit **10**. The improved means comprise supporting beams **22, 23** which are secured at their ends to the horizontal beams **15** of the Vierendeel trusses and extend transversely across the interior of the framework. As a specific inventive feature, the transverse beams **22, 23** are so formed that their webs and flanges are contained in two (only) right-angularly intersecting planes. Most advantageously, T-section beams are utilized for this purpose, although for some purposes an "X"-section beam, with its webs and flanges in vertical and horizontal planes, could be utilized.

As shown in FIG. **3**, for example, an advantageous structure according to the invention includes T-section beams **22, 23** of two types. The T-beams **22** are utilized as "interior" beams, whereas the T-beams **23** are utilized at the sides of the structural units and may be identified as "exterior" beams.

In the structure of the invention a plurality of prefabricated apartment modules **24–27** is supported within the otherwise "hollow" structural framework in a closely spaced arrangement, descriptively referred to herein as a "compact configuration." Thus a typical edifice may incorporate prefabricated apartment modules of "standardized" dimensions and rectangular configuration. These modules are supported in the structure with their exterior sidewalls **28** (FIG. **4**) spaced apart not significantly more than about 1½ inches and thus are adapted closely to receive the downwardly projecting, vertically disposed webs **29**, forming the "stem" portions of the "interior" transverse T-section beams **22**. The horizontal flanges **30**, constituting the "crossbar" portions of the T-beams **22** are spaced slightly above the exterior upper walls **31** of the apartment modules, sufficient to maintain a clearance between the flanges **29** and the modules directly below when the transverse beams **22** are under load. At the opposite sides of the structure, the T-section transverse beams **23** (FIG. **5**) are disposed with their web or stem portions **32** extending horizontally inward, slightly above the exterior upper walls **31** of the apartment modules **24, 27**. The flange or crossbar portions **33** of the beams **23** extend vertically upward and downward, with the lower portions extending closely alongside the exterior sidewalls **28** of the apartment modules.

In a complete edifice according to the invention, the lowermost story of apartment modules may be supported by any suitable means, such as a poured foundation, conventional beam structures and, if desired, the special T-section beams **22, 23** described above. However, more significant advantages are to be derived from the use of T-section transverse supporting beams for the second and higher story levels of apartment modules. Thus, after placement and support in the frame structure of a lower story level of apartment modules, a level of T-section transverse beams may be installed for supporting the next higher story level of apartment modules. Since all of the webs and flanges of the T-beam sections are contained within two right-angularly intersecting planes, these webs and flanges may be received between the walls of adjacent apartment modules which are closely spaced in a "compact configuration," from the standpoint of vertical as well as horizontal spacing. In this respect, the term "compact configuration" refers specifically to the fact that the vertical spacing between exterior top and bottom walls of vertically adjacent apartment modules is less than the web depth dimension of the interior support beams **22**, and the horizontal spacing between exterior sidewalls of horizontally adjacent apartment modules is less than the horizontal dimension of the flanges of the beams **22**. Thus, in a practical embodiment of the invention, utilizing apartment modules having exterior dimensions of approximately 10 feet 8 inches in width by 8 feet 8 inches in height by 21 feet in length, there typically may be an inch and a half horizontal spacing between horizontally adjacent modules, and about a 4-inch vertical spacing between vertically adjacent modules. At the same time, the overall web depth of the interior T-section support beams may be on the order of 18 inches, and the flange width on the order of 12 or 13 inches. At the edges of the structure, the flange height of the T-section beams **23** may be on the order of 16 inches, and the horizontal web depth dimension may also be on the order of 16 inches.

By utilizing a beam configuration consisting of webs and flanges intersecting in only two right-angularly disposed planes, these transverse supporting beams **22, 23** may be nested within very narrow spaces between apartment modules arranged in compact configuration. This results in very significant efficiencies in space utilization, particularly in respect of the utilization of vertical space. With the structure of the invention, it is possible to realize a savings of perhaps as much as 10 percent in the vertical space required to contain an apartment module having an 8-foot interior vertical clearance. In

more practical terms, this means that in an edifice of around 20 or so stories in height, approximately two extra stories of apartment modules may be contained within a structural framework of given height, as compared to structures of more conventional design.

In a typical structure according to the invention, containing apartment modules of about 21 feet in length, the interior clearance space between opposed pairs of Vierendeel trusses may be on the order of 23 feet. The T-section transverse support beams have a length dimension sufficient to span substantially the entire distance between related pairs of the Vierendeel trusses and thus will project beyond the ends of the modules. In the illustrated structure (FIG. 7) mounting plates **34** are welded or otherwise secured to the webs **35** of the horizontal truss beams **15**, just below the upper flanges **36** thereof. The mounting plates extend inwardly into overlapping relation with the depending web sections **29** of the interior T-section beams **22**, and are secured thereto by bolts **37** or other means. Advantageously, the upper surfaces of the T-beam flanges **30** and the truss beam flanges **36** are substantially aligned in a horizontal plane.

The exterior T-section beams **23** advantageously are secured directly to the vertical columns **11–14**. For this purpose, a mounting plate **38** is bolted to a flange **39** of the column and extends into overlapping relation with the inside surface of the beam flange **33** below the web **32**. Bolts **40** or other suitable means may be utilized to secure the beam in position, in the manner shown in FIG. **6**. As reflected in FIG. **3**, the exterior T-beams **23** are so mounted that their horizontally disposed webs **32** are in a common plane with the horizontally disposed flanges **30** of the interior T-beams, and desirably also with the upper flanges of the truss beams **15, 17**.

As reflected in FIG. **2**, the apartment modules are supported in the structure only along their lower lateral edges, by means of the transverse beams **22, 23**, a clearance space **41** being provided at both ends of the apartment modules. In a structure such as reflected in FIG. **2**, where a plurality of structural units are arranged in front-to-back adjacency, clearance spaces for any apartment module having an interior access door, may be bridged over by a suitable walkway (not shown) leading to the corridor space **20**. The clearance spaces for modules not having an interior access door, or the clearance space alongside access door walkways, may advantageously be utilized for plumbing, electrical service, etc.

In the construction of a building, after a first story of apartment modules has been suitably positioned and supported in the framework structure, the transverse beams **22, 23** for the next successive story are inserted into the structure and secured to the truss beams **15** and columns **11–14**, as previously described. The structure is then ready to receive a second story level of apartment modules (e.g., modules **42–45**, FIG. **3**), lowered one at a time into the interior of the framework. To facilitate proper transverse alignment of the modules within the structure, the interior T-beams **22** advantageously are provided with locating lugs **46** at a plurality of locations along the length of the beams. Desirably, the lugs are aligned with the vertical planes of the beam webs **29** and desirably are about 1 inch in thickness for a module spacing of 1½ inches. At the sides of the structure, the modules are, of course, located by the upward projection of the T-beam flanges **33**.

After thus being rested on and supported by the T-beams, the apartment modules may be suitably bolted or otherwise secured in place, and the necessary electrical and plumbing connections, etc., may be made thereto. In many instances, a housing or office unit may comprise more than one module, and there may, for example, be standard prefabricated modules for such typical household units as bedrooms, kitchens, etc. Where the housing or office unit does consist of more than one module, appropriate interconnections, provided for in the prefabrication, are made between the modules after installation in the structure.

The construction of an entire building complex, regardless of its height or lateral extent, proceeds substantially in the manner outlined.

For optimum utilization of the techniques of the invention, the free span of the Vierendeel trusses, between pairs of vertical columns, may be on the order of 43 feet. This will accommodate the support, over the span of the Vierendeel trusses, of four apartment modules, disposed side-by-side in a compact configuration, where the apartment modules have a 10-foot clear interior width and a 10-foot, 8-inch exterior width, and where a 1½-inch separation between modules is observed. In a structure as described, the horizontal beams **15**, which form the Vierendeel trusses, are spaced approximately on 9-foot centers (vertically). Where four apartment modules are supported over a free span, the thusly spaced horizontal truss beams **15** may be interconnected by three vertical truss beams **16**, which are aligned with the spacing between adjacent apartment modules. This specific arrangement provides an optimum blend of functional and aesthetic considerations.

The structure of the invention represents a significant advance in the construction of such high-rise structures as housing apartments, office buildings and the like. The advantages in utilizing prefabricated apartment modules is, of course, self-evident, and the present invention provides an economical and otherwise highly advantageous structural concept for the utilization of such prefabricated modules.

An inventive feature of particular importance is the utilization of supporting beams for the prefabricated modules which are arranged to have their webs and flanges contained in two right-angularly intersecting planes and serve to support the prefabricated modules along their lateral lower edges. This arrangement is such that the supporting beams, having principal web and flange dimensions as large as necessary to safely perform their supporting functions, may be nested within narrow spaces provided between adjacent apartment modules arranged in compact configuration. In the completed structure, a significant increase in useable space is realized in relation to the overall cubic content of the structure.

While Vierendeel trusses are well-known structural units, their use in the specific manner and context of this invention is both new and highly advantageous. The use of alternate story Vierendeel trusses enables a plurality of apartment modules to be supported on each story level of a stable peristylar framework solely by beams extending under the lower lateral edges of the modules, while at the same time providing for maximum unobstructed area at the front of the structure. Thus, as will be evident in FIG. **1**, the apartment modules at alternate story levels are totally unobstructed at the front. Between these totally unobstructed levels, the only "obstructions" are the vertical beams **16** of the Vierendeel trusses, which are disposed between adjacent apartment modules and, from a practical standpoint, do not constitute a significant visual obstruction.

Vierendeel trusses and T-section (or similar) transverse beams are to great advantage utilized in combination, in the manner described herein. However, there are also important advantages to be derived from the use, in a similar context, of either one without the other.

The structure of the invention significantly maximizes the extent to which fabrication of components may be accomplished prior to shipment to the erecting site. In addition to the obvious economies to be realized from "factory" fabrication, important advantages are derived by minimizing the use of field crews, which often must be recruited to a large degree from the locale of the installation and may not be available in the necessary numbers for the skills and experiences desired.

It will be understood, of course, that the specific form of the invention herein illustrated and described is intended to be representative only, as certain modifications may be made therein without departing from the clear teachings of the disclosure. Accordingly, reference should be made to the following appended claims in determining the full scope of the invention.

I claim:

1. A modular high-rise structure for supporting a plurality of apartment modules, in side-by-side relation on a plurality of story levels which comprises

a. cooperating front and back pairs of vertical support columns disposed at the front and back of the structure,

b. longitudinal support beams connected to and extending horizontally between pairs of front columns and pairs of back columns, and cooperating pairs of said longitudinal support beams being disposed at the same story level in the structure,

c. said longitudinal support beams being spaced apart a distance greater than of the front-to-back length dimension of said apartment modules and having a length greater than the combined width of the number of modules to be supported in side-by-side relation to accommodate installation of said modules in a vertical direction,

d. the vertical opening between adjacent longitudinal beams being less than the vertical height of said apartment modules,

e. 1 plurality of transverse support beams of a length greater than the front-to-back dimension of said modules, supported by and extending between cooperating pairs of longitudinal support beams for engaging and supporting said apartment modules,

f. said transverse support beams having one or more webs disposed in a single vertical plane and one or more flanges disposed in a single horizontal plane,

g. said transverse support beams being aligned with the lower front-to-back edges of the apartment modules, with said front-to-back edges being supported by flanges of said transverse beams,

h. a horizontally adjacent pair of modules being supported along adjacent lower edges by a transverse support beam having a pair of horizontal flanges, and said adjacent modules being spaced apart a distance less than the combined width of said flanges, the vertical web of said beam extending between a pair of horizontally adjacent modules and having an overall height greater than the space between vertically adjacent modules,

i. the open spacing between horizontally adjacent transverse beams being less than the width of said modules, and the open spacing between vertically adjacent transverse beams being less than the height of said modules,

j. whereby the modules of said structure may be positioned in a compact configuration with the space between horizontally and vertically adjacent modules being substantially smaller than the overall horizontal and vertical dimensions of the supporting beams.

2. The modular high-rise structure of claim 1, further characterized by

a. said transverse beams being substantially of T-shaped cross section,

b. at least the stem portions of said T-shaped beams being closely received between the walls of adjacent apartment modules.

3. The modular high-rise structure of claim 2, further characterized by

a. interior T-shaped beams being oriented with their stem portions extending vertically downward between vertical walls of horizontally adjacent apartment modules and with their crossbar portions extending horizontally between vertically adjacent apartment modules,

b. exterior T-shaped beams being oriented with their stem portions extending horizontally between vertically adjacent exterior apartment modules and with their crossbar portions disposed along portions of the exterior vertical walls of vertically adjacent exterior apartment modules.

4. A modular high-rise structure according to claim 1, further characterized by

a. vertical truss beams extending between alternate pairs of adjacent longitudinal support beams and forming Vierendeel truss assemblies.

5. A modular high-rise structure according to claim 4, further characterized by

a. the spacing of said vertical columns accommodating the side-by-side placement of four apartment modules, and

b. said Vierendeel truss assemblies incorporating three vertical beams aligned substantially with the spaces between adjacent apartment modules.

6. A modular high-rise structure according to claim 1, further characterized by

a. Vierendeel trusses connecting pairs of said columns at a plurality of levels,

b. said Vierendeel trusses comprising vertically spaced pairs of longitudinal support beams and vertical truss elements rigidly connecting such pairs of beams,

c. said transverse support beams being transversely disposed and being supported at their ends by horizontal beams of said Vierendeel trusses.

* * * * *