Dec. 18, 1951 G. W. MOORE 2,578,896

COMBINED SCRAPER AND CUTTER

Filed Aug. 11, 1950 2 SHEETS—SHEET 1

Fig. 1

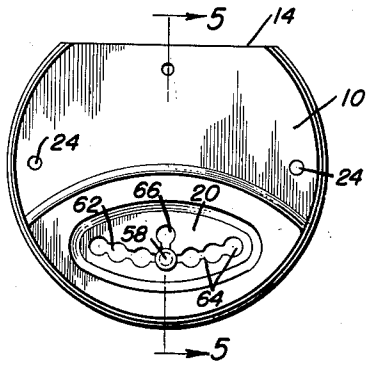

Fig. 2

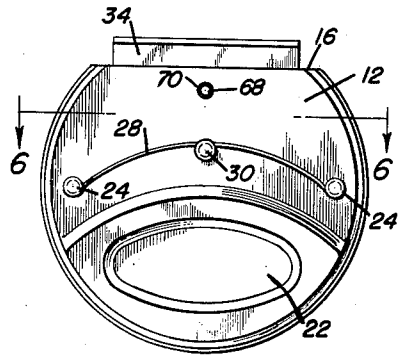

Fig. 3

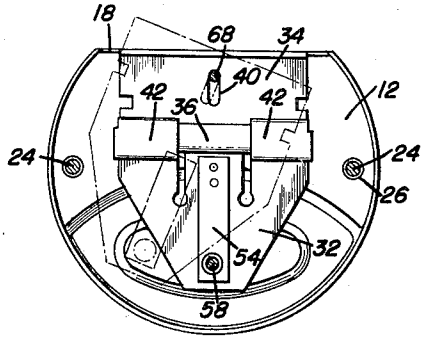

Fig. 4

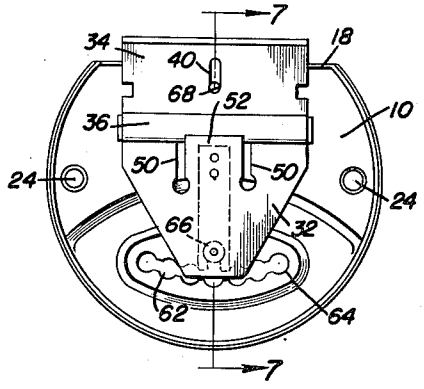

Fig. 5

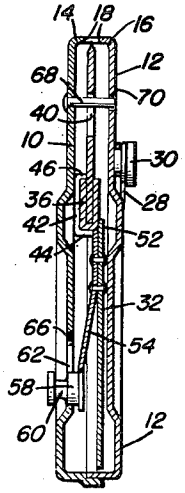

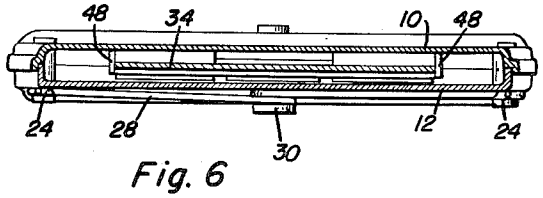

Fig. 6

Inventor

George W. Moore

By Clarence A. O'Brien and Harvey B. Jacobson

Attorneys

Dec. 18, 1951 G. W. MOORE 2,578,896

COMBINED SCRAPER AND CUTTER

Filed Aug. 11, 1950 2 SHEETS—SHEET 2

Fig. 11

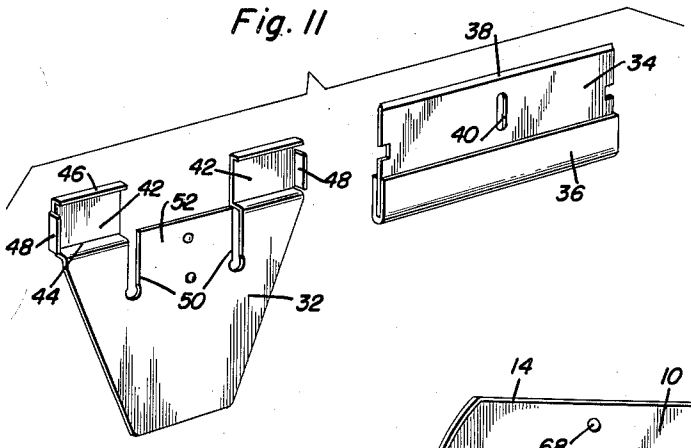

Fig. 10

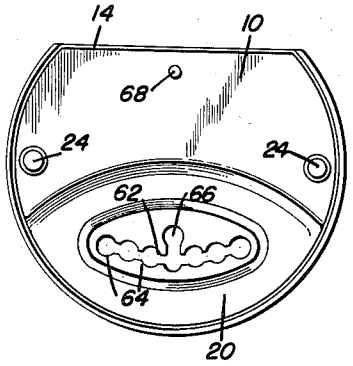

Fig. 7

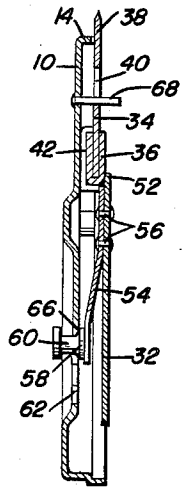

Fig. 8

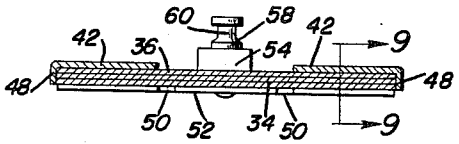

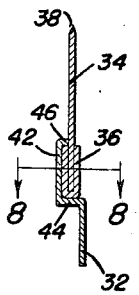

Fig. 9

George W. Moore
INVENTOR.

BY Clarence A. O'Brien and Harvey B. Jacobson
Attorneys

Patented Dec. 18, 1951

2,578,896

UNITED STATES PATENT OFFICE

2,578,896

COMBINED SCRAPER AND CUTTER

George W. Moore, Twin Falls, Idaho

Application August 11, 1950, Serial No. 178,950

6 Claims. (Cl. 30—320)

1

This invention comprises novel and useful improvements in a combined scraper and cutter and more specifically pertains to an improved razor blade holder for selectively positioning a safety razor blade in various angular positions with respect to a casing whereby the blade may be adapted for various functions.

The primary object of this invention is to provide a razor blade holder which shall be capable of accommodating, securing and utilizing a conventional form of safety razor blade as a scraper or cutting tool; and for positioning the razor blade in various predetermined and selected exposed positions for different uses of the blade.

A further object of the invention is to provide an improved razor blade holder having an improved means for securely holding a conventional form of razor blade for manipulation by the device, and yet wherein the razor blade may be readily applied to or easily removed from the holder.

Yet another object of the invention is to provide a simplified construction of a razor blade holder wherein the casing of the device constitutes a comfortable, convenient and efficient storage receptacle and handle for a razor blade.

A still further object of the invention is to provide an improved razor blade holder wherein the razor blade and its carrier are normally housed and concealed within a casing and may be selectively extended from the casing in various different predetermined positions for use.

A still further object of the invention is to provide an improved razor blade holder as set forth in the preceding object wherein improved means are provided for adjustably positioning the razor blade and its carrier with respect to the casing; and for locking or retaining the razor blade in selected adjusted position.

And a final important object of the invention to be specifically enumerated herein, is to provide an improved razor blade holder having a sectional casing for retaining a razor blade with its carrier therein; together with means associated with the casing for yieldingly urging the razor blade and its carrier into frictional engagement with one side of the casing to enable the razor blade and carrier to be firmly gripped or held in the casing; accompanied by means associated with and extending exteriorly of the casing for selectively extending the razor blade into various adjusted positions or retracting the same into the casing; and wherein the casing

2

sections may be detachably secured together in an approved manner.

These, together with various ancillary features and objects of the invention, which will later become apparent as the following description proceeds, are attained by the present invention, a preferred embodiment of which has been illustrated, by way of example only, in the accompanying drawings, wherein:

Figure 1 is a top plan view of the casing of the device, the razor blade and its carrier being in retracted or recessed position;

Figure 2 is a bottom plan view of the device in Figure 1 but showing the razor blade in its extended position;

Figure 3 is a view similar to Figure 1 but with the cover section of the casing removed, the blade and carrier being shown in full lines in the retracted position and in dotted lines a partially extended and inclined position;

Figure 4 is a view similar to Figure 2 but with the back section of the casing removed;

Figure 5 is a vertical transverse sectional view taken substantially upon the plane indicated by the sectional line 5—5 of Figure 1;

Figure 6 is a vertical transverse sectional view taken substantially upon the plane indicated by the sectional line 6—6 of Figure 2;

Figure 7 is a vertical transverse sectional view taken substantially upon the plane indicated by the sectional line 7—7 of Figure 4;

Figure 8 is a sectional view taken substantially upon the plane indicated by the sectional line 8—8 of Figure 9, of the blade and carrier assembly of the invention;

Figure 9 is a sectional view taken substantially upon the plane indicated by the sectional line 9—9 of Figure 8 of the blade and carrier of the invention;

Figure 10 is a top plan view, upon a somewhat enlarged scale, of the top or cover section of the casing; and,

Figure 11 is a group perspective view of a conventional razor blade and razor blade carrier forming a part of the present invention.

Referring now more specifically to the accompanying drawings, wherein like numerals designate similar parts throughout the various views, it will be seen that the invention includes a sectional casing, preferably of an economical material having the requisite strength such as sheet metal, this casing comprising a pair of complementary sections including a top section 10 and a back section 12. These sections have mating flanges upon their peripheries for engagement

with each other and to provide a chamber within or between the sections.

Preferably the sections are disc shaped, but are provided with straight edges 14 and 16 for the sections 10 and 12 respectively, these edges being cut away to provide mating or registering slots 18 through which may be extended a razor blade as set forth hereinafter.

Conveniently, the casing is relatively flat and thin, and especially adapted for comfortable engagement by the hands of the user. To facilitate the gripping engagement of the device by the user, the two sections may be provided with recessed portions or regions 20 and 22 which furnish a good finger grip for the user.

In order to detachably secure the sections together, one of the sections, such as the front section 10, is provided with locking pins 24 which extend inwardly of the casing and are removably received and extend through locking apertures 26 in the back section 12. A locking means is provided for releasably retaining the locking projections or pins in the locking apertures, this means, as shown best in Figure 2, comprising a resilient spring member such as a wire 28 which is centrally secured to a fastening lug 30 which is secured to the back section 12, the ends of this wire spring having hook portions engaging annular grooves in the locking pins 24.

Referring now more specifically to Figure 11, in conjunction with Figures 8 and 9, it will be seen that a carrier is provided for supporting a razor blade for association with and manipulation by the casing which forms a handle for the same.

For this purpose, there is provided a substantially triangular plate 32, although obviously the same may be of any desired shape, this plate constituting a carrier for a conventional form of razor blade 34 which has a reinforced rim 36 opposite its cutting edge 38, the razor blade having intermediate its ends a slot 40.

The blades specifically adapted for use in the present invention is a conventional form of single edged safety razor blade known to the trade as a Gem safety razor blade.

The plate 32 forming the carrier is provided at its enlarged end with a pair of channel numbers 42, which are slightly offset from plane of the carrier 32 and are disposed in alignment with each other at opposite sides of the carrier. These channel members include side walls 44 and 46 which are adapted to snugly receive and seat the reinforced rim 36 of the razor blade. At the ends of the channels there are provided flanged portions 48 constituting retaining walls which gage the ends of the reinforcing rim 36 and thus resiliently, securely but detachably seat and retain the rim of the razor blade.

In order to more securely retain the razor blade in the carrier, the latter is provided with a pair of parallel slots 50, between which is provided a tongue 52 whose end extends slightly beyond the channel walls 44 and slightly overlies the adjacent ends of the channels 42. The slots 50 impart a slight resiliency to the tongue 52, so that the razor blade will be yieldingly retained in the channel members. Thus, the rim 36 of the razor blade may be seated in the channels upon the bottom walls 42 thereof, and between the side walls 44 and 46, and within the in walls 48. The blade may then be twisted downwardly until the rim 36 is under the resilient tongue 52, the proportions of the part being such that the walls 44, 46 and 48 are of substantially the same thickness as the reinforcing rim or slightly less than the same, whereby the resilient tongue 52 will yieldingly maintain the rim in the retaining channels of the carrier.

Upon the other side of the carrier from that shown in Figure 11, there is provided a resilient metallic strip or finger 54 which is riveted or otherwise fixed and secured to the carrier as at 56, and at its outer end, which terminates adjacent the smaller end of the carrier plate 32, is provided with a pin or projection 58 which extends exteriorly of the casing for actuation of the carrier.

As will be apparent from Figure 7, the projection tip is provided with annular groove 60 intermediate its ends which facilitates the locking or securing of the carrier in various adjusted positions the amount to be now described.

Referring now again to the casing, it will be seen that the cover 10 is provided with an arcuate slot 62 disposed within the recessed portion 20, this slot having a plurality of notches, recesses or cut-out portions 64 in its periphery, and having a central portion 66 which extends towards the flat edge 14 of the section 10.

The end of the projecting pin 58 extends through the slot 62 and is movable therealong, with the annular grooves 60 of the pin being adapted to move along the arcuate extent of the slot 62 and to be selectively positioned in the recesses 64 or in the enlarged portion 66. As will be apparent, particularly by reference to Figures 3 and 4, this arcuate travel of the actuating pin 58 will serve to tilt the razor blade and its carrier when the pin is at either end of the slot and to thereby cause the corresponding edge of the razor blade only to be projected from the razor blade slot 18. When the actuating pin is in the midportion of the slot, the razor blade and its carrier will be in their retracted position as shown in full lines in Figure 3. However, when the pin is moving to the enlarged portion 66 of the slot, the razor blade and carrier will be extended, with the razor blade protruding from the slot as shown in Figure 2, and the razor blade being evenly exposed across the length of the slot.

As will be readily understood, the resiliency of the finger 54 serves to yieldingly urge the actuating pin 58 into locking position with the various locking portions 64 and 66 of the slot. However, when the pin is depressed against the action of the spring 54, the annular groove 60 will be brought into register with the slot and the pin together with the carrier may be readily shifted to its various adjusted positions.

A guide means is provided consisting of a guide pin 68 which is carried by the upper section 10 and extends into the chamber within the casing, this pin extending through the previously mentioned slot 40 of the razor blade and through an aperture 70 of the rear casing section 12, as shown in Figures 5 and 7. This pin serves as a pivot pin about which the razor blade and its carrier may be oscillated or pivoted during the adjustment of the pin 58 through the slot 62, and also serves as a guide for the razor blade in its evenly protruded position as shown in Figure 4.

From the foregoing, it is believed that the construction and operation of the device will be readily apparent. It will be observed that by means of the carrier and its adjusting means, a conventional form of razor blade may be selectively entirely retracted into and housed within the casing of the device whereby the same will be stored without danger of a person being injured by the blade.

When desired, the razor blade may be evenly protruded from the carrier as shown in Figure 2 to constitute a scraper or the like. Alternatively, either edge of the blade may be adjustably extended from the edge of the blade slot of the carrier as suggested in dotted lines in Figure 3 when it is desired to employ the blade as a cutting instrument.

From the foregoing, the construction and operation of the device will be readily understood and further explanation is believed to be unnecessary. However, since numerous modifications and changes will readily occur to those skilled in the art after a consideration of the foregoing specification and accompanying drawings, it is not desired to limit the invention to the exact construction shown and described, but all suitable modifications and equivalents may be resorted to, falling within the scope of the appended claims.

Having described the invention, what is claimed as new is:

1. A razor blade holder comprising a casing having a blade receiving slot, a razor blade carrier having a razor blade mounted thereon, said carrier being received in said casing, means operable exteriorly of said casing for moving said carrier to extend the razor blade through said slot in selective adjusted position, said razor blade having a slot, a pin in said casing extending through said razor blade slot for guiding said blade and carrier in said casing.

2. A razor blade holder comprising a casing having a blade receiving slot, a razor blade carrier having a razor blade mounted thereon, said carrier being received in said casing, means operable exteriorly of said casing for moving said carrier to extend the razor blade through said slot in selective adjusted position, said razor blade having a reinforcing rim opposite its cutting edge, said carrier consisting of a plate, offset spaced channel portions on said plate receiving the edges of said reinforcing rim, a retaining tongue on said plate engaging the midportion of said rim and on the opposite side from said channels.

3. A razor blade holder comprising a casing having a blade receiving slot, a razor blade carrier having a razor blade mounted thereon, said carrier being received in said casing, means operable exteriorly of said casing for moving said carrier to extend the razor blade through said slot in selective adjusted position, said means comprising an arcuate slot in said casing, a projection on said carrier extending through said arcuate slot for movement therealong.

4. A razor blade holder comprising a casing having a blade receiving slot, a razor blade carrier having a razor blade mounted thereon, said carrier being received in said casing, means operable exteriorly of said casing for moving said carrier to extend the razor blade through said slot in selective adjusted position, said means comprising an arcuate slot in said casing, a projection on said carrier extending through said arcuate slot for movement therealong, said arcuate slot having spaced locking recesses for releasably retaining said projection in adjusted position.

5. A razor blade holder comprising a casing having a blade receiving slot, a razor blade carrier having a razor blade mounted thereon, said carrier being received in said casing, means operable exteriorly of said casing for moving said carrier to extend the razor blade through said slot in selective adjusted position, said casing having complementary sections, locking pins on one section, locking apertures on the other section receiving said pins, a locking spring releasably engaging said pins and preventing their withdrawal from said locking apertures.

6. A razor blade holder comprising a casing having a blade receiving slot, a razor blade carrier having a razor blade mounted thereon, said carrier being received in said casing, means operable exteriorly of said casing for moving said carrier to extend the razor blade through said slot in selective adjusted position, said casing having complementary sections, locking pins on one section, locking apertures on the other section receiving said pins, a locking spring releasably engaging said pins and preventing their withdrawal from said locking apertures, said spring comprising a resilient wire centrally secured to said other section and having hooked ends engaging said pins.

GEORGE W. MOORE.

REFERENCES CITED

The following references are of record in the file of this patent:

UNITED STATES PATENTS

Number	Name	Date
2,291,514	Warner et al.	July 28, 1942
2,404,141	Nelson	July 16, 1946