Jan. 16, 1951 I. R. PHELPS 2,538,471

APRON

Filed April 17, 1948 2 Sheets-Sheet 1

Fig. 1.

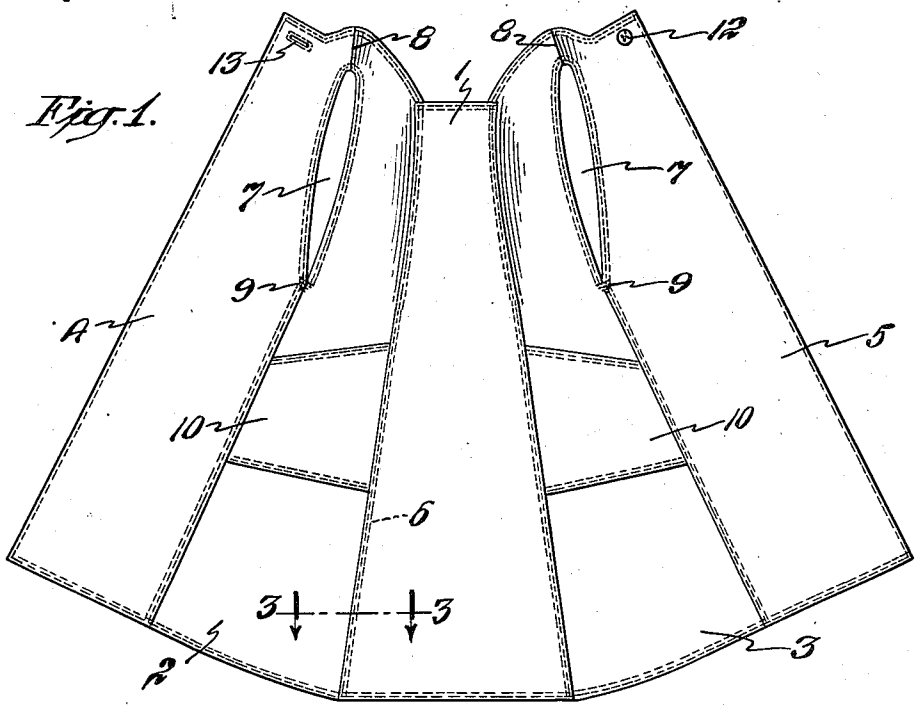

Fig. 3.



Fig. 2.

INVENTOR.
ISABELLE R. PHELPS
BY
D Malcolm
ATTORNEY

Jan. 16, 1951 I. R. PHELPS 2,538,471

APRON

Filed April 17, 1948 2 Sheets-Sheet 2

Fig. 4.

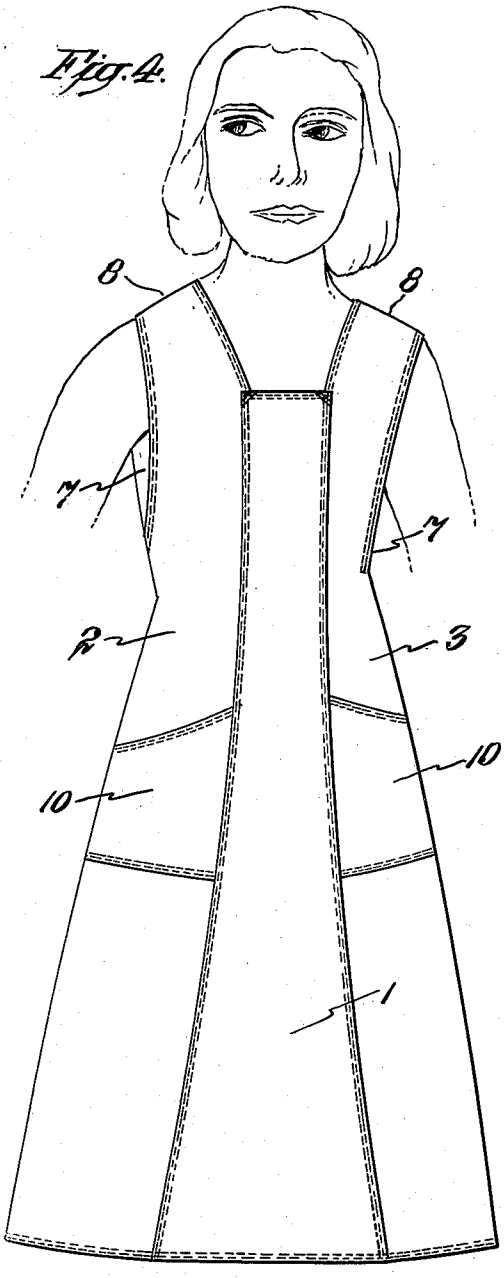

Fig. 5.

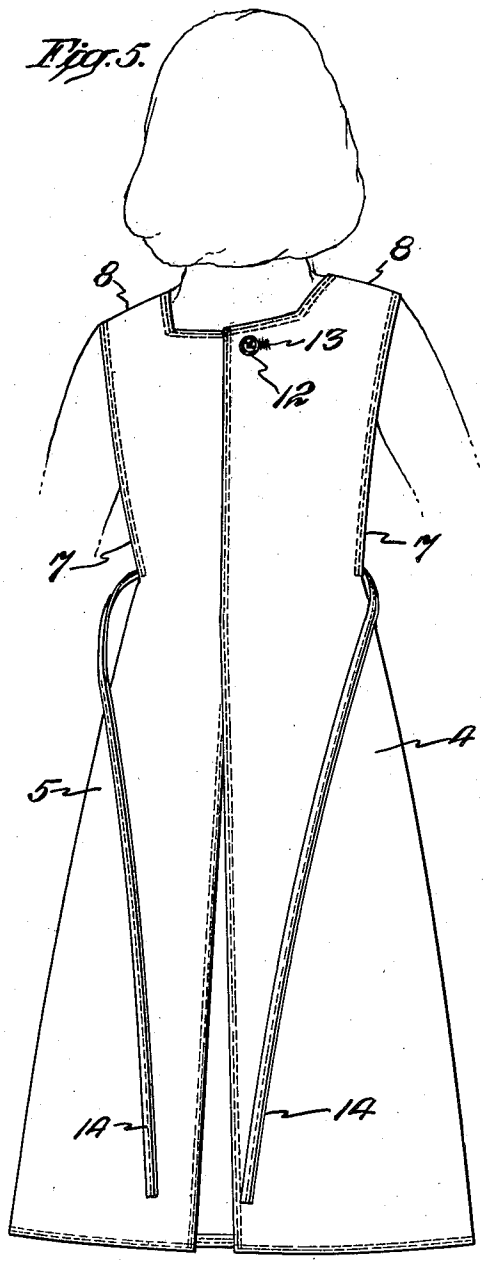

INVENTOR.
ISABELLE R. PHELPS

BY

D Malcolm

ATTORNEY

Patented Jan. 16, 1951 2,538,471

UNITED STATES PATENT OFFICE

2,538,471

APRON

Isabelle R. Phelps, New York, N. Y., assignor to Turner Jones Company, Inc., New York, N. Y., a corporation of New York

Application April 17, 1948, Serial No. 21,719

3 Claims. (Cl. 2—48)

1

This invention relates to women's and children's aprons which are suspended over the shoulders of the wearer, and it has for its object to provide a novel and improved garment of this type which is simple in construction, economical to manufacture, and while designed primarily for heavy service is nevertheless comfortable and figure flattering in wear.

Another object of the invention is to provide a garment of the above type which is adapted to fit a wide range of figure sizes, thus reducing considerably the number of different sizes which must be made and stocked by the manufacturer and retailer.

Still another object is to provide an apron of the type specified which is composed of a minimum number of parts shaped and assembled, and with a single neck fastening at the back, so that it hangs with a substantially form-fitting effect while affording perfect freedom of movement to the wearer in all positions of the body.

A further object is to provide the apron with suitable tie strings which may normally hang inside the garment, unused and unseen, but may easily be drawn out through the specially shaped armholes at the waistline and tied at the back of the garment to produce a more pronounced form-fitting effect when desired.

Various other objects and advantages will be apparent as the nature of the invention is more fully disclosed.

Although the novel features which are characteristic of this invention are set forth more in detail in the claims appended hereto, the nature and scope of the invention may be better understood by referring to the following description, taken in connection with the accompanying drawings forming a part thereof, in which a specific embodiment has been set forth for purposes of illustration.

In the drawings:

Fig. 1 is a plan view of the outer face of an apron embodying the invention, spread out flat to illustrate the construction and assembly of the several panels;

Fig. 2 is a similar view of the reverse or inside of the garment, showing the tie strings adjacent the armholes at the waistline;

Fig. 3 is a detail cross-section through one of the seams, taken on line 3—3 of Fig. 1;

Fig. 4 is a front view of the apron, showing same as worn on the figure; and

Fig. 5 is a rear view with the tie strings extending out through the armholes in position to be tied at the back of the garment.

2

In the following description certain specific terms are used for convenience in referring to the various details of the invention. These terms, however, are to be interpreted as broadly as the state of the art will permit.

The apron shown in the drawings is composed of five longitudinal panels, comprising a front panel 1, side panels 2 and 3, and rear panels 4 and 5, stitched together with flat double seams 6 which provide the desired strength and give the garment a neat tailored appearance.

The garment shown herein for purposes of illustration is intended primarily for heavy service on the farm, in factories, etc., and is preferably composed entirely of blue denim selected for its wearing qualities, although it will be understood that other suitable materials may be employed according to the purpose to which the garment is to be put.

The upper portions of the mating side and rear panels 2—4 and 3—5 are cut out to provide elongated armholes 7 which extend all the way from shoulder seams 8 to the waistline, which affords complete freedom of movement without constriction to even the stoutest arms, as will hereinafter more fully appear. The seams at the lower extremities of the armholes, as well as at other points of strain, are bartacked as illustrated at 9, to prevent ripping.

The front panel 1 and side panels 2 and 3 are shaped and tapered as illustrated and joined at the longitudinal edges to form a shaped bust portion to prevent binding, and are shaped in at the waistline to provide a figure-flattering fit which is enhanced by the absence of horizontal seams at the waistline. At the same time, the longitudinal tapering of the front and side panels provides a gently flared skirt which insures freedom of leg motion without bulk. Two patch pockets 10 on panels 2 and 3 have their side edges sewed into the seams which join said panels to the front and rear panels of the garment, thus providing added strength since a pocket sewed directly to the fabric might tear if caught.

When the apron is donned, as shown in Figs. 4 and 5, it covers the entire figure and the free longitudinal edges of rear panels 4 and 5 overlap and are closed by a single button 12 and cooperating buttonhole 13 at the top or neck, as best shown in Fig. 5. When thus worn, the apron rests comfortably on the shoulders with no drag on the neck, and the garment hangs comfortably from the single button closure and forms a figure-fitting coverall without need for any additional closing at the waist. At the same time,

the absence of buttons or other fastening means below the neck enables the garment to expand freely and thus readily accommodate itself to all bending and sitting positions of the body.

At the inside of the apron, adjacent each armhole 7 and at the waistline, is secured a tie string 14 slightly shorter than the skirt portion of the apron so that said strings 14 will ordinarily hang down inside the apron, unused, unseen and out of the way, even when bending. However, for use when preferred, as in a job where continued and excessive bending is required, the strings 14 may be pulled out through the armholes 7 as shown in Fig. 5 and tied at the back to hold the apron closely to the figure.

It will be seen from the foregoing that the wide cut front of the garment, the deep arm openings, the single fastening at the neck and absence of fasteners at the waistline, and the shape and flare of the panels all combine to permit the use of a single size apron for a wide range of different figure sizes, and when so worn enable the apron to accommodate itself to differently proportioned bodies with complete comfort and freedom of movement to the wearer.

Although a specific embodiment has been shown and described herein for purposes of illustration, it will be evident to those skilled in the art that the invention is capable of various modications and adaptations within the scope of the appended claims.

The invention claimed is:

1. A figure covering apron adapted to be suspended over the shoulders of the wearer and comprising connected front and side panels forming a bust portion and a skirt portion, rear panels secured to said side panels and having outer longitudinal edges adapted to overlap at the back, said side and rear panels being cut out at their juncture to form deep armholes extending from the shoulder line to the waistline of said apron, means for securing the overlapping edges of said rear panels together at the top, and tie strings secured inside said apron at the waistline adjacent said armholes, said tie strings being shorter than the skirt portion of said apron to conceal said strings from view and being long enough to extend out through said armholes for tying together at the back of said apron.

2. A figure covering apron adapted to be suspended over the shoulders of the wearer and comprising elongated front and side panels tapered and connected at their longitudinal edges to form a shaped bust portion and a flared skirt portion, rear panels secured to the longitudinal edges of said side panels and having outer longitudinal edges adapted to overlap at the back, the connected edges of said side and rear panels being cut out to form deep armholes extending from the shoulder line to the waistline of said apron, means for securing the overlapping edges of said rear panels together at the top, and tie strings secured inside said apron at the waistline adjacent said armholes, said tie strings being shorter than the skirt portion of said apron to conceal said strings from view and being long enough to extend out through said armholes for tying together at the back of said apron.

3. A figure covering apron adapted to be suspended over the shoulders of the wearer and comprising elongated front and side panels tapered and connected at their longitudinal edges to form a shaped bust portion and a flared skirt portion, rear panels secured to the longitudinal edges of said side panels and having outer longitudinal edges adapted to overlap at the back, the connected edges of said side and rear panels being cut out to form deep armholes extending from the shoulder line to the waistline of said apron, a single fastener for securing the overlapping upper edges of said rear panels together and permitting the garment below said fastener to expand without restriction, and tie strings secured inside said apron at the waistline adjacent said armholes, said tie strings being shorter than the skirt portion of said apron to conceal said strings from view and being long enough to tie at the back of said apron when extended out through said armholes.

ISABELLE R. PHELPS.

REFERENCES CITED

The following references are of record in the file of this patent:

UNITED STATES PATENTS

Number	Name	Date
Re. 19,669	Schrank	Aug. 13, 1935
D. 87,675	Murrall	Aug. 30, 1932
D. 93,963	Borger	Dec. 4, 1934
D. 136,916	Pons	Dec. 28, 1943
D. 137,427	Nachman et al.	Mar. 7, 1944
2,091,084	Quinn	Aug. 24, 1937
2,425,402	Sieloff	Aug. 12, 1947

OTHER REFERENCES

McCall Pattern Book, The McCall Corp., publishers, 230 Park Avenue, New York, N. Y., page 322, pattern No. 5,322, February 1945.