Aug. 7, 1956 J. W. BACH ET AL 2,757,927

SHEET FEEDING AND STRAIGHTENING DEVICE

Filed Jan. 17, 1951

3 Sheets-Sheet 1

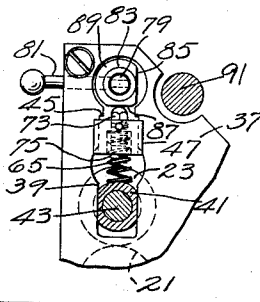

FIG. 2.

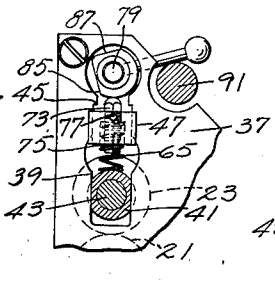

FIG. 3.

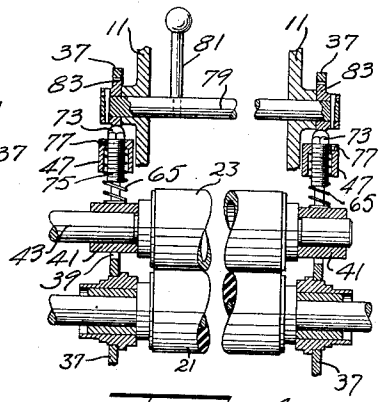

FIG. 4.

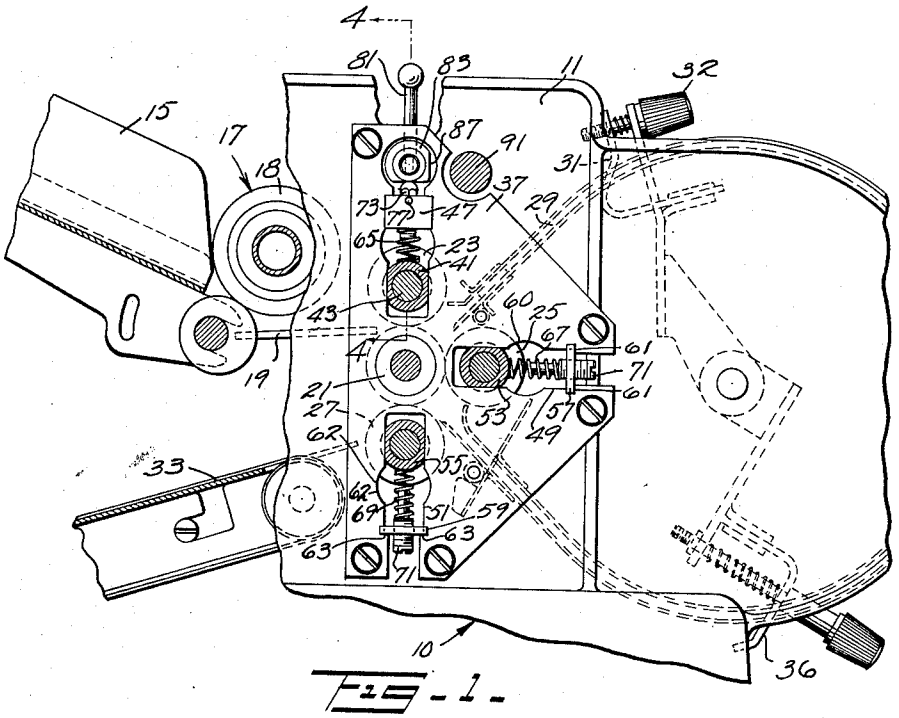

FIG. 1.

INVENTORS
John William Bach
Robert L. Peet, Jr
BY
Edwin H. Oliver
ATTORNEY

Aug. 7, 1956 J. W. BACH ET AL 2,757,927

SHEET FEEDING AND STRAIGHTENING DEVICE

Filed Jan. 17, 1951 3 Sheets-Sheet 2

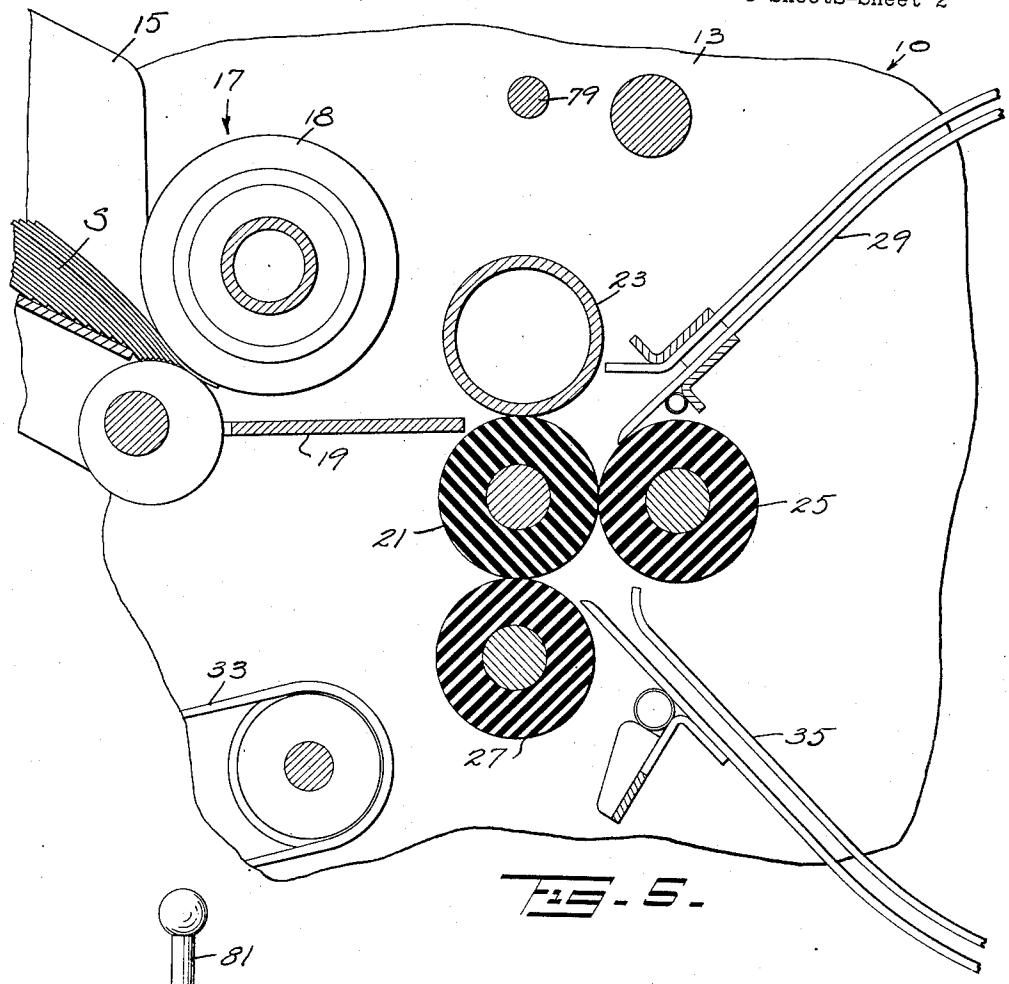

FIG. 5.

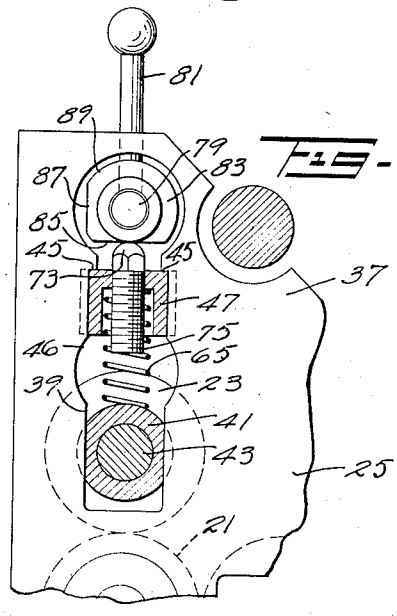

FIG. 6.

INVENTORS
John William Bach
Robert L. Peet, Jr.
BY
Edmund W. Oliver
ATTORNEY

Aug. 7, 1956 J. W. BACH ET AL 2,757,927

SHEET FEEDING AND STRAIGHTENING DEVICE

Filed Jan. 17, 1951

3 Sheets-Sheet 3

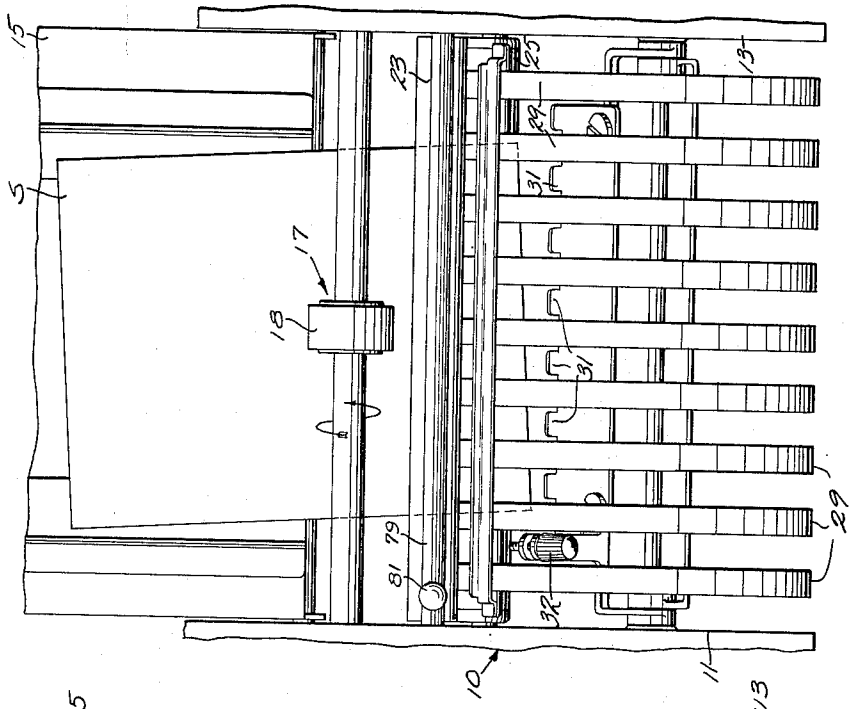

FIG. 7.

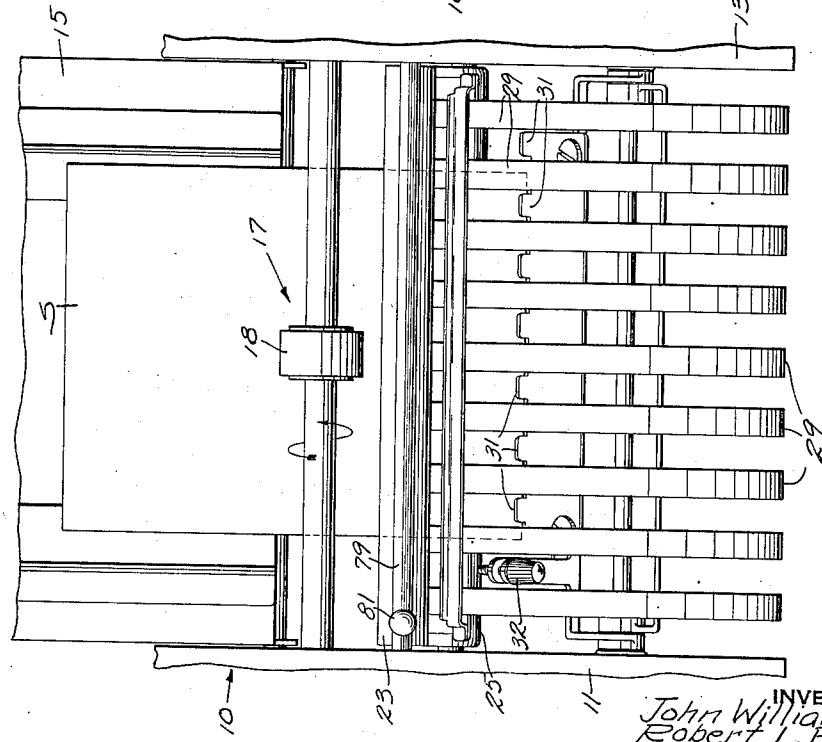

FIG. 8.

INVENTORS
John William Bach
Robert L. Peet, Jr.
BY
Edwin H. Oliver
ATTORNEY

United States Patent Office 2,757,927 Patented Aug. 7, 1956

2,757,927

SHEET FEEDING AND STRAIGHTENING DEVICE

John William Bach, Port Chester, N. Y., and Robert L. Peet, Jr., Stamford, Conn., assignors to Pitney-Bowes, Inc., Stamford, Conn., a corporation of Delaware

Application January 17, 1951, Serial No. 206,496

2 Claims. (Cl. 270—68)

This invention relates to sheet feeding and straightening, and particularly to the straightening of sheets in a sheet folding machine of the buckle chute type.

In the feeding of sheets into position in a buckle chute type sheet folding machine, a sheet may be slightly askew when caught in the nip of the first pair of rollers. When this happens in machines which do not include sheet straightening means, the sheet will remain in an incorrect position throughout the folding operation and accordingly produce improperly located creases and consequent non-alignment of the side edges of the sheet. This is objectionable not only because of its undesirable appearance but also because, as improperly folded, the sheet might not fit in the envelope intended to receive it.

It is an object of the present invention therefore to provide a buckle chute type of folding machine having coacting sheet feeding rollers in which means are provided for effecting sheet straightening whenever the sheet is received or fed askew by the first pair of coacting feeding rollers.

It is another object of the invention to provide for straightening of the sheet while the same is still in contact with the first pair of coacting sheet feeding rollers.

A feature of the invention is the provision in a buckle chute folder of straightening means comprising a sheet arresting abutment together with a controllable degree of allowable slippage between the sheet and the feed rollers, so that, when one portion of the leading edge of the sheet strikes against its related abutment, the sheet may slip at the point of contact with the rollers until the entire leading edge of the sheet engages its abutment.

Another feature of the invention consists in the provisions of novel control means for regulating the degree of slippage of the roller feed for the sheet with both simplicity and accuracy.

Another feature of the invention is the provision of means in the feed mechanism whereby the urging means for the feed rollers may be changed to take equal effect along the roller lengths in response to a single manual operation.

Another feature of the invention is the provision of means whereby an accurate adjustment of the machine can be effected without depending on the mechanical skill of the operator.

A further feature of the invention is the provision of means for quickly and accurately setting the degree or urging of the coacting feed rollers while the machine is in operation.

It has been found, that the sheet straightening operation can be carried out with extraordinary success if the surfaces of the coacting rollers of the feed roller pair have different friction characteristics. This novel arrangement makes it possible to have a center driven roll with a high friction coefficient surface for operation with a cooperating folding or sheet feeding roller to provide a sufficient driving grip to feed the sheet, and at the same time to permit a predetermined degree of slippage allowance between the feed rollers when the leading edge of the sheet engages the sheet arresting abutment. The allowable slippage characteristic may be arranged to suit any other factors appearing in the problem, such as the speed of operation, the properties of the sheet material used, and the like.

Another feature is found in the provision of a feed roller pair wherein one of the rollers has a high friction coefficient surface and the other a low friction coefficient surface.

A still further feature of the invention is the provision of different feed roller characteristics, in accordance with the foregoing paragraph, in combination with quick adjusting apparatus for the urging means of the coacting rollers on a buckle chute type folding machine whereby a highly reliable straightening of sheets of varying properties may be obtained in response to feeding of the sheets against transversely spaced buckle chute stop surfaces.

Another object of the invention is the provision of a novel method for straightening sheets in a buckle chute folder employing coacting roller feed devices.

Additional features and advantages will hereinafter appear.

For purposes of illustration and explanation, the invention is shown in detail in its preferred form in the accompanying drawings, wherein:

Fig. 1 is a partial elevation of a buckle folder provided with the sheet straightening means of the invention, parts being shown in section and parts being broken away for purposes of clarity.

Figs. 2 and 3 are detail elevational views with parts shown in section, illustrating two different positions of the adjusting apparatus for the roller urging means.

Fig. 4 is a section taken approximately on line 4—4 of Fig. 1.

Fig. 5 is a partial longitudinal section to a larger scale of the device shown in Fig. 1.

Fig. 6 is an enlarged detail elevation of the adjusting apparatus for the roller urging means of Figs. 1 to 4 with additional parts shown in section, and with the parts in the position of Figs. 1 and 4.

Figs. 7 and 8 are top plan views of the device of Fig. 1 illustrating different positions of a sheet as it moves under the control of the straightening means.

The present invention deals mainly with the guiding and controlling of roller fed sheets in a buckle chute type folding machine so as to cause their edges to assume predetermined angles with the roller axes and thus to insure that the subsequent folding operation will form a properly positioned crease, normally perpendicular to the lateral edges of the sheet.

The device as a whole is illustrated in Fig. 1, and includes a frame **10** having side members **11** and **13** (Fig. 7). Mounted between the side members is a supply holder and guide **15** for holding a plurality of sheets S to be folded. A feed mechanism **17** of a known type separates a single sheet S from the top of the supply in the holder **15** and feeds the same forward across the bridging guide plate **19** and into the nip of a pair of higher speed rollers. The separating or starting roller **18** which forms a part of the feed mechanism **17** is preferably a short roller, contacting the sheet near its center line, or is otherwise so configured as to have no effectual control over the alignment of the sheet.

In the device shown in the drawing there are four folder rollers **21**, **23**, **25** and **27**. Roller **21** is the central roller driven by a power source (not shown), and the upper roller **23**, rear roller **25** and bottom roller **27** are urged against the roller **21** by spring pressure. It is between the central roller **21** and upper roller **23** that the sheet is first fed, and this roller pair grips the sheet and feeds it forwardly into a buckle chute **29** until the sheet strikes a series of buckle stops **31** which extend

across the machine and engage the leading edge of the sheet. The stops 31 are adjustable by means of thumb screw 32 to a position such that a crease exactly at right angles to the side edges of the sheet can be obtained when the leading edge of the sheet is parallel to the series of stops. Continued feeding of the sheet by the rollers 21, 23 causes the sheet to buckle, in a known manner, down into the nip of roller pair 21, 25 where it is folded and again fed forward, crease foremost. If no further folding is required the folded sheet S will then be guided between rollers 21 and 27 to be fed out of the folder onto a conveying and stacking belt 33. If a second fold is required, the guiding feature is omitted and the single folded sheet runs into a lower buckle chute 35 and against another buckle stop 36 in the same manner as described above, until it buckles into the nip of rollers 21, 27, whereupon it is creased and fed out onto the belt 33.

For carrying the spring-pressed rollers 23, 25 and 27, the side frames are shown as provided with spaced auxiliary slotted frame members 37—37. The inner end of a slot 39 in each plate 37, slidably and non-rotatably receives a grooved bearing 41 for the trunnion 43 of the upper roller 23. The slot 39 has a pair of inwardly facing stop shoulders 45 which may engage and limit the movement of a slidable spring abutment 47. The midsection of the slot 39 is widened as indicated by reference character 46, to provide for assembly of the slidable members 41 and 47.

Slots 49 and 51 which slidably and non-rotatably carry bearings 53 and 55 for rollers 25 and 27 respectively are shaped somewhat similarly to slot 39 and also carry at their outer ends spring abutments 57 and 59 respectively which rest against shoulders 61—61 and 63—63 respectively. Slots 49 and 51 are also provided with widened midsections as indicated by numerals 60 and 62 respectively, similar to slot 39. Springs 65 are mounted in slots 39 and urge the bearings 41 and the abutments 47 away from each other. Likewise springs 67 and 69 are mounted in slots 49 and 51 respectively to urge their corresponding bearings and spring abutments apart. The spring abutments 57 and 59 carry screws 71 which engage the ends of the corresponding springs and are threadedly mounted in the abutment bodies so as to alter the pressure of the corresponding springs in response to screw rotation.

According to the present invention, each abutment 47 carries an outwardly directed cam follower surface. As shown this surface consists of the head 73 of a screw 75 which is adjustably threaded into the body of its abutment 47. A set screw 77 is provided for securing the adjustment of the screw 75 when a proper setting has been determined. The screw 75 extends within the spring 65 and thus does not normally adjust the spring pressure against the shoulders 45 in the manner of the spring-abutting screws 71.

Extending across the machine and rotatably mounted in the side members 11 and 13 is a control shaft 79 having an operating lever 81. Near the ends of the shaft 79 are rigidly connected identical spring adjusting cams 83, which are located above and in line with the heads 73 of screws 75. Each cam has three peripherally spaced surfaces each a different radial distance from the axis of the shaft. As shown, these surfaces comprise two flats 85 and 87, and a concentric section 89. The flats 85 are nearest the axis of shaft 79, the flats 87 are spaced somewhat farther from the axis, and the concentric section 89 is spaced still farther from the shaft axis. Thus, to meet varying conditions such as papers of different thicknesses and different surfaces, the force which the springs 65 supply can be conveniently adjusted at both sides of the machine by means of the cams 83, which are simultaneously operated by shaft 79 when lever 81 is moved. Figs. 1, 4 and 6 illustrate the position of minimum force wherein the lever 81 is in vertical position and the cam face 85 is towards the screw head 73. A 90° counter-clockwise movement of the shaft 79, to the position of Fig. 2, will present faces 87 to the screw heads and further compress the springs 65 slightly to provide a medium pressure. Clockwise rotation of the shaft 79 to the position of Fig. 3 presents the curved surfaces 89 to the screw heads and compresses the springs 65 still more. The lever 81 is maintained in any one of the foregoing positions against inadvertent or vibration inspired shifting. In the positions of Figs. 1 and 2, the flat surfaces 85 and 87 of the cams keep the heads 73 centralized on the surface, the corners resisting rotation of the cam. In the Fig. 3 position, the lever 81 will bear against a tie-rod or cross bar 91 on the machine, there being sufficient pressure between the screw head 73 and cam surface 89 to keep the parts in the desired position.

In order to provide substantially equal pressure at all points along the rollers 21, 23, the springs 65 are made individually adjustable. It is found that the springs 65, made by normal manufacturing methods, vary about 10% in the force developed. While springs at the opposite limits of a 10% tolerance will both be well within the usable range, their effects must nevertheless be accurately equalized when springs of such different force are used at opposite ends of the same pair of rollers. This compensation is effected by an adjustment of the screws 75, normally conducted at the point where the machine is assembled and tested. For example, if the springs 65 to be installed are of unequal force, the stronger is normally put in place on one side of the machine 10 with the abutment 47 against shoulders 45, which compresses the spring slightly from its free length, and the screw 75 is carefully adjusted so that its head barely touches the cam surface 85 without moving the abutment 47 away from the shoulders 45. In this position no substantial spring pressure is applied to the rollers, but just enough deflection is normally brought about to prevent chattering of the spring. The corresponding set screw 77 is then firmly tightened. At the other side of the machine, the weaker spring is similarly installed and the head 73 of the associated screw 75 is adjusted into contact with the corresponding cam surface 85. This screw 75 is then further adjusted until the abutment 47 leaves the shoulders 45 slightly and compresses the second spring a little more, enough to provide equal pressure between the rollers 21 and 23 clear across the machine as determined by the straight and accurate feeding of test sheets. In this way the adjustments made by the operator using the lever 81 during ordinary machine operation will be accurate and true, and will produce substantially equal pressures all across the machine at the higher pressure settings as well as at the low setting.

Theoretically, in the operation of the machine, a sheet from the supply of sheets S when picked up by the starting roller 18 should be fed into the nip of the rollers 21, 23 with the leading edge parallel to the axes of the rollers at least with the lateral edges at right angles to the axes of the rollers, so that as the sheet advances in the chute 29 both sides of the leading edge will strike the buckling stops at the same instant assuming the latter to have been properly adjusted. However, occasionally, due to improper stacking of the sheets or improper adjustment of the lateral guides 15 or for other reasons, a sheet advanced may be askew, and if this condition prevailed the creases would not be perpendicular to the lateral edges of the sheet and an untidy folded sheet would result. Further, the improperly folded sheet might have greater overall dimensions than the envelope into which it is to be placed.

The present invention is the result of a recognition of this possible faulty operation of the machine and an endeavor to obviate it. The difficulty in solving the problem was that when one side of the leading edge of the sheet engages the buckling stops, the body of the sheet is still between and gripped by the rollers 21, 23 and presumably

can not shift in its own plane so as to straighten out. Releasing the grip of the feed rolls on the paper would not solve the problem, for without the grip the sheet would not be advanced to buckle itself as intended in this type of folder.

After making many attempts to solve this problem, it was discovered that if the sheet is advanced with sufficient speed its momentum will cause it to continue to move after one side of the leading edge of the sheet strikes its adjacent buckling stop and until the other side of the leading edge engages its adjacent buckling stop, whereupon the sheet will buckle downwardly into the nip of the rollers **21**, **25**.

It was further discovered that the speed at which the sheet could be advanced could be kept within practical working limits, in fact, at substantially normal speeds, by introducing into the advancing means, i. e., rollers **21**, **23** in the form of the invention shown, sufficient slippage to permit the sheet to move under the momentum which it has at ordinary speeds of operation. This slippage may be had in several ways. For instance, it may be accomplished by making both rollers with less friction than normal. However, in the form of the invention herein disclosed where the roller **21** cooperates not only with the roller **23** but also with the rollers **25** and **27**, it is desirable to have the rollers **21**, **25** and **27** provided with the same frictional surface. Accordingly, in the form of the invention herein disclosed, the roller **23** is so made as to have the desired degree of friction, i. e., to permit the desired amount of slippage. It was found that by having the drive roller **21** provided with a resilient, high friction coefficient surface, and the other roller **23** provided with a low friction coefficient surface, preferably a highly polished metallic surface, as for instance, a chromium plated metal surface, the desired degree of slippage could be obtained. Under the latter condition, the sheets would feed in the usual manner and at the usual speed but if a sheet approached the buckling stops in a skewed condition, the sheet would shift bodily until its leading edge became aligned with the buckling stops. Buckling of the sheet would then be effected in the usual manner and be gripped in the nip of the rollers **21**, **25**.

Because of the slippage between the sheet and rollers **21**, **23**, and the momentum of the advancing sheet, after one portion has been arrested, the sheet continues its forward movement through the rollers until the entire leading edge thereof engages the buckling stops, which is allowed by reason of the impositiveness of the roller **23**. Stated another way, the leading edge of the sheet is thrown against the buckling stops, and if the entire leading edge does not reach the stops at the instant of initial engagement the sheet will continue its advancing movement by its own momentum until the entire leading edge does engage the buckling stops. In doing so the sheet straightens itself.

It has been found that the device of this invention with the polished metal pressure roller **23** operates successfully when the sheets are given a linear speed of about forty-five inches a second when ordinary calendered paper is being folded. This speed, of course, may be varied depending upon the weight of the sheet. This self-straightening of the sheet traveling at normal speeds does not occur unless a determinable amount of slippage is provided for, and it has been found that this may be accomplished, as stated above, by making one of the rollers of relatively soft rubber and the other roller of hard polished metal. The amount of friction between the rollers **21**, **23** may be varied according to the thickness and smoothness of the paper to be folded, and this, as pointed out above, may be conveniently controlled by adjusting the cams **83** by means of the lever **81**.

Notwithstanding the fact that the sheet may slip, i. e., move relatively to the rollers **21**, **23** in straightening itself, assuming that the pressure on the sheet between the rollers **21** and **23** is properly adjusted, as soon as both sides of the leading edge of the sheet engage the buckling stops, the sheet will buckle in the usual and desired manner on a line substantially perpendicular to the lateral edges of the sheet. Thereupon, the progress of the folding operation will be continued by the rollers **21**, **25** and **27** which all have substantially the same frictional characteristics.

While in order to comply with the statute the invention is described in language which is rather specific as to structural features and arrangements, it is to be understood that the invention is not limited to the specific details shown, but that the means and method herein disclosed comprises the preferred of several modes of putting the invention into effect, and the invention is therefore claimed in any of its forms or modifications within the scope of the language employed in the appended claims.

Having described the invention, what is claimed is:

1. In a buckle chute type folding machine comprising a pair of coacting feed rollers one of which is power driven, means for urging said rollers towards each other, a buckle chute into which a sheet is fed by said rollers, and a buckle stop means including stops positioned to engage the leading edge of a sheet adjacent the side edges thereof as the sheet is advanced in said chute by said rollers to cause buckling towards a folding means: the improvement which comprises a yielding, high friction coefficient surface on the driven roller; and a smooth, low friction coefficient surface on the other roller; and manipulative lever operated means for quickly adjusting the force exerted by said urging means to provide more or less pressure on the sheet between said rolls in equal degree along their lengths, whereby the grip of said rollers on a sheet is light enough to permit laterally progressive degrees of slippage of the sheet between the rollers for self-straightening of the sheet in response to striking of the foremost side of the leading edge against its stop, but is also strong enough to drive the sheet frictionally to buckle the same after the leading edge is in full contact with the stops, and whereby the grip of the rollers on the sheet may be adjusted to accommodate sheets of different properties.

2. In a buckle chute type folding machine comprising a frame, a pair of coacting feed rollers, a buckle chute into which a sheet is fed by said rollers, and a buckle stop against which a sheet in said chute is fed by said rollers to cause buckling towards a folding means: the improvement which comprises supporting means for one of said rollers movably mounted on said frame for movement of said one roller towards and away from the other; at least two springs acting at spaced points on said supporting means near the ends of said one roller for urging the same towards the other roller; and identical cams mounted on said frame, connected for simultaneous movement and arranged to act, each on one of said springs, for producing equal and simultaneous increments of deflection of said springs, one of said rollers having a surface of high friction coefficient material, and the other having a low friction coefficient surface of hard, smooth material.

References Cited in the file of this patent

UNITED STATES PATENTS

1,709,282	Rader	Apr. 16, 1929
1,969,049	Spiess	Aug. 7, 1934
2,058,877	Hitchcock	Oct. 27, 1936
2,191,597	Spiess	Feb. 27, 1940
2,237,472	Brillas	Apr. 8, 1941
2,399,175	Ford	Apr. 30, 1946
2,428,769	Bobst	Oct. 14, 1947
2,503,858	Waterworth	Apr. 11, 1950
2,542,277	Ford	Feb. 20, 1951
2,563,403	Ford et al.	Aug. 7, 1951