2 Sheets—Sheet 1.

E. BUELL.

ROTARY-CHURNS.

No. 193,803. Patented Aug. 7, 1877.

Fig. 1.

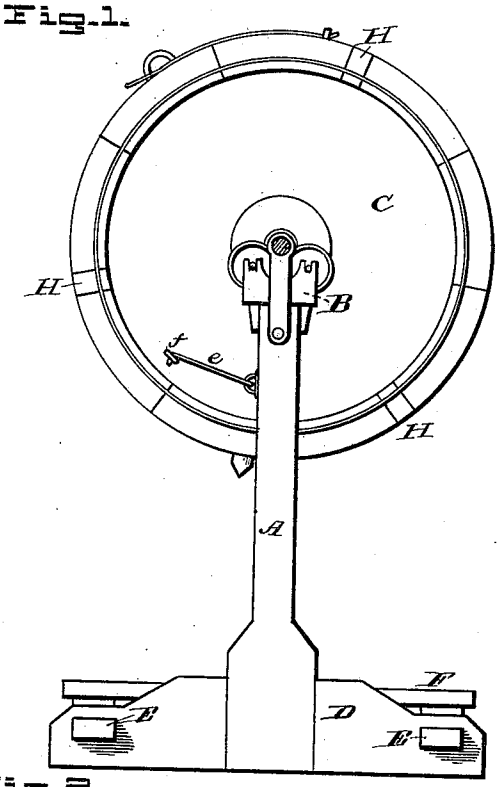

Fig. 2.

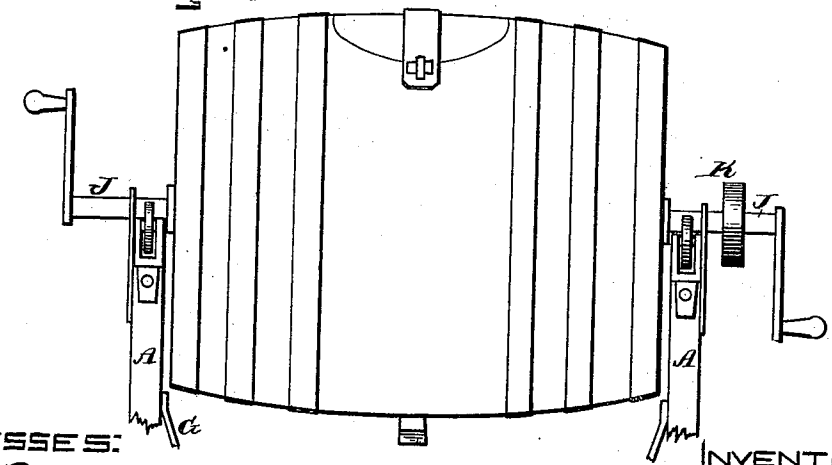

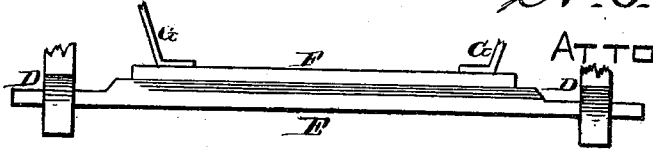

WITNESSES:

N. B. Brown

D. P. Coal

INVENTOR:

Ezra Buell.

PER

A. G. Abbot

ATTORNEY.

N. PETERS, PHOTO-LITHOGRAPHER, WASHINGTON, D. C.

2 Sheets—Sheet 2.

E. BUELL.

ROTARY-CHURNS.

No. 193,803. Patented Aug. 7, 1877.

Fig. 3.

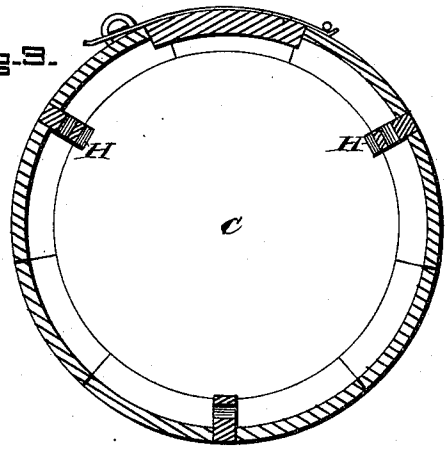

Fig. 4.

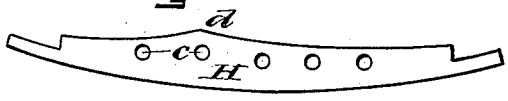

Fig. 5.

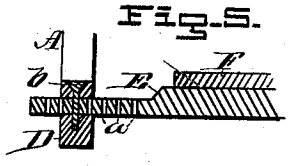

WITNESSES:

H. B. Brown

O. T. Howe

INVENTOR:

Ezra Buell.

PER

H. J. Abbot.

ATTORNEY.

N. PETERS, PHOTO-LITHOGRAPHER, WASHINGTON, D. C.

UNITED STATES PATENT OFFICE.

EZRA BUELL, OF HEUVELTON, NEW YORK.

IMPROVEMENT IN ROTARY CHURNS.

Specification forming part of Letters Patent No. **193,803**, dated August 7, 1877; application filed February 16, 1877.

To all whom it may concern:

Be it known that I, EZRA BUELL, of Heuvelton, in the county of St. Lawrence and State of New York, have invented certain new and useful Improvements in Churns; and I do hereby declare that the following is a full, clear, and exact description thereof, which will enable others skilled in the art to which it appertains to make and use the same.

This invention relates to certain improvements in that class of churns commonly known as "barrel churns;" and the invention consists in the construction of the supporting-frame, whereby it is rendered adjustable, so as to receive barrels or churn-bodies of various lengths.

In the drawings illustrating my invention, Figure 1 is an end elevation of my churn; Fig. 2, a side elevation, part of the frame being broken away; Fig. 3, a central cross-section of the barrel; Fig. 4, a side view of one of the dasher-wings; and Fig. 5, a longitudinal section of one end of one of the cross-bars of the frame, showing its adjusting devices.

A A represent the posts or standards of the churn-frame, supporting, in anti-friction or other suitable bearings B, the churn-barrel or cream-receptacle C. These posts A A rise from side pieces D, which posts and side pieces, with cross-bars E and a platform, F, constitute the frame of the churn, the aforesaid standards or posts being strengthened by braces G connecting them with the platform. Said braces are held in place by screws or other suitable means, so as to admit of their removal at pleasure. The cross-bars E are extra long, and their ends project through mortises in the side pieces D, wherein they are held by screws *b* passing through one of a series of holes, *a*, in the said ends, as shown in Fig. 5.

The object of this construction is twofold, viz., first, by disconnecting the braces G, and adjusting the cross-bars within the mortises, so that the screws *b* shall pass through a given hole, *a*, the width of the frame—that is, the distance apart of the posts A A may be correspondingly increased or diminished, so as to permit the use of barrels of different lengths, as occasion may require; and, secondly, by taking the cross-bars out of the mortises entirely, and removing the braces G, the frame may be compactly arranged for transportation or for storing.

The barrel C is provided with gudgeons J, to either or both of which a cranked handle is affixed for rotating the said barrel, and, if desired, a band-pulley, K, may be secured to one or both of said gudgeons for allowing the application thereto of motive power. In order that the barrel may be held stationary in filling or emptying it, or while working the butter, a hook, *e*, may extend from one of the posts and engage with the staple *f* on the head of the barrel, or other suitable means to this end may be employed.

Between any number of the staves of the barrel, and of equal length therewith, I arrange the dasher-wings H, so as to project into the barrel. (See Figs. 3 and 4.) These wings, of which there may be any number, are constructed with holes *c*, and a prominent projection or double inclined surface, *d*, the angles of inclination of which are different, and one incline shorter than the other, so as to bring the meeting-point nearer one end, and these meeting-points in the several wings are arranged, preferably, at opposite ends of the barrel in alternate wings, so as to cause the cream to roll from one end of the churn to the other, thereby effecting a more thorough and quicker separation of its globules, and to this extent facilitating the formation of butter. The office of the holes *c* will be understood to be to aid in breaking up the cream.

The wings H, it will be understood from the foregoing, constitute the churn-dasher, and by making them of equal length with the staves, though of course of greatly reduced width, they can be put in place as the barrel is being made, and without other fastenings than the barrel-heads and hoops, being arranged between the staves and having their outer surfaces flush with the surfaces of the staves. By this construction no separate fastenings for the wings are required, whereby metallic devices are excluded, with their injurious effects, from the interior of the churn.

I am aware that adjustable frames have been used to support barrel and other churns; also that a frame consisting of an upright and side pieces with cross-bars have been used in

spoke-driving devices, and I do not, therefore, desire to broadly claim such; but I do claim the special arrangement and combination hereinafter specified.

What I claim is—

The post A and side pieces D, adjustably connected together by the platform F, having cross-bars E, all constructed and arranged to support the churn C, substantially in the manner set forth.

In testimony that I claim the foregoing as my own I affix my signature in presence of two witnesses.

EZRA BUELL.

Witnesses:
JAMES A. MACK,
ELIJAH WHITE.