Aug. 9, 1927. 1,638,768

H. K. HITCHCOCK

GLASS SURFACING APPARATUS

Filed April 22, 1925 2 Sheets-Sheet 1

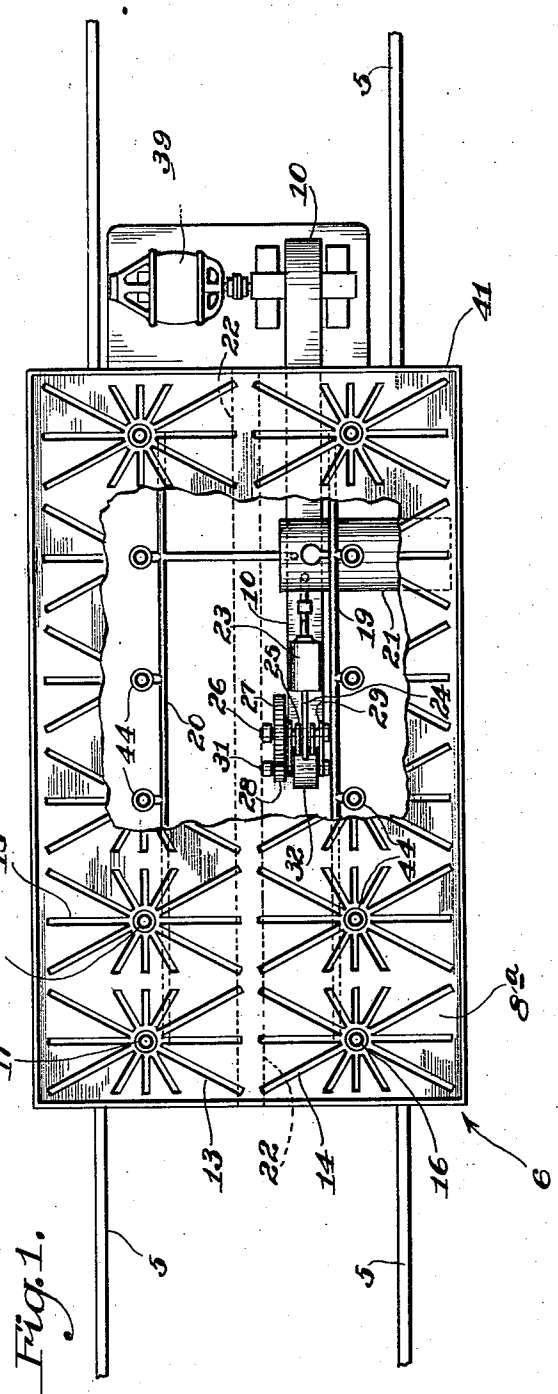

Fig. 1.

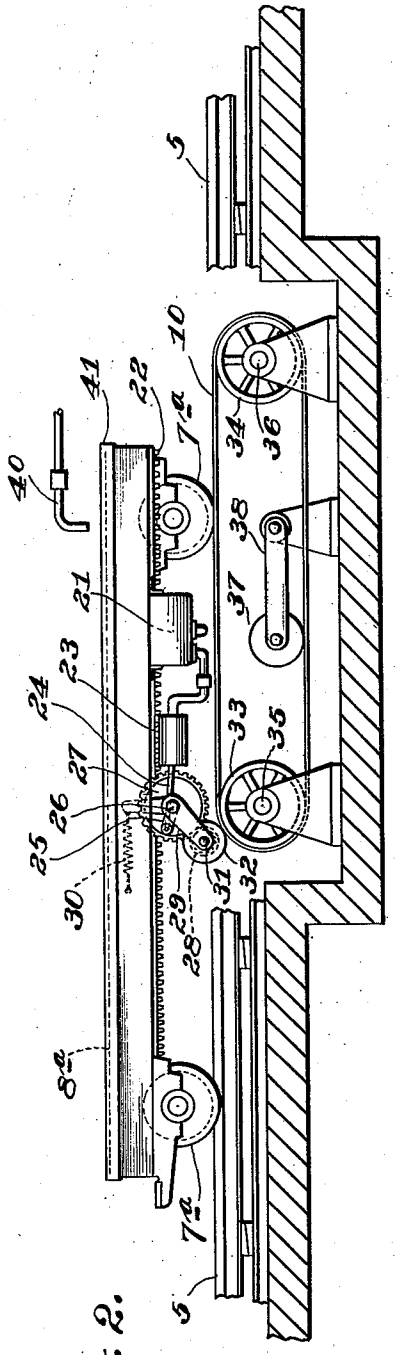

Fig. 2.

INVENTOR

H. K. Hitchcock

by

James B. Bradley

Atty

Aug. 9, 1927.

1,638,768

H. K. HITCHCOCK

GLASS SURFACING APPARATUS

Filed April 22, 1925

2 Sheets-Sheet 2

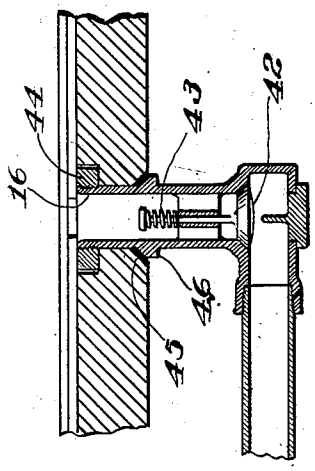

Fig. 3.

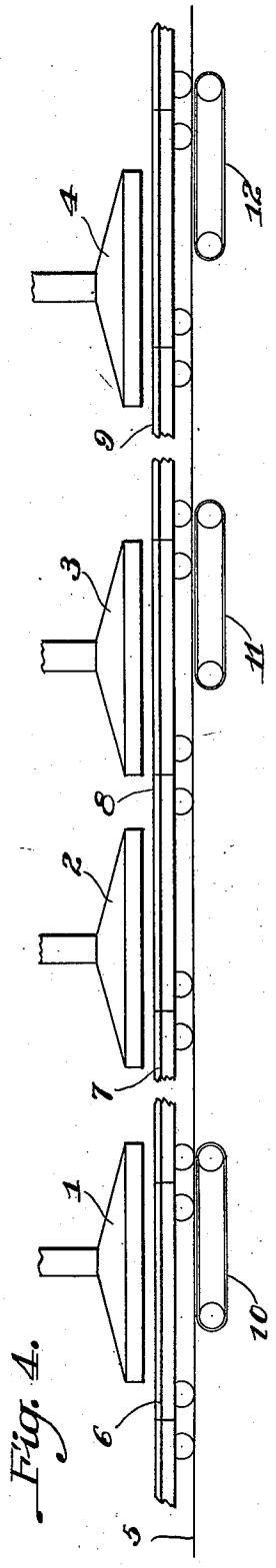

Fig. 4.

INVENTOR

H. K. Hitchcock

by James C. Bradley

atty

Patented Aug. 9, 1927. 1,638,768

UNITED STATES PATENT OFFICE.

HALBERT K. HITCHCOCK, OF PITTSBURGH, PENNSYLVANIA, ASSIGNOR TO PITTSBURGH PLATE GLASS COMPANY, A CORPORATION OF PENNSYLVANIA.

GLASS-SURFACING APPARATUS.

Application filed April 22, 1925. Serial No. 25,006.

The invention relates to glass surfacing apparatus, and more particularly to means for securing the plates or sheets to be surfaced to the cars or tables employed on a straight away grinding and polishing operation. It has for its primary objects; the provision of a practical form of apparatus whereby the necessity of using plaster of Paris for securing the plates to the cars or tables is avoided; the provision of a suction or vacuum apparatus for accomplishing the desired result in which the labor and attention required for looking after the system is reduced to a minimum, by the use of means which render the operation of securing the vacuum and maintaining it largely automatic; and the provision of improved means for insuring constant and effective application of the suction to the glass sheets throughout the surfacing operation. Certain embodiments of the invention are illustrated in the accompanying drawings wherein:

Figure 1 is a plan view of part of the apparatus. Fig. 2 is a side elevation. Fig. 3 is an enlarged detail section and Fig. 4 is a diagrammatic side elevation on a reduced scale.

Referring to Fig. 4, 1, 2, 3, etc. are a series of surfacing runners, either for grinding or polishing, which are suitably driven by means, not shown. Beneath these runners extends the track 5 which carries the surfacing tables or cars 6, 7, 8, 9, etc. and 10, 11, 12, etc. are power driven belts for operating the vacuum pumps carried by each of the tables, as later described.

The tables or cars are similarly constructed and equipped throughout so that a description of one, as illustrated in Figs. 1, 2 and 3, will be sufficient for all. This table 6 is provided with the two sets of wheels 7^a, 7^a, and the body portion is made up of a casting having the flat smooth top 8^a provided with the sets of shallow grooves 13, 14, 15, etc., with the center of each set connected with the upper ends of the suction pipes 16, 17, 18, etc. These vertical pipes are connected with the main longitudinal pipes 19 and 20, which are in turn connected to the vacuum tank 21, and are preferably secured to the lower side of the table. The tables are preferably equipped with racks 22 extending longitudinally thereof and engaged by driven pinions (not shown) for giving the train a continuous movement up to, and beneath the series of grinding and polishing runners.

The tank is exhausted by means of an air pump 23 carried by the underside of the car or table and provided with a plunger and a connecting rod 24 reciprocated from the crank 25. The crank 25 is mounted upon a shaft 26 which also carries the spur gear 27 and this spur gear is driven from a pinion 28. The pinion is carried by a rocker arm 29 pivoted on the shaft 26 and having its upper end drawn yieldingly to the left by means of the powerful spring 30 attached at one end to the car body. The shaft 31 which carries the pinion 28 also carries a pulley 32, and when the car or table arrives at the position indicated in Fig. 2 in its movement to the right, the pulley 32 engages the driving belt 10. This driving belt is located beneath the level of the track as indicated and is carried by the pulleys 33 and 34 mounted upon the shafts 35 and 36. The idler roll 37 mounted upon the arm 38 serves as a take-up device for the belt and automatically keeps it relatively tight. The shaft 36 is driven directly from the electric motor 39 as indicated in Fig. 1. When the pulley 32 engages the belt 10, the pump 23 is operated, thus exhausting the air from the tank 22 and withdrawing air through the pipes 16, 17, 18, etc. leading to the surface of the table.

Before seating the glass upon the table, its surface is flooded with water by means of the supply pipe 40 positioned above the line of travel of the tables. Enough water is supplied to fill the vertical portions 16, 17, 18, etc. of the suction pipes and to cover the top surface of the table with a film of water, this film being retained by means of a flange 41 which projects up above the surface of the table about one-eighth of an inch. The glass is seated on the table just before it arrives at the first belt 10, and when the pump 23 begins to operate, thus exhausting the air from the tank 21, the suction from this tank acting through the main pipes 19 and 20 and the vertical pipes 16, 17, 18, etc. withdraws the water from the vertical pipes and from the surface of the table, such water being carried first down into the tank and then withdrawn through the suction pump 23. The opposing wetted surfaces of the table and the

glass tend to prevent leakage inward from the edge of the table, and if the glass is rough, the top of the table is preferably provided with a rubber sheet cemented thereto, so that a better seal is secured between the glass and the rubber than can be secured between glass and metal under these conditions. The length of the belt 10 is such that by the time the car or table has passed completely over this belt, the suction produced is sufficient to hold the sheet securely to the top of the table and prevent any lateral movement of the glass with respect to the table top during the surfacing operation. In order to take care of leakage which may occur gradually during the grinding and polishing operation, a series of driving belts 10, 11, 12, are employed, as indicated in Fig. 4, arranged at such intervals, and in such numbers as are necessary in order to maintain a proper suction effect upon the glass sheets during the entire grinding and polishing operation.

In order to prevent leakage in the reverse direction through the vertical pipes 16, 17, 18, etc. during the periods in which the cars and tables are intermediate the driving belts 10, 11, 12, etc., the check valves 42 are preferably employed (Fig. 3), such check valves being of any desired construction and being held closed by means of the springs 43. These valves also serve to retain the water in the vertical pipes and upon the surface of the table preliminary to the application of the sheet of glass. The vertical pipes are threaded at their upper ends, as indicated in Fig. 3, and secured in position by means of nuts 44 seated in suitable recesses in the table top. The pipe is made tight with respect to the table top by means of the gaskets 45 lying between the table top and the shoulders 46 carried by the vertical pipes.

What I claim is:

1. The combination with a surfacing car or table mounted for movement along a track and having a glass supporting surface, of a vacuum pump carried by the table, communicating means leading from the top surface of the table to the pump, and driving means for the pump positioned adjacent the path of movement of the table and arranged to actuate the pump while the table is moving past such driving means.

2. The combination with a surfacing car or table mounted for movement along a track and having a glass supporting surface, of a vacuum pump carried by the table, communicating means leading from the top surface of the table to the pump, a drive pulley therefor, and a power driven belt adjacent the path of movement of the table and extending longitudinally thereof, and adapted to engage said pulley and operate the pump while the table is moving past such belt.

3. The combination with a surfacing car or table mounted for movement along a track and having a glass supporting surface, of a vacuum tank carried by the table, a pump for exhausting the air from the tank also carried by the table, communicating means leading from the top surface of the table to the tank, and driving means for the pump positioned adjacent the path of movement of the table and adapted to actuate the pump while the table is moving past such driving means.

4. The combination with a surfacing car or table mounted for movement along a track and having a glass supporting surface, of a vacuum pump carried by the table, communicating means leading from the top surface of the table to the pump, and driving means for the pump comprising a series of power driven units arranged at intervals along the track and each adapted to be brought automatically into driving relation with the pump during the period in which the table is moving past the unit.

5. The combination with a surfacing car or table mounted for movement along a track and having a glass supporting surface, of a vacuum pump carried by the table, communicating means leading from the top surface of the table to the pump, a drive pulley therefor, and a series of power driven belts arranged at intervals along the track and adapted to be brought successively by the movement of the table into driving relation with said pulley to operate the pump during the period in which the table is moving past the belts.

In testimony whereof, I have hereunto subscribed my name this 13th day of April, 1925.

HALBERT K. HITCHCOCK.