(12) INTERNATIONAL APPLICATION PUBLISHED UNDER THE PATENT COOPERATION TREATY (PCT)

(19) World Intellectual Property Organization
International Bureau

(43) International Publication Date
06 June 2024 (06.06.2024)

WIPO | PCT

(10) International Publication Number
WO 2024/115292 A1

(51) International Patent Classification:
E21B 7/02 (2006.01) *E21B 19/08* (2006.01)
E21D 20/00 (2006.01)

(21) International Application Number:
PCT/EP2023/082939

(22) International Filing Date:
24 November 2023 (24.11.2023)

(25) Filing Language: English

(26) Publication Language: English

(30) Priority Data:
22210804.5 01 December 2022 (01.12.2022) EP

(71) Applicant: **SANDVIK MINING AND CONSTRUCTION OY** [FI/FI]; Pihtisulunkatu 9, 33330 Tampere (FI).

(72) Inventors: **SIMILÄ, Jukka**; Sandvik Mining and Construction Oy, PL 100, 33311 Tampere (FI). **KOPRA, Riku**; Sandvik Mining and Construction Oy, PL 100, 33311 Tampere (FI). **HELKALA, Jarno**; Sandvik Mining and Construction Oy, PL 100, 33311 Tampere (FI). **RUOTSALAINEN, Pasi**; Sandvik Mining and Construction Oy, PL 100, 33311 Tampere (FI). **SILLANPÄÄ, Vesa**; Sandvik Mining and Construction Oy, PL 100, 33311 Tampere (FI). **NURMIKOLU, Heidi**; Sandvik Mining and Construction Oy, PL 100, 33311 Tampere (FI).

(74) Agent: **SANDVIK**; Sandvik Mining and Construction Oy, 33311 Tampere (FI).

(81) Designated States *(unless otherwise indicated, for every kind of national protection available)*: AE, AG, AL, AM, AO, AT, AU, AZ, BA, BB, BG, BH, BN, BR, BW, BY, BZ, CA, CH, CL, CN, CO, CR, CU, CV, CZ, DE, DJ, DK, DM, DO, DZ, EC, EE, EG, ES, FI, GB, GD, GE, GH, GM, GT, HN, HR, HU, ID, IL, IN, IQ, IR, IS, IT, JM, JO, JP, KE, KG, KH, KN, KP, KR, KW, KZ, LA, LC, LK, LR, LS, LU, LY, MA, MD, MG, MK, MN, MU, MW, MX, MY, MZ, NA, NG, NI, NO, NZ, OM, PA, PE, PG, PH, PL, PT, QA, RO, RS, RU, RW, SA, SC, SD, SE, SG, SK, SL, ST, SV, SY, TH, TJ, TM, TN, TR, TT, TZ, UA, UG, US, UZ, VC, VN, WS, ZA, ZM, ZW.

(84) Designated States *(unless otherwise indicated, for every kind of regional protection available)*: ARIPO (BW, CV, GH, GM, KE, LR, LS, MW, MZ, NA, RW, SC, SD, SL, ST, SZ, TZ, UG, ZM, ZW), Eurasian (AM, AZ, BY, KG, KZ, RU, TJ, TM), European (AL, AT, BE, BG, CH, CY, CZ, DE, DK, EE, ES, FI, FR, GB, GR, HR, HU, IE, IS, IT, LT, LU, LV, MC, ME, MK, MT, NL, NO, PL, PT, RO, RS, SE,

(54) Title: BOLTING HEAD, BOLTING RIG AND METHOD

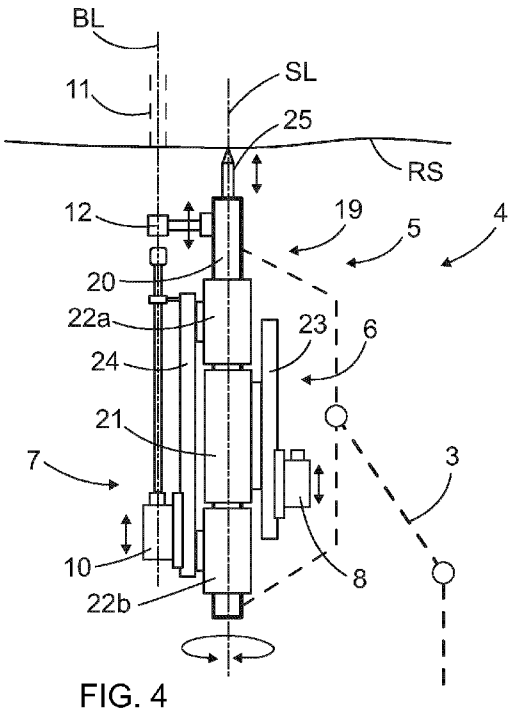

FIG. 4

(57) Abstract: A bolting head, bolting rig, and method of reinforcing a rock surface. The bolting head (4) comprises a frame (5), a bolting unit (6) provided with a bolt driver (8), and a rock drilling unit (7). The bolting head further comprises a holding device (12) with movable gripping elements (29) for gripping and holding drilling and bolting tools. At least one indexing actuator (16) is arranged to index the bolting unit and the rock drilling unit in relation to the holding device.

WO 2024/115292 A1

[Continued on next page]

SI, SK, SM, TR), OAPI (BF, BJ, CF, CG, CI, CM, GA, GN, GQ, GW, KM, ML, MR, NE, SN, TD, TG).

Published:

— *with international search report (Art. 21(3))*

Bolting head, bolting rig and method

Background of the invention

The invention relates to a bolting head for mounting rock reinforcing bolts to a rock surface. The bolting head comprises a bolting unit and a rock drilling unit which can be indexed.

The invention further relates to a bolting rig and to a method for reinforcing rock surfaces with rock bolts.

The field of the invention is defined more specifically in the preambles of the independent claims.

In mines, construction sites and at other work areas exists a need to reinforce rock surfaces and to thereby ensure their safety and suitability for the intended purposes. A common method for rock reinforcement is rock bolting. In such reinforcement system several rock bolts are installed into drilled holes. In this way rock layers are bonded together so that the risk for collapse is reduced. There are different kind of bolting heads for drilling the drill holes and installing the rock bolts. However, the present solutions have shown to contain some disadvantages.

Brief description of the invention

An object of the invention is to provide a novel and improved bolting head and bolting rig for mounting rock reinforcing bolts to a rock surface. The invention further relates to a novel and improved method for reinforcing a rock surface.

The bolting head according to the invention is characterized by the characterizing features of the first independent apparatus claim.

The bolting rig according to the invention is characterized by the characterizing features of the second independent apparatus claim.

The method according to the invention is characterized by the charactering features and steps of an independent method claim.

An idea of the disclosed solution is that a bolting head comprises a frame, a bolting unit provided with a bolt driver, and a rock drilling unit comprising a rock drilling machine. The bolting head further comprises a holding device provided with movable gripping elements for gripping and holding drilling and bolting tools. At least one indexing actuator is arranged to index the bolting unit and the rock drilling unit in relation to the holding device.

In other words, the holding device is not indexed but the bolting unit and the drilling unit are i.e., the holding device is non-indexed.

According to an embodiment, the frame is connectable to a boom of a bolting rig. Then the bolting head can be positioned by means of the boom to the positions defined in a bolting plan. The frame can be supported directly against the rock surface being reinforced, or alternatively, there may be separate means for providing proper support for the bolting head during the bolting measures.

According to an embodiment, the bolting head comprises dedicated feed beams for the rock drilling unit and the bolting unit. The bolting unit comprises a second feed beam for supporting axial movement of the bolt driver.

According to an embodiment, the bolting unit is designed for mounting at least one of the following rock bolt types: grout rock bolts, self-drilling rock bolts, friction type rock bolts, anchored rock bolts, cable bolts and extension bolts. Thus, the disclosed solution can be implemented in a versatile manner for different rock reinforcing solutions.

According to an embodiment, the holding device can be utilized when gripping to components of extension drilling rods as well as components of extension bolts.

According to an embodiment, the bolting head may comprise an injection unit for feeding cement, resin, or any other bulk type grouting material. Further, the injec-

tion unit may be designed to feed grouting material cartridges. The injection unit can also be indexed to the bolting line.

According to an embodiment, the bolting head may comprise at least one magazine for storing rock bolts, bolting tools and drilling tools and components belonging to them.

According to an embodiment, the bolting head comprises a bolting line passing through a center of gripping elements of the holding device. The indexing actuator is configured to position the bolting unit and the drilling unit on the bolting line by means of the indexing feature. In other words, the holding device is kept on the bolting line for the duration of the entire bolting operation whereas the drilling unit and the bolting unit are turned in relation to the bolting line.

According to an embodiment, the holding device is supported to the frame rigidly. In other words, the holding device is without any turning joints and indexing means. The rigid support does not exclude possibility to move the holding device axially.

According to an embodiment, axial position of the holding device is adjustable on a bolting axis passing through a center between the gripping elements. In other words, the holding device is axially movable in relation to the drilling unit and the bolting unit. An advantage of this solution is that position of the holding device can be matched accurately to axial positions of the drilling and bolting tools ensuring thereby proper grip and avoiding possible damages to the tools and components.

According to an alternative solution, the holding device is arranged immovably in relation to the frame. Then the holding device is without the axial adjusting or zooming feature.

According to an alternative solution, the frame comprises a support element which is axially movable and is

supportable against the rock surface being reinforced. In other words, the support element can be part of the basic frame structure and can be moved independently in relation the basic frame structure.

According to an embodiment, the support element is an integrated part of the frame.

According to an embodiment, the support element comprises a spike or other element configured to be forced against the rock surface being operated.

According to an embodiment, the support element comprises at least one actuator for generating needed axial forces for the axial movement. The support element can be moved in a controlled manner by means of the actuator. Fast positioning movements of the bolting head can be done by means of the boom and accurate slower movements can be executed by means of the actuator of the support element.

According to an embodiment, the support element comprises an elongated tubular body and the drilling unit and the bolting unit are both supported to the body and are turnable relative to longitudinal axis of the body.

According to an embodiment, between the tubular body of the support element and the drilling unit and the bolting unit are hinges, coupling sleeves surrounding the body, or other coupling and bearing means for allowing the turning movements required in the indexing measures.

According to an embodiment, the holding device is supported non-rotationally to a body of the support element.

According to an embodiment, there may be a separate support bar or element for preventing rotating movement of the holding device. This way it can be ensured that the holding devices is kept on the bolting line.

According to an embodiment, the support element comprises at least one hydraulic cylinder.

According to an embodiment, the support element comprises a first hydraulic cylinder and a second hydraulic

cylinder arranged axially one after another. The first hydraulic cylinder is configured to move the support element against the rock surface. The second hydraulic cylinder is configured to provide the holding device with axial movement.

According to an embodiment, the second hydraulic cylinder is configured to provide the holding device a zooming feature.

According to an embodiment, the first and second hydraulic cylinders are integrated to be one single actuator.

According to an embodiment, the second hydraulic cylinder can be extended and retracted independently of the first hydraulic cylinder.

According to an embodiment, the holding device is supported to the frame by means of a support which is slanted in relation to the bolting line and away from the rock surface to be bolted. In other words, the gripping elements of the holding device are operating perpendicularly to the bolting line, but the supporting structure of the holding device is inclined backwards i.e., away from a bolting line. An advantage of the embodiment is that positioning of the bolting head is facilitated when operating rock surfaces provided with pits and other surface irregularities.

According to an embodiment, angle of the slope of the orientation of the support structure of the holding device may be for example 15 - 30 degrees relative to a perpendicular of the bolting line.

According to an embodiment, the solution relates also to a bolting rig for reinforcing rock surfaces. The bolting rig comprises a movable carrier, at least one boom; and at least one bolting head mounted to the boom. Further, the bolting head is in accordance with the features disclosed in this document.

According to an embodiment, the solution relates also to a method of reinforcing a rock surface by means of

a bolting rig provided with a bolting head. The method comprises: drilling a drill hole to the rock surface by means of a rock drilling unit; indexing the rock drilling unit away from a bolting line and replacing it with a bolting unit; feeding a rock bolt to the drill hole by means of a bolt driver of the bolting unit; and assisting the drilling and bolting measures by means of a holding device provided with gripping elements. The method further comprises keeping the holding device continuously on the bolting line during the drilling and bolting and indexing the drilling unit and the bolting unit in relation to the bolting line.

The above disclosed embodiments may be combined to form suitable solutions having those of the above features that are needed.

Brief description of the figures

Some embodiments are described in more detail in the accompanying drawings, in which

Figure 1 is a schematic side view of a bolting rig,

Figure 2 is a schematic diagram of a bolting head and its basic devices and features,

Figure 3 is a schematic diagram of another bolting head,

Figure 4 is a schematic side view of a bolting head mounting upward directed rock bolts,

Figure 5 is a schematic side view showing a front end portion of a bolting head;

Figure 6 is a schematic view showing movable gripping elements of a holding device,

Figure 7 is a schematic side view of a support element comprising two consecutively arranged hydraulic cylinders, and

Figure 8 is a schematic diagram showing some items which can be gripped by a holding device.

For the sake of clarity, the figures show some embodiments of the disclosed solution in a simplified manner.

In the figures, like reference numerals identify like elements.

Detailed description of some embodiments

Figure 1 discloses a bolting rig 1 comprising a movable carrier 2 and one or more booms 3 mounted on the carrier 2. A bolting head 4 is mounted to a distal end portion of the boom 3. The bolting head 4 comprises a frame 5, a bolting unit 6 and a rock drilling unit 7. The bolting unit 6 comprises a bolt driver 8 for mounting rock bolts 9, and the rock drilling unit 7 comprises a rock drilling machine 10 for drilling drill holes 11 wherein the rock bolts 9 can be fed. The bolting unit 6 and the rock drilling unit 7 can be indexed relative to the frame 5 so that they can be selectively positioned on a bolting line. A holding device 12, or retainer, is supported on a front part of the frame 5 and comprises gripping elements for gripping and holding tools and components needed in the drilling and bolting measures. When the bolting unit 6 and the rock drilling unit 7 are indexed the holding device 12 remains on the bolting line. A feed hose 13 or channel may be arranged between the bolting unit 6 and a feed unit 14 which is located on the carrier 2. Grouting and other injection materials can then be fed to the bolting unit 6 and further to the drilled hole 11 together with the rock bolt 9.

Figure 1 further discloses that operation of the bolting head 4 may be controlled under control of a control unit CU. The control unit CU may be provided with a bolting plan 15 wherein needed pre-designed parameters for the bolting are defined. The rock bolts 9 may be mounted in a fan shape bolting pattern, or alternatively, any other desired pattern or setting may be implemented.

Although Figure 1 discloses the rock bolting rig 1 in an underground mine or gallery, the disclosed solution can also be implemented for reinforcing any other rock surfaces in mines and work sites.

Figure 2 discloses that a bolting head 4 comprises a holding device 12 supported on a frame 5. A bolting line BL is passing through the holding unit 12. A drilling unit 7 or a bolting unit 6 can be moved one at a time on the bolting line BL by means of indexing means 15 comprising at least one indexing actuator 16 generating required moving forces. In Figure 2 the bolting head comprises two indexable units 6, 7 whereas in Figure 3 there are two additional indexable units: an injection unit 17 and a magazine 18.

In Figure 2 the bolting head is supported against a rock surface RS by means of a support element 19 having fixed length whereas in Figure 3 the support element 19 is provided with an extension mechanism or zoom.

Figure 4 discloses a bolting head 4 positioned by means of a boom 3 close to a rock surface RS. A frame 5 of the bolting head 4 comprises a support element 19 having an elongated tubular body 20 and a bolting unit 6 and a drilling unit 7 are both supported to the body 20 and are turnable relative to longitudinal axis of the body 20. There may be sleeve-like parts 21 and 22a, 22b for connecting the bolting unit 6 and the drilling unit 7 in a turnable manner to the body 20. Then the bolting unit 6 and the drilling unit 7 can be turned to a bolting line BL by means of an indexing actuator, which is not shown in Figure 4 for clarity reasons. The indexing actuator may be a hydraulic cylinder or motor, for example. A bolt driver 8 may be supported movably on a first feed beam 23 and a rock drilling machine 10 may be supported movably on a second feed beam 24. Further, a holding device 12 is mounted to a front end part of the body 20. The holding device 12 retains its position on the bolting line BL while the bolting unit 6 and the drilling unit 7 change their positions during the operation. In connection with the holding device 12 may or may not be moving means for moving it axially on the bolting line as it is indicated by means of an arrow. Further, there may be a spike 25 or corresponding protrusion at an extension of the body 20 and

the spike 25 may be movable in longitudinal direction as an arrow indicates. Then final supporting movement of the bolting head 4 against the rock surface RS can be executed by means of the zoomable spike 25. The support element 19 may comprise a hydraulic cylinder or any other suitable linear actuator for generating the movement. A support line SL passes along the longitudinal axis of the support element 19 and the indexing movement occurs in relation to the support line SL.

Figure 5 discloses a front part of a bolting head 4 and differs from the one shown in Figure 4 in that a holding device 12 is supported to a frame 5 by means of a support 26 which is slanted away from the rock surface SF to be bolted. A line 27 indicates the slanting directed backwards in relation to a bolting direction B. The rock surface RS may comprise pits 28 and other shapes, and then, the slanted support 26 facilitates positioning of the bolting head 4 and prevents collisions against edges of the pit 28.

Figure 6 discloses a holding device 12 comprising two movable gripping elements 29 for gripping and holding elements 30, such as drilling and bolting tools. The gripping elements 29 may be jaws and they can be moved by means of one or more actuators, such as hydraulic cylinders. However, any other suitable moving mechanisms and type of actuators are possible.

Figure 7 discloses a bolting head 4 comprising a support element 19 which is provided with two hydraulic cylinders. A first hydraulic cylinder 31 and a second hydraulic cylinder 32 are arranged axially one after another on a support line SL. The first hydraulic cylinder 31 is configured to move a spike 25 axially on the support line SL, and the second hydraulic cylinder 32 is configured to move a holding device 12 axially on a bolting line BL. The bolting head 4 comprises a bolting unit and a drilling unit, but in Figure 7 only the drilling unit 7 is shown. The bolting unit may be orientated 90°, or any other suitable

angle, relative to the drilling unit 7, for example, and is therefore not shown in Figure 7. However, the bolting unit and the drilling unit 7 connected on an outer surface of a sleeve 33 which is turnable in relation to the support line SL, and which also serves as a body for the second hydraulic cylinder 32. In other words, the sleeve 33 can turn in relation to a cradle 34 supported to boom 3. The first hydraulic cylinder 31 is supported to the cradle 34 non-rotationally by means of a device 35 so that axial movement is allowed. The device 35 may be a hydraulic cylinder or other retractable and extendable element. Thereby, zooming of the holding device 12 is possible.

The first hydraulic cylinder 31 comprises a first piston 36 separating a first working pressure space 37 and a second working pressure space 38. A first working pressure surface A1 of the first piston 36 is facing towards the first working pressures space 37, and a second working pressure surface A2 is facing towards the second working pressure space 38. The first working pressure surface A1 is greater than the second working pressure surface A2. A first pressure channel P1 is connected to the first working pressure space 37 and a second pressure channel P2 is connected to the second working pressure space 38.

The second hydraulic cylinder 32 comprises a second piston 39 separating a third working pressure space 40 and a fourth working pressure space 41. A third working pressure surface A3 of the second piston 39 is facing towards the third working pressures space 40, and a fourth working pressure surface A4 is facing towards the fourth working pressure space 41. The third working pressure surface A3 is greater than the fourth working pressure surface A4. A third pressure channel P3 is connected to the third working pressure space 40 and a fourth pressure channel P4 is connected to the fourth working pressure space 41.

Axial forces generated in the first and second hydraulic cylinder 31, 32 depend on magnitudes of pressures

p1 – p4 fed to the working pressure spaces 37, 38, 40, 41 and differences on pressure areas a1 – a4 of pressure surfaces A1 – A4 on opposite sides of the first and second piston 36, 39.

The holding device 12 can be moved forwards towards the rock surface RS when force F3 (p3*a3) is greater than force F1 (p1*a1), and Force 2 (p2*a2) is less than force F3 (p3*a3) while force F4 (p4*a4) is less than force F3 (p3*a3). As mentioned above, the acronyms p1 – p4 relate to pressures in the pressure channels P1 – P4, acronyms a1 – a4 relate to sizes of the pressure surfaces A1 – A4, and the generated forces F1 – F4 are products of p*a. Movement of the holding device 12 in backward direction i.e., away from the rock surface RS can be achieved when pressure differences prevailing in the working pressure spaces 37, 38, 40, 41 are the other way around. When fluid flows in the pressure channels P1 – P4 is prevented, for example by means of valves, then no movement occurs in the hydraulic cylinders 31, 32. Further, the force F1 determines support force holding the bolting head 4 against the rock surface RS.

Thus, Figure 7 discloses that the support element 19 comprises two integrated hydraulic cylinders 31 and 32 ant that pressure difference control is implemented in their control.

Figure 8 discloses items that can be gripped by means of a holding device. The holding device can be utilized for handling different rock drilling components and for handling different rock bolting tools and components.

The drawings and the related description are only intended to illustrate the idea of the invention. In its details, the invention may vary within the scope of the claims.

Claims

1. A bolting head (4) for mounting rock reinforcing bolts (9) to a rock surface (RS),

wherein the bolting head (4) comprises:

a frame (5);

a bolting unit (6) comprising a bolt driver (8);

a rock drilling unit (7) comprising a feed beam and a rock drilling machine (10) supported movably on the feed beam;

a holding device (12) comprising at least two movable gripping elements (29) for gripping and holding drilling and bolting tools; and

at least one indexing actuator (16) for indexing the bolting unit (6) and the rock drilling unit (7);

characterized in that

the at least one indexing actuator (16) is configured to index the bolting unit (6) and the rock drilling unit (7) in relation to the holding device (12); and

the bolting head (4) comprises a bolting line (BL) passing through a center of gripping elements (29) of the holding device (12) and the at least one indexing actuator (16) is configured to position the bolting unit (6) and the drilling unit (7) on the bolting line (BL) by means of the indexing feature.

2. The bolting head as claimed in claim 1, characterized in that

the holding device (12) is supported to the frame (5) rigidly.

3. The bolting head as claimed in any one of the preceding claims 1 or 2, characterized in that

axial position of the holding device (12) is adjustable on a bolting line (BL) passing through a center between the gripping elements (29).

4. The bolting head as claimed in any one of the preceding claims 1 to 3, characterized in that

the frame (5) comprises a support element (19) which is axially movable and is supportable against the rock surface (RS) being reinforced.

5. The bolting head as claimed in claim 4, characterized in that

the support element (19) comprises an elongated tubular body and the drilling unit (7) and the bolting unit (6) are both supported to the body and are turnable relative to longitudinal axis of the body.

6. The bolting head as claimed in claim 4 or 5, characterized in that

the holding device (12) is supported non-rotationally to a body of the support element (19).

7. The bolting head as claimed in any one of the preceding claims 4 - 6, characterized in that

the support element (19) comprises at least one hydraulic cylinder.

8. The bolting head as claimed in claim 7, characterized in that

the support element (19) comprises a first hydraulic cylinder and a second hydraulic cylinder arranged axially one after another;

the first hydraulic cylinder is configured to move the support element (19) against the rock surface (RS); and

the second hydraulic cylinder is configured to provide the holding device (12) with axial movement.

9. The bolting head as claimed in any one of the preceding claims 1 - 8, characterized in that

the holding device (12) is supported to the frame (5) by means of a slanted support (26) which is inclined in relation to a bolting line (BL).

10. A bolting rig (1) for reinforcing rock surfaces (RS),

wherein the bolting rig (1) comprises:

a movable carrier (2);

at least one boom (3);

at least one bolting head (4) mounted to the at least one boom (3);

characterized in that

the bolting head (4) is in accordance with any one of the preceding claims 1 – 9.

11. A method of reinforcing a rock surface (RS) by means of a bolting rig (1) provided with a bolting head (4),

wherein the method comprises:

drilling a drill hole (11) to the rock surface (RS) by means of a rock drilling unit (7);

indexing the rock drilling unit (7) away from a bolting line (BL) and replacing it with a bolting unit (6);

feeding a rock bolt (9) to the drill hole (11) by means of a bolt driver (8) of the bolting unit (6); and

assisting the drilling and bolting measures by means of a holding device (12) provided with gripping elements (29);

characterized by

keeping the holding device (12) continuously on the bolting line (BL) during the drilling and bolting and indexing the drilling unit (7) and the bolting unit (6) in relation to the bolting line (BL).

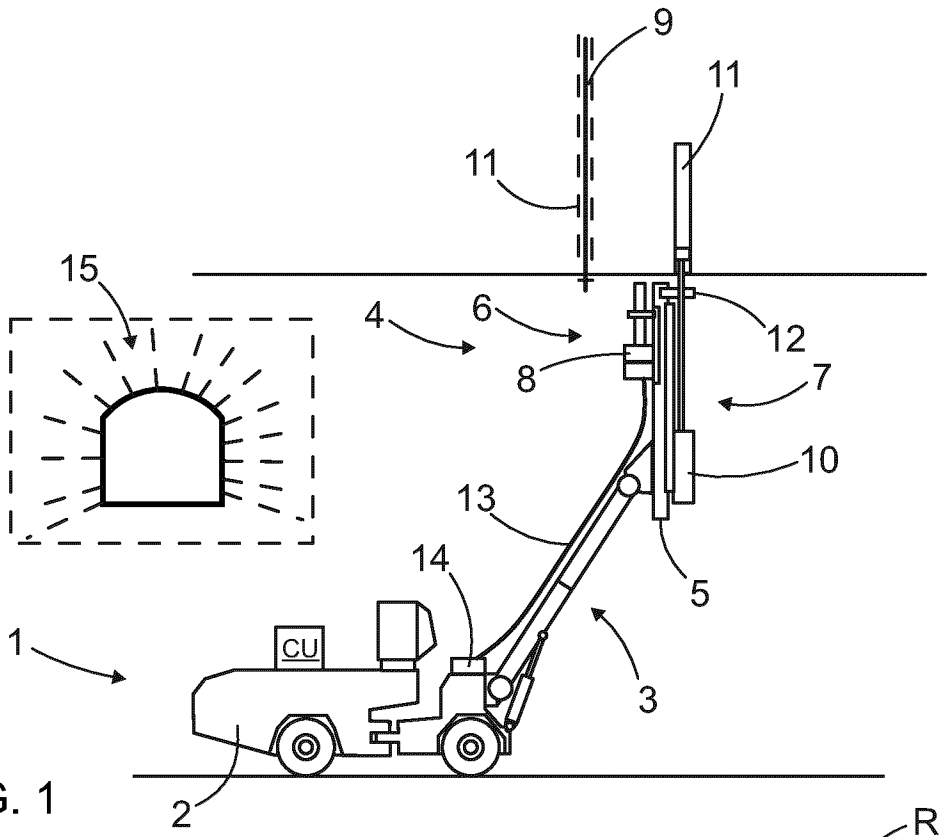

FIG. 1

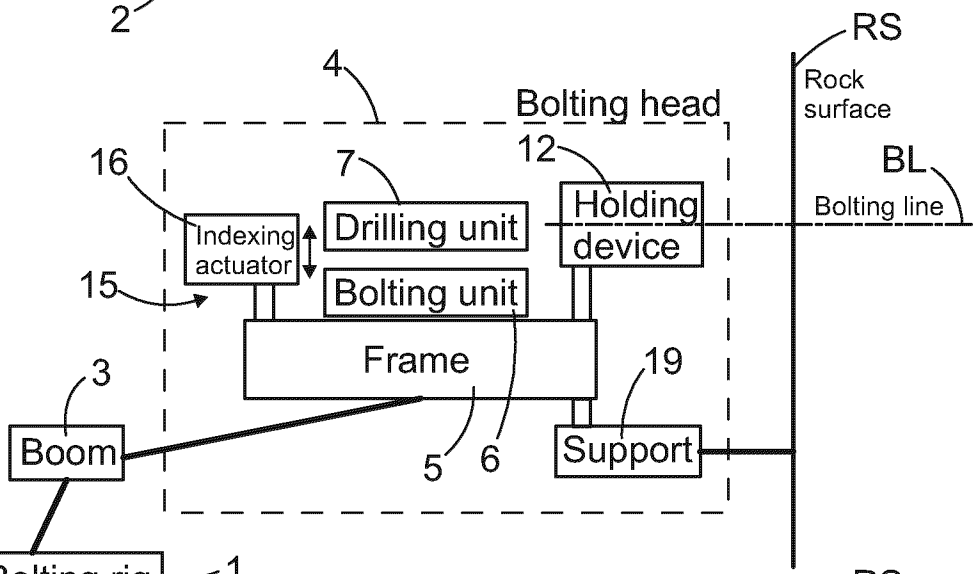

FIG. 2

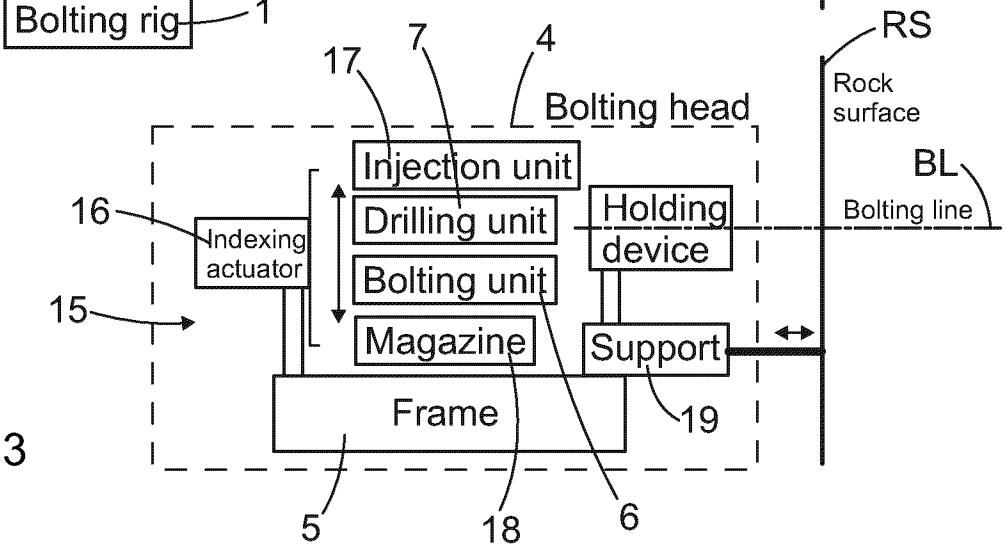

FIG. 3

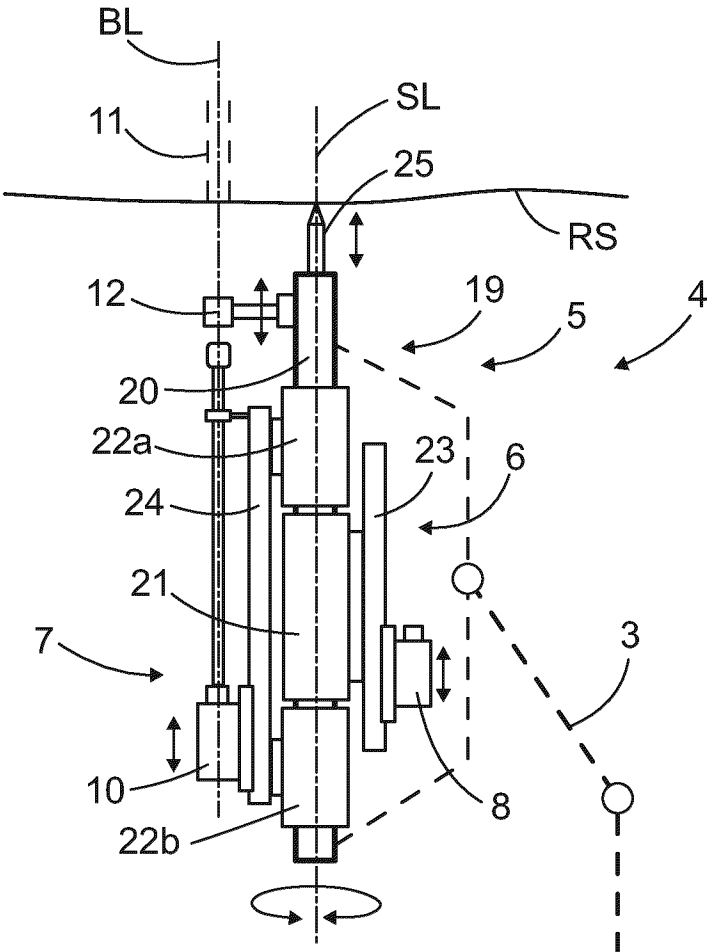

FIG. 4

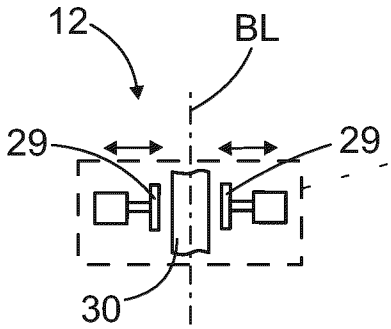

FIG. 6

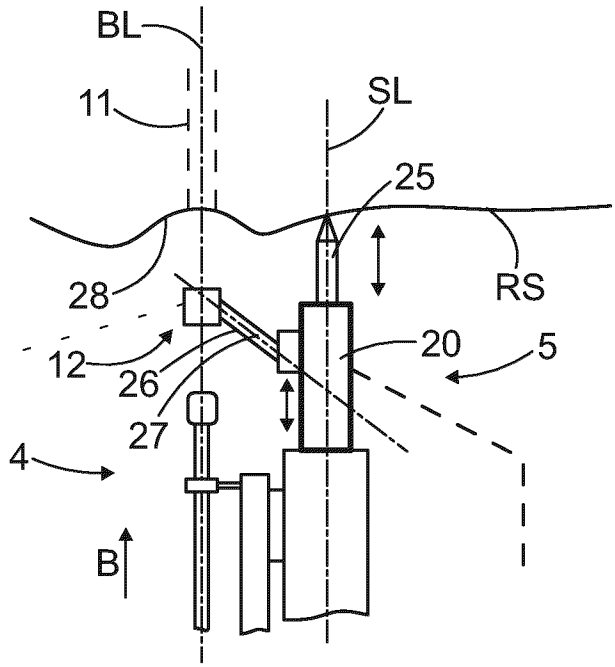

FIG. 5

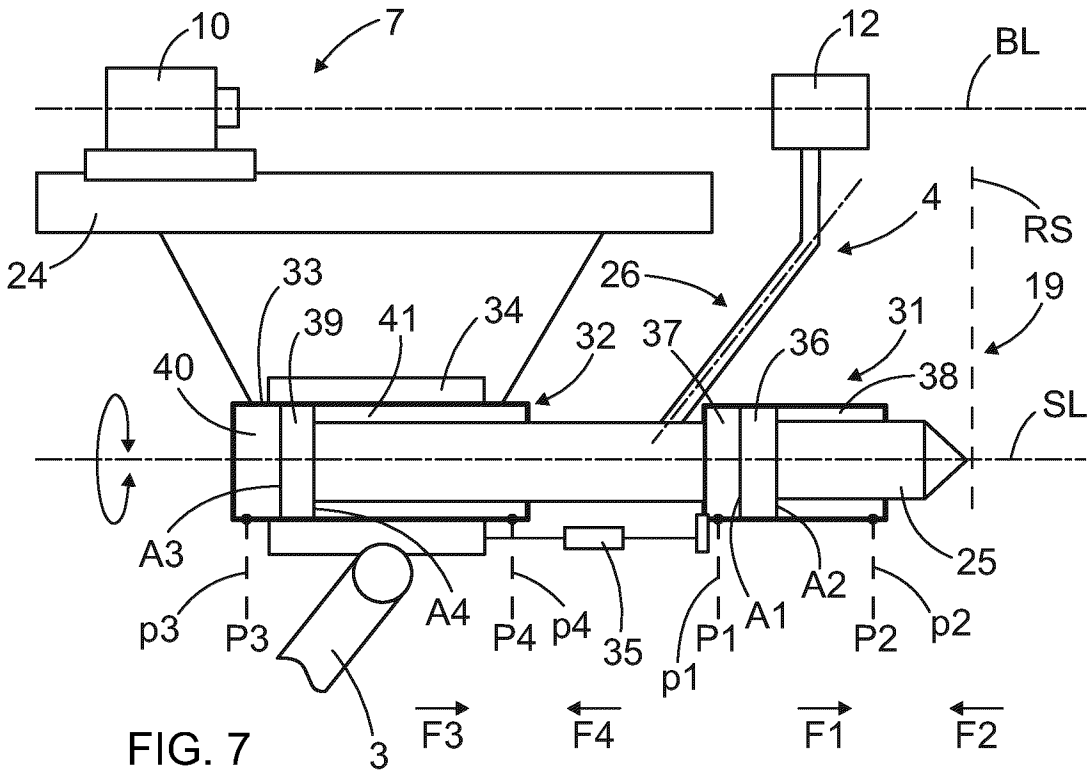
10
7
12
BL
4
RS
24
33
26
19
39
41
34
32
37
36
31
40
38
SL
A3
25
p3
P3
A4
P4
p4
35
P1
A1
A2
P2
p2
p1
3
F3
F4
F1
F2

FIG. 7

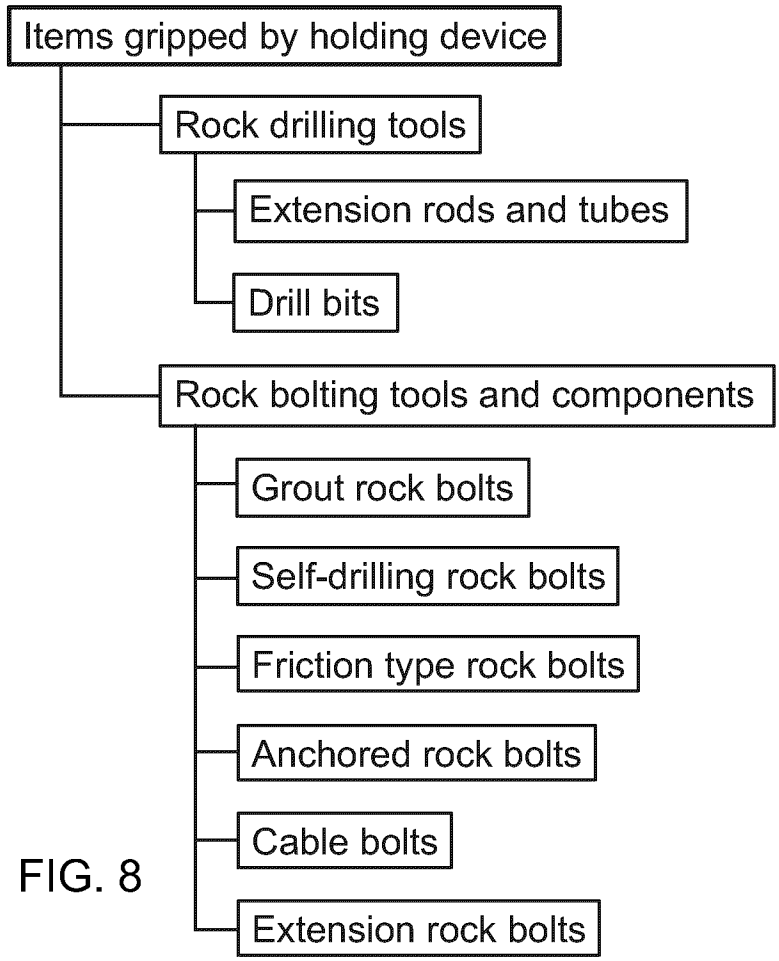
Items gripped by holding device
Rock drilling tools
Extension rods and tubes
Drill bits
Rock bolting tools and components
Grout rock bolts
Self-drilling rock bolts
Friction type rock bolts
Anchored rock bolts
Cable bolts
Extension rock bolts

FIG. 8

INTERNATIONAL SEARCH REPORT

International application No
PCT/EP2023/082939

A. CLASSIFICATION OF SUBJECT MATTER
INV. E21B7/02 E21D20/00 E21B19/08
ADD.

According to International Patent Classification (IPC) or to both national classification and IPC

B. FIELDS SEARCHED

Minimum documentation searched (classification system followed by classification symbols)
E21B E21D

Documentation searched other than minimum documentation to the extent that such documents are included in the fields searched

Electronic data base consulted during the international search (name of data base and, where practicable, search terms used)
EPO-Internal, WPI Data

C. DOCUMENTS CONSIDERED TO BE RELEVANT

Category*	Citation of document, with indication, where appropriate, of the relevant passages	Relevant to claim No.
X	US 4 229 124 A (FREY G ROBERT ET AL) 21 October 1980 (1980-10-21) column 4, lines 54-64; figures 3-5 the whole document	11
A	WO 2010/029220 A1 (SANDVIK MINING & CONSTR OY [FI]; LAHDELMA ILKKA [FI]) 18 March 2010 (2010-03-18) paragraphs [0023] - [0025]; figure 2 the whole document figures 1-3,6	1,9,11
A	CA 2 792 592 A1 (NELSON YVES [CA]) 22 April 2014 (2014-04-22) paragraphs [0070] - [0074]; figures 16-18 the whole document	1

-/--

[x] Further documents are listed in the continuation of Box C.

[x] See patent family annex.

* Special categories of cited documents :

"A" document defining the general state of the art which is not considered to be of particular relevance

"E" earlier application or patent but published on or after the international filing date

"L" document which may throw doubts on priority claim(s) or which is cited to establish the publication date of another citation or other special reason (as specified)

"O" document referring to an oral disclosure, use, exhibition or other means

"P" document published prior to the international filing date but later than the priority date claimed

"T" later document published after the international filing date or priority date and not in conflict with the application but cited to understand the principle or theory underlying the invention

"X" document of particular relevance;; the claimed invention cannot be considered novel or cannot be considered to involve an inventive step when the document is taken alone

"Y" document of particular relevance;; the claimed invention cannot be considered to involve an inventive step when the document is combined with one or more other such documents, such combination being obvious to a person skilled in the art

"&" document member of the same patent family

Date of the actual completion of the international search	Date of mailing of the international search report
9 January 2024	17/01/2024

Name and mailing address of the ISA/	Authorized officer
European Patent Office, P.B. 5818 Patentlaan 2 NL - 2280 HV Rijswijk Tel. (+31-70) 340-2040, Fax: (+31-70) 340-3016	van Berlo, André

2

Form PCT/ISA/210 (second sheet) (April 2005)

C(Continuation). DOCUMENTS CONSIDERED TO BE RELEVANT

Category*	Citation of document, with indication, where appropriate, of the relevant passages	Relevant to claim No.
A	Sandvik Mining And Rock Solutions: "Sandvik DT923i automated i-series tunneling jumbo ¦ Sandvik Mining and Rock Solutions", , 14 April 2021 (2021-04-14), XP093040021, Retrieved from the Internet: URL:https://www.youtube.com/watch?v=eo0LfBtyRBI&ab_channel=SandvikMiningandRockSolutions [retrieved on 2023-04-18] the whole document 48 sec - 1:05 min	1,11
A	CN 112 112 564 A (LANGFANG JINGLONG HEAVY EQUIPMENT CO LTD) 22 December 2020 (2020-12-22) figures 1-3,10	1,11
A	US 2016/305243 A1 (NELSON YVES [CA]) 20 October 2016 (2016-10-20) the whole document	1

INTERNATIONAL SEARCH REPORT

Information on patent family members

International application No
PCT/EP2023/082939

Patent document cited in search report	Publication date	Patent family member(s)	Publication date
US 4229124 A	21-10-1980	AU 526517 B2	13-01-1983
		US 4229124 A	21-10-1980
		ZA 8014 B	26-11-1980
WO 2010029220 A1	18-03-2010	AU 2009290782 A1	18-03-2010
		CA 2734387 A1	18-03-2010
		CN 102149899 A	10-08-2011
		EP 2324199 A1	25-05-2011
		FI 20085864 A	16-03-2010
		JP 5396477 B2	22-01-2014
		JP 2012503114 A	02-02-2012
		WO 2010029220 A1	18-03-2010
		ZA 201102797 B	28-12-2011
CA 2792592 A1	22-04-2014	CA 2792592 A1	22-04-2014
		CA 2876594 A1	22-04-2014
CN 112112564 A	22-12-2020	NONE	
US 2016305243 A1	20-10-2016	CA 2888184 A1	16-10-2016
		US 2016305243 A1	20-10-2016