FORM P8
(To be lodged in duplicate)

REPUBLIC OF SOUTH AFRICA
PATENTS ACT, 1978

PUBLICATION PARTICULARS AND ABSTRACT

[Section 32 (3) (a) - Regulations 22 (1) (g) and 31]

OFFICIAL APPLICATION NO	LODGING DATE	ACCEPTANCE DATE
21 2005/08807	22 31 Oct 2005	43 13 - 09 - 2006

INTERNATIONAL CLASSIFICATION
51 C12M

Not for publication
Classified by:

FULL NAME(S) OF APPLICANT(S)

71 **PROPHYTA BIOLOGISCHER PFLANZENSCHUTZ GMBH**

FULL NAME(S) OF INVENTOR(S)

72 **LÜTH, Peter**

TITLE OF INVENTION

54 **SOLID-STATE FERMENTER**

EARLIEST PRIORITY CLAIMED	COUNTRY	NUMBER	DATE
NB - Use International abbreviation for country (See Schedule 4)	33 DE	31 103 35 522.7	32 31 Jul 2003

57	Abstract (not more than 150 words) and figure of the drawings to which the abstract refers, are attached.	Number of sheets	23

(12) NACH DEM VERTRAG ÜBER DIE INTERNATIONALE ZUSAMMENARBEIT AUF DEM GEBIET DES PATENTWESENS (PCT) VERÖFFENTLICHTE INTERNATIONALE ANMELDUNG

(19) Weltorganisation für geistiges Eigentum
Internationales Büro

(43) Internationales Veröffentlichungsdatum
10. Februar 2005 (10.02.2005)

PCT

(10) Internationale Veröffentlichungsnummer
WO 2005/012478 A1

(51) Internationale Patentklassifikation[7]: C12M 1/02, 1/14, 1/16

(21) Internationales Aktenzeichen: PCT/DE2004/001558

(22) Internationales Anmeldedatum:
17. Juli 2004 (17.07.2004)

(25) Einreichungssprache: Deutsch

(26) Veröffentlichungssprache: Deutsch

(30) Angaben zur Priorität:
103 35 522.7 31. Juli 2003 (31.07.2003) DE

(71) Anmelder *(für alle Bestimmungsstaaten mit Ausnahme von US)*: **PROPHYTA BIOLOGISCHER PFLANZENSCHUTZ GMBH BIOLOGISCHER PFLANZENSCHUTZ GMBH** [DE/DE]; Inselstrasse 12, 23999 Malchow/Poel (DE).

(72) Erfinder; und
(75) Erfinder/Anmelder *(nur für US)*: **LÜTH, Peter** [DE/DE]; Fischkaten 48, 23970 Wismar (DE).

(74) Anwalt: **BAUMBACH, F.**; Robert-Rössle-Str. 10, 13125 Berlin (DE).

(81) **Bestimmungsstaaten** *(soweit nicht anders angegeben, für jede verfügbare nationale Schutzrechtsart)*: AE, AG, AL, AM, AT, AU, AZ, BA, BB, BG, BR, BW, BY, BZ, CA, CH, CN, CO, CR, CU, CZ, DK, DM, DZ, EC, EE, EG, ES, FI, GB, GD, GE, GH, GM, HR, HU, ID, IL, IN, IS, JP, KE, KG, KP, KR, KZ, LC, LK, LR, LS, LT, LU, LV, MA, MD, MG, MK, MN, MW, MX, MZ, NA, NI, NO, NZ, OM, PG, PH, PL, PT, RO, RU, SC, SD, SE, SG, SK, SL, SY, TJ, TM, TN, TR, TT, TZ, UA, UG, US, UZ, VC, VN, YU, ZA, ZM, ZW.

(84) **Bestimmungsstaaten** *(soweit nicht anders angegeben, für jede verfügbare regionale Schutzrechtsart)*: ARIPO (BW, GH, GM, KE, LS, MW, MZ, NA, SD, SL, SZ, TZ, UG, ZM, ZW), eurasisches (AM, AZ, BY, KG, KZ, MD, RU, TJ, TM), europäisches (AT, BE, BG, CH, CY, CZ, DE, DK, EE, ES, FI, FR, GB, GR, HU, IE, IT, LU, MC, NL, PL, PT, RO, SE, SI, SK, TR), OAPI (BF, BJ, CF, CG, CI, CM, GA, GN, GQ, GW, ML, MR, NE, SN, TD, TG).

Veröffentlicht:
— *mit internationalem Recherchenbericht*
— *vor Ablauf der für Änderungen der Ansprüche geltenden Frist; Veröffentlichung wird wiederholt, falls Änderungen eintreffen*

Zur Erklärung der Zweibuchstaben-Codes und der anderen Abkürzungen wird auf die Erklärungen ("Guidance Notes on Codes and Abbreviations") am Anfang jeder regulären Ausgabe der PCT-Gazette verwiesen.

(54) Title: SOLID-STATE FERMENTER

(54) Bezeichnung: SOLID-STATE-FERMENTER

(57) **Abstract:** The invention relates to a solid-state fermenter, for the cultivation of micro-organisms on solid substrates, in particular, for large volumes. The above finds application in the microbiological industry. Said solid-state fermenter comprises one or more air- and water-permeable fermenter stages, arranged one over the other and connected to the wall of the container such that neither air nor water can flow past laterally. A culture substrate is arranged on the fermenter stages for the microorganisms for cultivation, characterised in that cooling of the fermenting material is achieved by means of cooling lances (3), extending perpendicularly from the fermenter base and running through the fermenter stages (4) and a seal (6) is installed between the fermenter stages (4), pressed against the inner wall of the fermenter by the mass of the next fermenter stage (4) up.

(57) **Zusammenfassung:** Die Erfindung betrifft einen Solid-State-Fermenter zur Kultivierung von Mikroorganismen an festen Substraten, insbesondere für große Volumina. Anwendungsgebiet der Erfindung ist die mikrobiologische Industrie. Der erfindungsgemäße Solid-State-Fermenter besteht aus einem oder mehreren luft- und wasserdurchlässigen, übereinander angeordneten Fermenteretagen, die so mit der Wandung des Behälters verbunden sind, daß weder Luft noch Wasser seitlich vorbeiströmen kann, wobei sich auf den Fermenteretagen ein Kultursubstrat für die zu kultivierenden Mikroorganismen befindet, und ist dadurch gekennzeichnet, dass - die Kühlung des Fermenterguts durch senkrecht vom Fermenterboden ausgehende und durch die Fermenteretagen (4) führende Kühllanzen (3) realisiert wird und - eine Dichtung (6) zwischen den Fermenteretagen (4) installiert wird, die durch die Masse der jeweils oben liegenden Etage (4) gegen die Innenwand des Fermenters gepresst wird.

WO 2005/012478 A1

Solid-state fermenter

The invention relates to a solid-state fermenter for the cultivation of micro-organisms on solid substrates, in particular for large volumes. The field of application of the invention is the microbiological industry.

WO 99/57239 has already manifested a solid-state fermenter comprising at least two fermenter levels permeable to air and water and arranged above one another, which are connected with the walls of the container in such a way that neither air nor water can flow past on the side, there being a culture substrate on the fermenter levels for the micro-organisms to be cultivated and a cooling device being fitted under each level.

In use, this fermenter manifests a number of disadvantages.

1. The use of a cooling system in the form of cooling spirals for each individual fermenter level, which run below the levels and each have to be provided with a flow of coolant and with a coolant discharge from the outside through the fermenter wall, results in a high risk of contamination of the fermenter material with the coolant used for cooling. This risk of contamination is in particular to be put down to the fact that each cooling spiral must be connected with the coolant feed and discharge tubes outside the fermenter with the help of 2 connectors (for feed and discharge of the coolant). Leaks can come about on these connectors. The risk of the occurrence of said leaks increases as the number of fermenter levels increases. As a result of the connection pieces of the cooling system protruding into the fermenter from the outside (one feed and one discharge per fermenter level), the insertion of the fermenter levels thereunder is connected with difficulties. In insertion, they must either be held at an angle or have been provided with a recess in order to be lowered past the connections and into the lower part of the fermenter.

2. A further problem with the solid state fermenter described under WO 99/57239 is that the fermenter levels are placed on "rings or otherwise shaped devices" (Claim 4). These "rings or otherwise shaped devices" are provided with a heat-stable gasket.

This is to prevent water or air flowing past the fermenter levels. However, these "rings or otherwise shaped devices" have the effect that the insertion of the level underneath them is connected with difficulties.

Therefore, a need exists to eliminate the said disadvantages of the solid-state fermenter claimed in WO 99/57239 by constructive alterations and enabling the use of large volumes.

This need is fulfilled according to the invention described below. The essential features of the invention area

- a new kind of cooling of the fermenter material and
- a new kind of sealing of the fermenter levels to the fermenter wall.

1. Cooling of the fermenter material

The cooling of the fermenter material is assured by cooling lances (Fig. 1/3) rising vertically from the base of the fermenter. The distance of the cooling lances is based on the quantity of heat produced by the cultivated micro-organisms. The cooling lances are fitted in a triangular arrangement to one another (Fig. 2) with the result that each cooling lance manifests the same distance from the closest one. The cooling lances comprise an interior tube with a lower diameter, which is used for the return of the coolant, and a tube with a larger diameter, in which the first one is arranged centrally, which is used for the feeding of the coolant (Fig. 3). In the cross-section, the cooling lances display an annulus. The tube is provided with a circular cone shaped stopper at the upper end. Preferably, the interior tube ends open 1 - 2 cm in front of the stopper of the outer tube. The cooling lances have an outer diameter of preferably 1 – 3 cm. The ratio of the diameters of the two tubes to one another should preferably be designed in such a way that the flow velocity of the coolant in feeding is equal to the flow velocity of the coolant in the return.

As shown in Fig. 1, the cooling lances are connected underneath the lowest fermenter level with 2 tubes penetrating into the fermenter, one used for the feed and the other used for the return of the coolant. In this way, the outer wall of the fermenter,

which is designed as a pressure vessel, need only be broken through at 2 places for the purpose of the cooling of the fermenter material.

The bases of the fermenter levels have been provided with holes. The holes have a diameter which is approx. 1 mm larger than the outer diameter of the cooling lances. They can be provided with lids which open in an upward direction, i.e. into the culture substrate. When fermenter levels are inserted into the fermenter from above, these lids are opened by the cooling lances and thus open the path for the same. Thanks to the circular cone shaped tip, the cooling lances can penetrate the culture substrate in the insertion of the fermenter levels into the fermenter without problems. As a result of the volume occupied by the cooling lances, a fermenter level may only be filled with culture substrate before insertion into the fermenter to such an extent that there is sufficient space in the fermenter level following insertion into the fermenter.

However, the filling of the fermenter levels can also be done after the level in question has been inserted into the fermenter in such a way that the level is just underneath the fermenter opening and the cooling lances have penetrated the base of the fermenter up to the intended height of the culture substrate. In this kind of filling, no lids are necessary to stop the holes in the fermenter levels. The levels are up to the intended height and inserted into the fermenter until they have contact to the fermenter base underneath.

In a special case, the described fermenter can be operated with only one level filled with the culture substrate. This is in particular possible if the granular culture substrate manifests a very stable structure and there is no risk that the culture substrate compresses during the sterilisation or the fermentation or alters its features in a different way to the detriment of the culture process.

2. Sealing of the fermenter levels to the fermenter wall

For the fermentation or culture of an aerobic micro-organism, a continuous feed of oxygen to the culture substrate on which the micro-organism develops is necessary. Therefore, air is guided through the culture substrate according to the invention claimed under WO 99/57239. However, this is only possible if the fermenter levels

are sealed towards the walls of the fermenter. Otherwise, the air would flow past the levels due to the lower resistance and the culture substrate would not be sufficiently supplied with oxygen. A sealing of the fermenter levels towards the walls of the fermenter is additionally necessary for the inoculation of the fermenter. The inoculation is done according to the invention claimed under WO 99/57239 by the fermenter being banked to above the top fermenter level with sterile water. The inoculum, which distributes in the water, is then inserted via a hole in the lid. An even inoculation of all the fermenter levels is subsequently reached by the water being discharged from the fermenter again through a discharge in the base. In this way, there is an even flow through all the fermenter levels and simultaneous contamination with the inoculum. However, this is only possible if the water does not flow past the fermenter levels at the side.

The air-proof and waterproof seal is achieved in the invention by a seal which is installed between the fermenter levels and is pressed together by the mass of the level positioned above it (Figs. 1/6 and 1/6a). The seal comprises an elastic, heat-stable material (e.g. silicone). When the seal is pushed together, it expands to the side and is pressed against the inner wall of the fermenter. This then ensures the necessary air-proof and waterproof lock. In order to prevent the seal from being pressed together too strongly, the upper fermenter level is positioned on the one underneath it. This can be achieved, for example, by spacers (Fig. 1/6a), which result in the space for the seal pressed together being equal between all the levels. The seal can be installed either on the top edge of the lower level or on the edge below the base of the upper level, e.g. with the help of a groove.

Merely the lowest fermenter level, which is mainly used to accommodate a moistening medium, is positioned on a ring, which is firmly installed on the fermenter wall (Fig. 1) and on which a seal is positioned.

List of reference signs

Fig. 1

1 Fermenter wall
2 Fermenter lid
3 Cooling lance
4 Fermenter level
5 Substrate for culture of micro-organisms
6 Seal between the fermenter levels
6a Relieved seal
7 Lid seal
8 Lid screw connection
9 Vapour inlet
10 Sterile water filter
11 Water inlet
12 Discharge
13 Sterile air filter
14 Air inlet
15 Coolant return
16 Coolant feed
17 Inoculation opening
18 Sterile exhaust air filter
19 Air discharge
20 Safety valve

Fig. 2

a) Front view
b) Top view
1 Fermenter level wall
2 Seal
3 Openings for the cooling lances
4 Level bases, comprising perforated sheet

Fig. 3

1 Internal tube

2 External tube

3 Feed

4 Return

The claims which follow are to be considered as an integral part of the present disclosure. Reference numbers (directed to the drawings) shown in the claims serve to facilitate the correlation of integers of the claims with illustrated features of the preferred embodiment(s), but are not intended to restrict in any way the language of the claims to what is shown in the drawings, unless the contrary is clearly apparent from the context.

"Comprises/comprising" when used in this specification is taken to specify the presence of stated features, integers, steps or components but does not preclude the presence or addition of one or more other features, integers, steps or components or groups thereof.

Patent claims

1. Solid-state fermenter comprising one or more fermenter levels permeable to air and water arranged above one another connected with the walls of the container in such a way that neither air nor water can flow past laterally, with a culture substrate to be found on the fermenter levels for the micro-organisms to be cultivated,
   wherein
   - the cooling of the fermenter material is achieved by cooling lances (3) rising from the fermenter base and leading through the fermenter levels (4) and
   - a seal (6) is installed between the fermenter levels, the seal being pressed against the inner wall of the fermenter by the mass of the level (4) above it.

2. Solid-state fermenter according to Claim 1, wherein the cooling lances (3) are positioned in a triangular arrangement to one another and each cooling lance manifests the same distance form the closest one.

3. Solid-state fermenter according to Claim 1 or 2, wherein the cooling lances (3) comprise an internal tube with a lower diameter, which is used for the return of the coolant, and a tube with a larger diameter, in which the first one is arranged centrally and which is used for the feed of the coolant.

4. Solid-state fermenter according to any one of Claims 1 to 3, wherein the outer tube has been provided with a circular cone shaped stopper at the upper end.

5. Solid-state fermenter according to Claim 4, wherein the inner tube ends open 1-2 cm in front of the stopper of the outer tube.

6. Solid-state fermenter according to any one of Claims 1 to 5, wherein the cooling lances preferably manifest an outer diameter of 1 – 3 cm.

7. Solid-state fermenter according to any one of Claims 1 to 6, wherein the ratio of the diameters of the two tubes to one another is designed in such a way

that the flow velocity of the coolant in feeding is equal to the flow velocity of the coolant in the return.

8. Solid-state fermenter according to Claim 1, wherein the seal comprises an elastic, heat-resistant material which is pressed against the inner wall of the fermenter by the mass of the level above it (4).

9. Solid-state fermenter according to Claims 1 or 8, wherein the seal comprises silicone.

10. Solid-state fermenter according to any one of Claims 1, 8 and 9, wherein spacers (6a) have been arranged between the levels (4).

11. Solid-state fermenter according to any one of Claims 1 and 8 to 10, wherein the seal is installed either on the upper edge of the lower level (4) or on the edge below the base of the upper level (4), e.g. with the help of a groove.

12. Solid-state fermenter according to any one of Claims 1 and 8 to 11, wherein the bottom fermenter level (4), which is mainly used to accommodate a moistening medium, is positioned on a ring firmly installed in the fermenter wall, the ring being positioned on a seal.

13. Solid-state fermenter including any new and inventive integer or combination of integers, substantially as herein described.

14. Solid-state fermenter according to the invention, as hereinbefore generally described.

15. Solid-state fermenter as specifically described with reference to or as illustrated in the accompanying drawings.

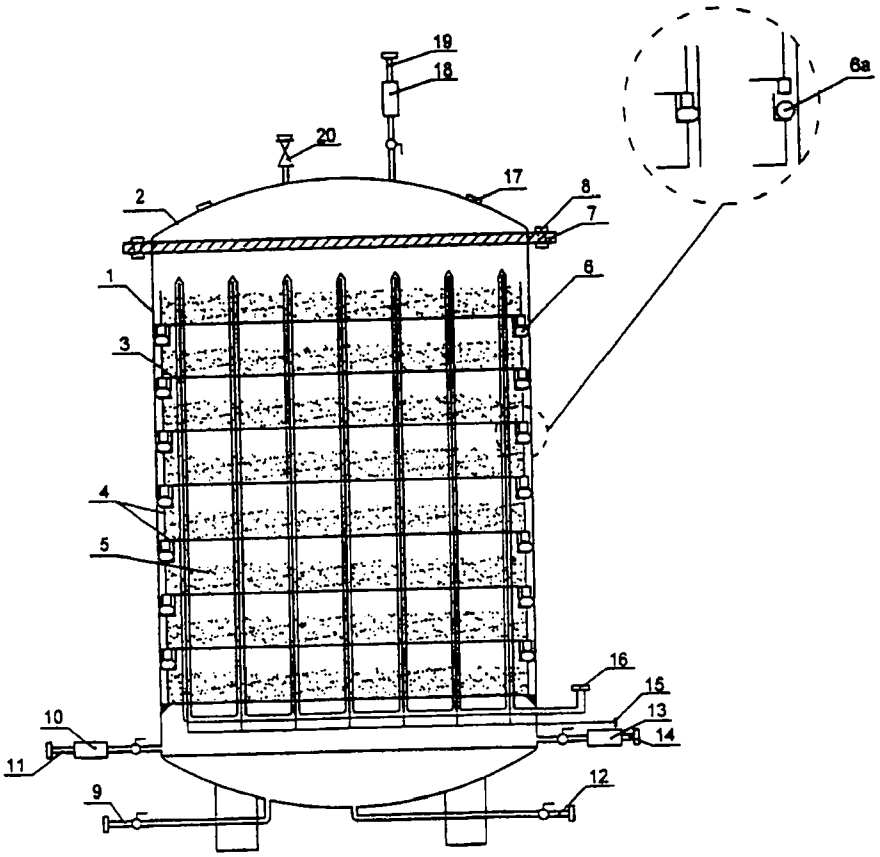

Abb. 1: Prinzipskizze von dem Solid-State-Fermenter

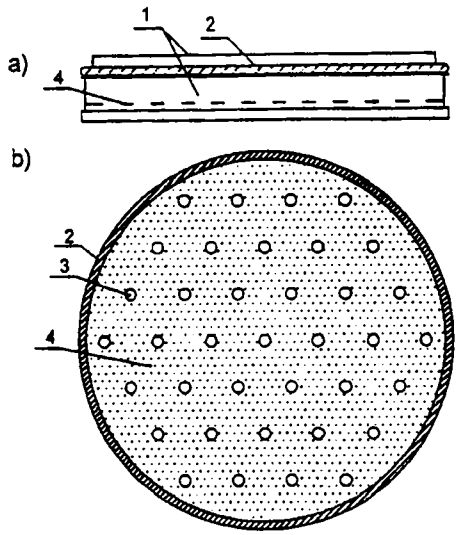

Abb. 2: Fermenteretage

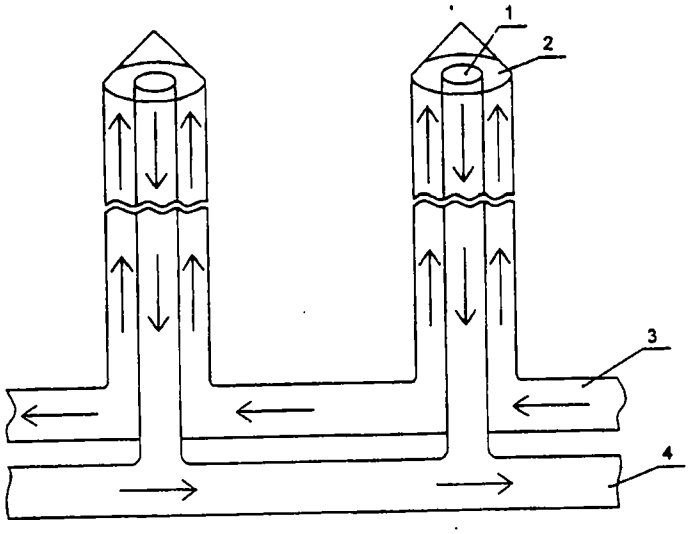

Abb. 3: Kühllanzen mit Kühlmittelvor- und Kühlmittelrücklauf