W. W. BYTHINER.

LOCKING DEVICE FOR TELEPHONE RECEIVERS.

APPLICATION FILED NOV. 11, 1912.

1,068,627.

Patented July 29, 1913.

3 SHEETS—SHEET 1.

FIG. 1.

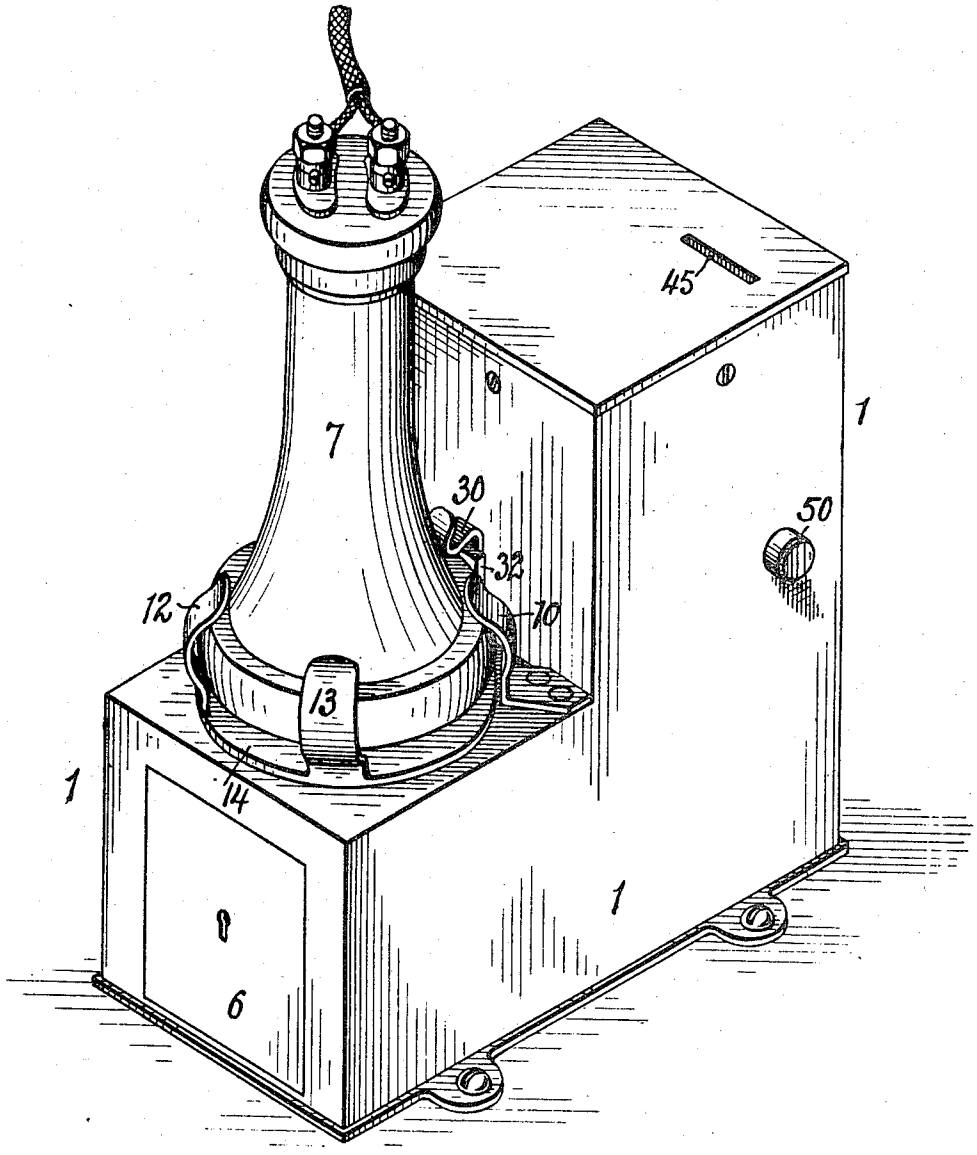

Witnesses:
Eli D. Bernheim
Laurence Goldbacher.

Inventor:
William W. Bythiner
By his Attorney
H. Wallace Goodwin

W. W. BYTHINER.

LOCKING DEVICE FOR TELEPHONE RECEIVERS.

APPLICATION FILED NOV. 11, 1912.

1,068,627. Patented July 29, 1913.

3 SHEETS—SHEET 2.

FIG. 2.

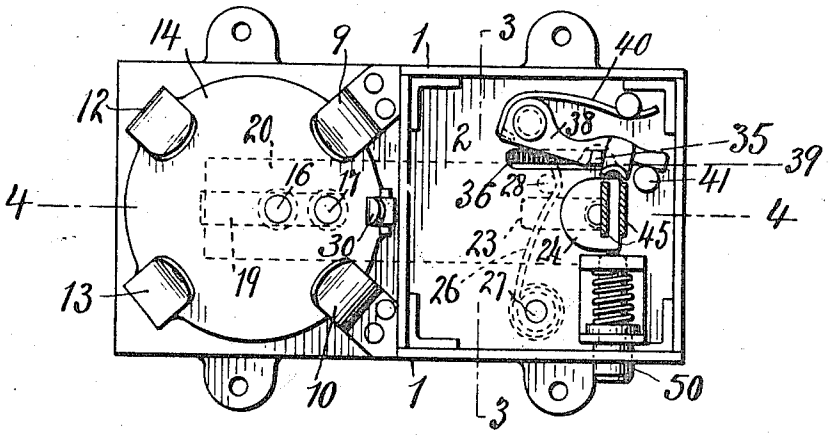

FIG. 3.

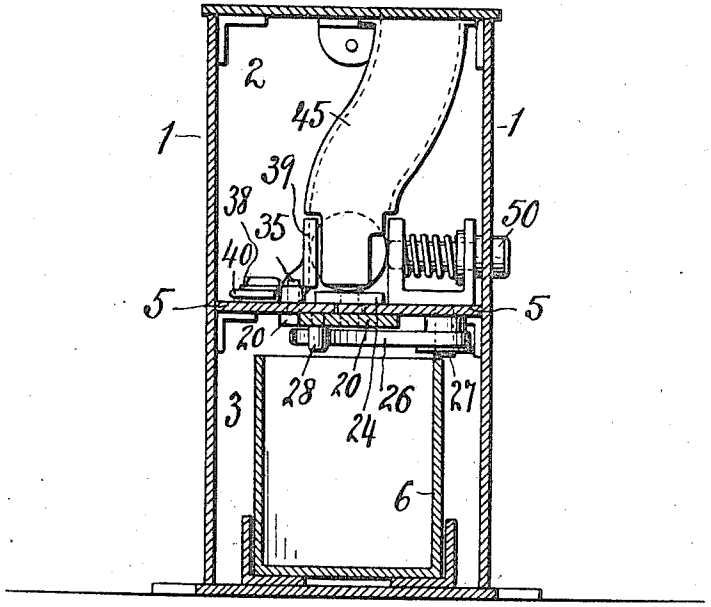

Witnesses:
Eli D. Bernheim
Laurence Goldbacher.

Inventor:
William W. Bythiner
By his Attorney
F. DeWitt Goodwin

W. W. BYTHINER.

LOCKING DEVICE FOR TELEPHONE RECEIVERS.

APPLICATION FILED NOV. 11, 1912.

1,068,627.

Patented July 29, 1913.

3 SHEETS—SHEET 3.

FIG. 4.

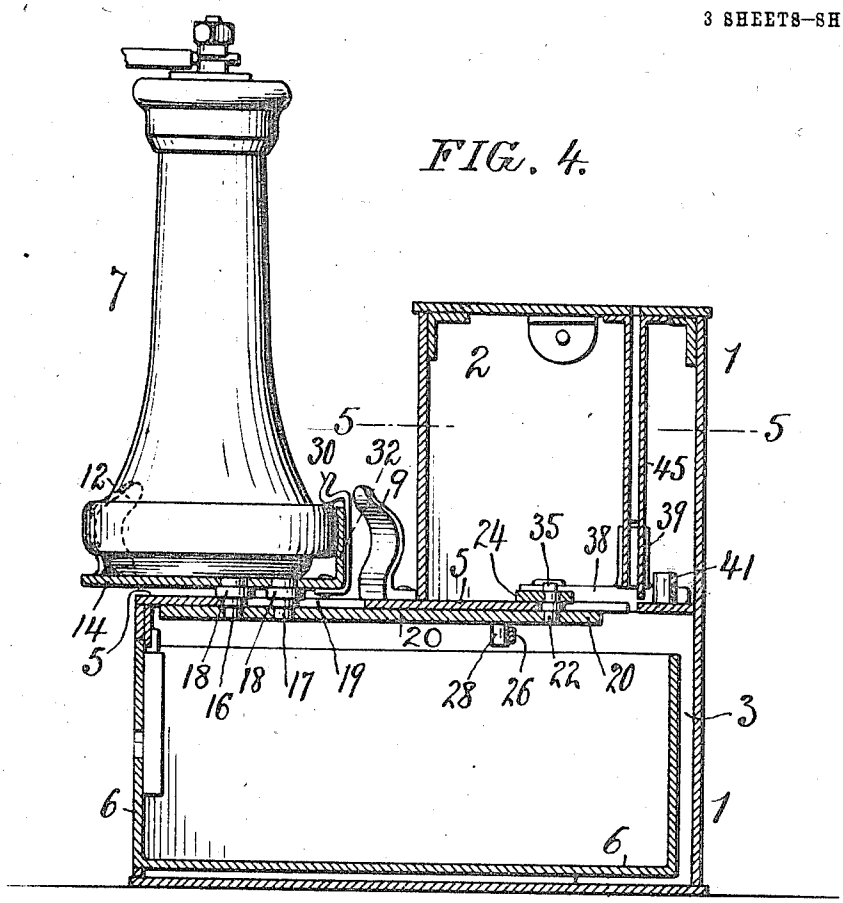

FIG. 5.

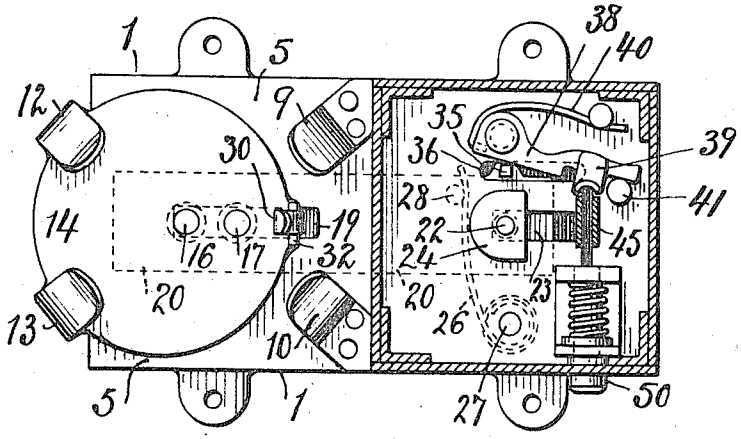

Witnesses:
Eli D. Bernheim
Laurence Goldbacher.

Inventor:
William W. Bythiner
By his Attorney
F. DeWitt Goodwin

UNITED STATES PATENT OFFICE.

WILLIAM W. BYTHINER, OF PHILADELPHIA, PENNSYLVANIA, ASSIGNOR OF ONE-HALF TO ELI D. BERNHEIM, OF PHILADELPHIA, PENNSYLVANIA.

LOCKING DEVICE FOR TELEPHONE-RECEIVERS.

1,068,627. Specification of Letters Patent. Patented July 29, 1913.

Application filed November 11, 1912. Serial No. 730,615.

To all whom it may concern:

Be it known that I, WILLIAM W. BYTHINER, a citizen of the United States, residing at Philadelphia, in the county of Philadelphia and State of Pennsylvania, have invented certain new and useful Improvements in Locking Devices for Telephone-Receivers, of which the following is a specification.

My invention relates to a device for locking telephone receivers and the object of my invention is to construct a device which may be located adjacent to a telephone instrument for locking the telephone receiver during the absence from the telephone of the party for whom the telephone message is intended.

A further object of my invention is to provide coin controlled mechanism for releasing the locking device so that the receiver may be removed from the locking device by inserting a coin; thus providing a method of collecting messenger toll charges for calling persons to a pay station telephone.

In the accompanying drawings: Figure 1, is a perspective view of my locking device for telephone receivers, showing a receiver locked therein; Fig. 2, is a plan view of Fig. 1 with the cover of the casing removed, showing the parts in the locked position, the receiver not being shown; Fig. 3, is a transverse vertical section on line 3—3, Fig. 2; Fig. 4, is a longitudinal vertical section on line 4—4, Fig. 2, showing the parts in the unlocked position and the receiver in place ready to be locked, and Fig. 5, is a horizontal section on line 5—5, Fig. 4, the receiver being omitted.

Referring to the drawings in which like references refer to like parts, 1 represents the casing comprising upper and lower compartments 2 and 3, separated by a plate 5, which forms a bearing-plate for the locking mechanism.

The receiver 7, is clamped between a movable clamping member and a fixed clamping member. The fixed clamping member consists of two curved plates 9, and 10, rigidly secured upon the upper side of the bearing-plate 5, and immediately in front of the front wall of the casing forming the upper compartment 2, which is smaller than the lower compartment 3, of the casing.

The movable clamping member consists of two curved plates 12, and 13, which project upwardly from the forward edge of the movable disk 14, of which said clamping plates 12 and 13 form a part, or to which they are rigidly attached. The movable member is carried by posts or bolts 16, and 17, rigidly secured to the disk 14. Said posts 16 and 17 extend through an elongated opening 19, formed in the bearing-plate 5, and are rigidly secured in the sliding-bar 20, which is located upon the under surface of the bearing-plate 5. The inner end of the sliding-bar 20, is held in position by a post 22, which extends through an elongated opening 23, in the bearing-plate 5, and the post 22 is secured in a guide-plate 24, which slides upon the upper surface of the bearing-plate 5, and is located within the upper compartment 2 of the casing.

The posts 16 and 17 are provided with collars 18, which are larger in diameter than the width of the opening 19, formed in the bearing-plate 5. Said collars 18, slide upon the upper surface of the bearing-plate 5 and prevent the posts from falling through the said opening 19. The collars 18, are of sufficient thickness to separate the disk 14, from the bearing-plate 5, to allow the disk 14, to move freely.

A spring 26, is provided to normally hold the sliding-bar 20, and the movable clamping member in the forward or open position, as shown in Figs. 4 and 5. The said spring 26, is rigidly secured at one end by the bolt 27, which enters the inner side of the bearing-plate 5, and the opposite end of the spring 26, presses against a pin 28, depending from the sliding-bar 20, and pushes the latter forward and normally holds the clamping members open.

When the clamping members are open, as shown in Figs. 4 and 5, a telephone receiver may be placed in a vertical position upon the disk 14, and the clamping plates 12, and 13, will embrace the enlarged end of the re-

ceiver. The receiver is held upon the disk 14 by said clamping plates 12 and 13 and by a spring-catch 30, located at the opposite side of the disk 14, from the clamping plates 12 and 13. The object of the spring-catch 30, being to prevent the receiver from tilting over and falling off the disk when the latter is forced forward by the action of the spring 26, upon the sliding-bar 20, which opens the clamping members.

Adjacent to the spring-catch 30, is an upright plate 32 which is rigidly attached to or made part of the disk 14. The said upright plate 32, being rigid, the receiver may be pushed against it to force the disk 14 carrying the movable clamping member into the locked position. When the movable clamping member is forced into the locked position as shown in Figs. 1, and 2, the inner edge of the enlarged end of the receiver will be forced under the curved plates 9, and 10, forming the fixed clamping member, and the receiver will be securely held between the clamping members.

The sliding-bar 20, carries an upwardly projecting post 35, located adjacent to its inner end and said post extends up through an elongated opening 36, formed in the bearing-plate 5, as shown in Figs. 2 and 5. The post 35, is engaged by a pawl 38, which holds the sliding-bar 20, in the locked position, as shown in Fig. 2. The pawl 38, is pivoted at one end to the bearing-plate 5, and a spring 40, is provided to hold the pawl 38, in engagement with the post 35, carried by the sliding bar 20. A stop 41, upon the bearing-plate 5, is also provided to limit the movement of the pawl 38, when it is not in engagement with the post 35. The pawl 38, is concealed within the upper compartment 2 of the casing and is inaccessible, so that the clamping members which lock the receiver can only be released by disengaging the post 35, of the sliding-bar 20, from the pawl 38.

The pawl 38, may be operated to disengage the post 35, by means of a coin controlled mechanism consisting of the chute 45, which conveys the coin to a position in alinement with a lug, 39, upon the pawl 38. The coin rests upon the rear edge of the guide-plate 24, of the sliding-bar 20, which prevents the coin from falling into the drawer 6, of the lower compartment 3, of the casing. The coin is held in a vertical position by the walls of the chute 45, and the coin may be pushed against the lug 39, on the pawl 38 by pushing the outer end of the shaft 50 until the pawl 38, releases the post 35 on the sliding-bar 20, which latter will be forced forward by the spring 26, and the clamping members will be separated so that the receiver can be removed from the locking device.

Having thus described my invention, I claim and desire to secure by Letters Patent:

1. In a device of the character described, the combination of a telephone receiver, a movable disk, a clamping member upon one side of said disk adapted to engage the enlarged end of the receiver when the latter is resting upon said disk, a spring catch upon the opposite side of the said disk adapted to engage the enlarged end of the said receiver, clamping members secured in a fixed position and means for locking the clamping members to secure said receiver between said clamping members.

2. In a device of the character described, the combination of a bearing plate, a clamping member secured thereon, a sliding bar, a clamping member upon said sliding-bar, and a pawl to automatically engage said sliding-bar.

3. In a device of the character described, the combination of a bearing plate, a clamping member secured thereon, a sliding-bar, a clamping member upon said sliding-bar, a pawl to automatically engage said sliding-bar, and a spring to act upon said sliding-bar to normally separate said clamping members.

4. In a device of the character described, the combination of a bearing-plate, clamping members secured upon said bearing plate, a disk slidably mounted upon said bearing-plate, clamping members upon one side of said disk, a rigid vertical plate located opposite said clamping members upon the disk, a spring catch upon said disk, locking mechanism to engage said sliding-plate, and connecting members between said sliding-plate and said disk.

5. In a device of the character described, the combination of a bearing-plate, clamping members secured upon said bearing-plate, a disk slidably mounted upon said bearing-plate, a sliding-bar below said bearing-plate, posts connecting said disk with said sliding-bar, said bearing-plate having elongated openings formed therein to receive said posts, a clamping member upon said disk, a spring to act upon said sliding bar to separate said clamping members and locking mechanism to engage said locking bar.

6. In a device of the character described, the combination of a bearing-plate, two curved clamping plates rigidly secured to said bearing-plate, a disk slidably mounted upon said bearing-plate, two curved clamping plates upon said disk oppositely disposed from said fixed clamping plates, and locking mechanism for securing said clamping plates in the contracted position.

7. In a device of the character described, the combination of a casing having upper

and lower compartments formed therein, a bearing-plate separating said compartments, said upper compartment being smaller than the lower compartment, a fixed clamping member upon said bearing plate in front of the upper compartment of said casing, a clamping member slidably mounted above said bearing-plate, and locking mechanism contained within the casing for locking said clamping members in the contracted position.

In testimony whereof I, have affixed my signature in presence of two witnesses.

WILLIAM W. BYTHINER.

Witnesses:

LAURENCE GOLDBACHER,

ARTHUR G. PENTON.