Dec. 29, 1931. E. A. DE WOLF 1,838,538

MOISTENING DEVICE

Filed Aug. 25, 1930 3 Sheets-Sheet 1

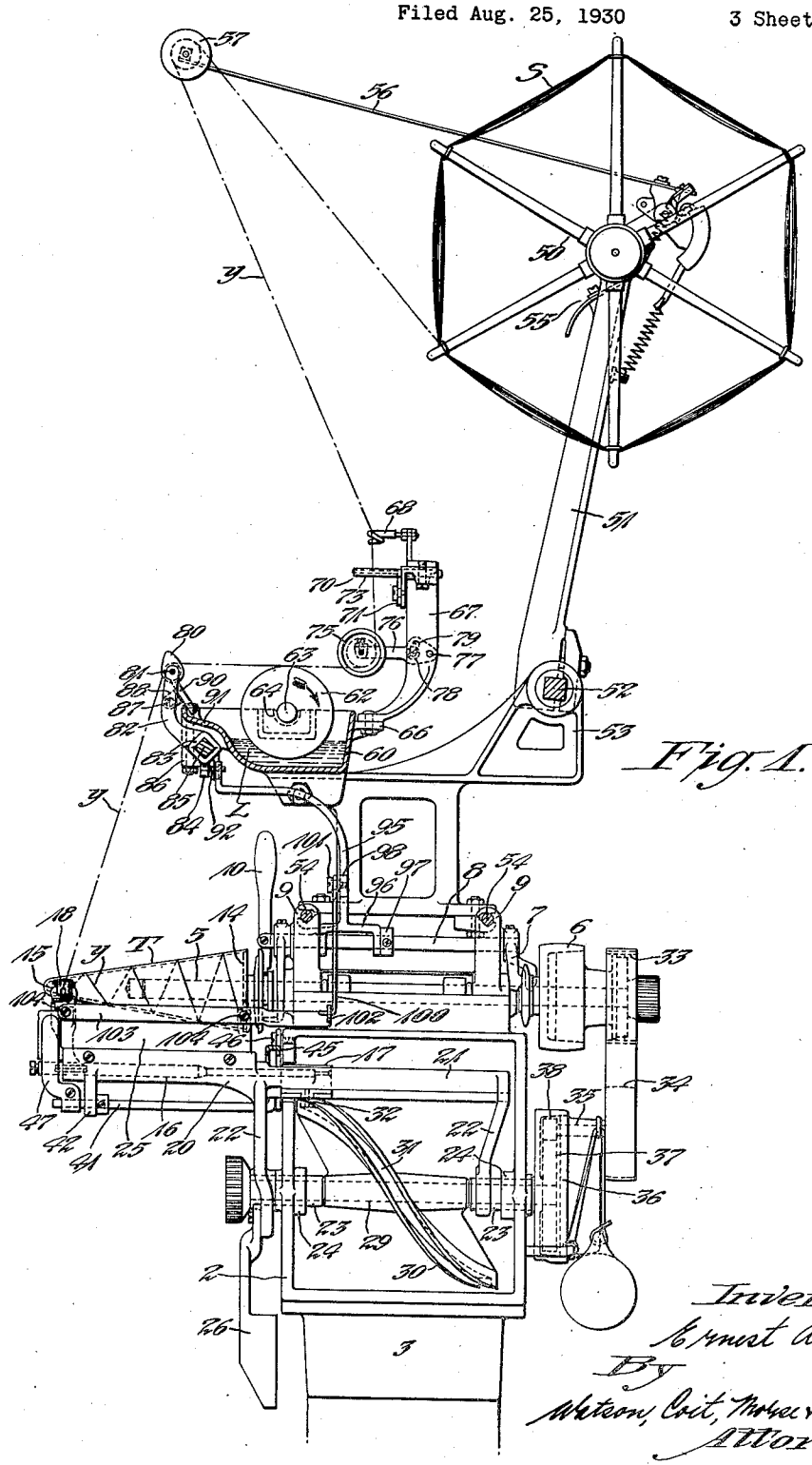

Fig. 1.

Inventor:
Ernest A. de Wolf,
By
Watson, Coit, Moser & Grindle
Attorneys.

Dec. 29, 1931. E. A. DE WOLF 1,838,538

MOISTENING DEVICE

Filed Aug. 25, 1930 3 Sheets-Sheet 2

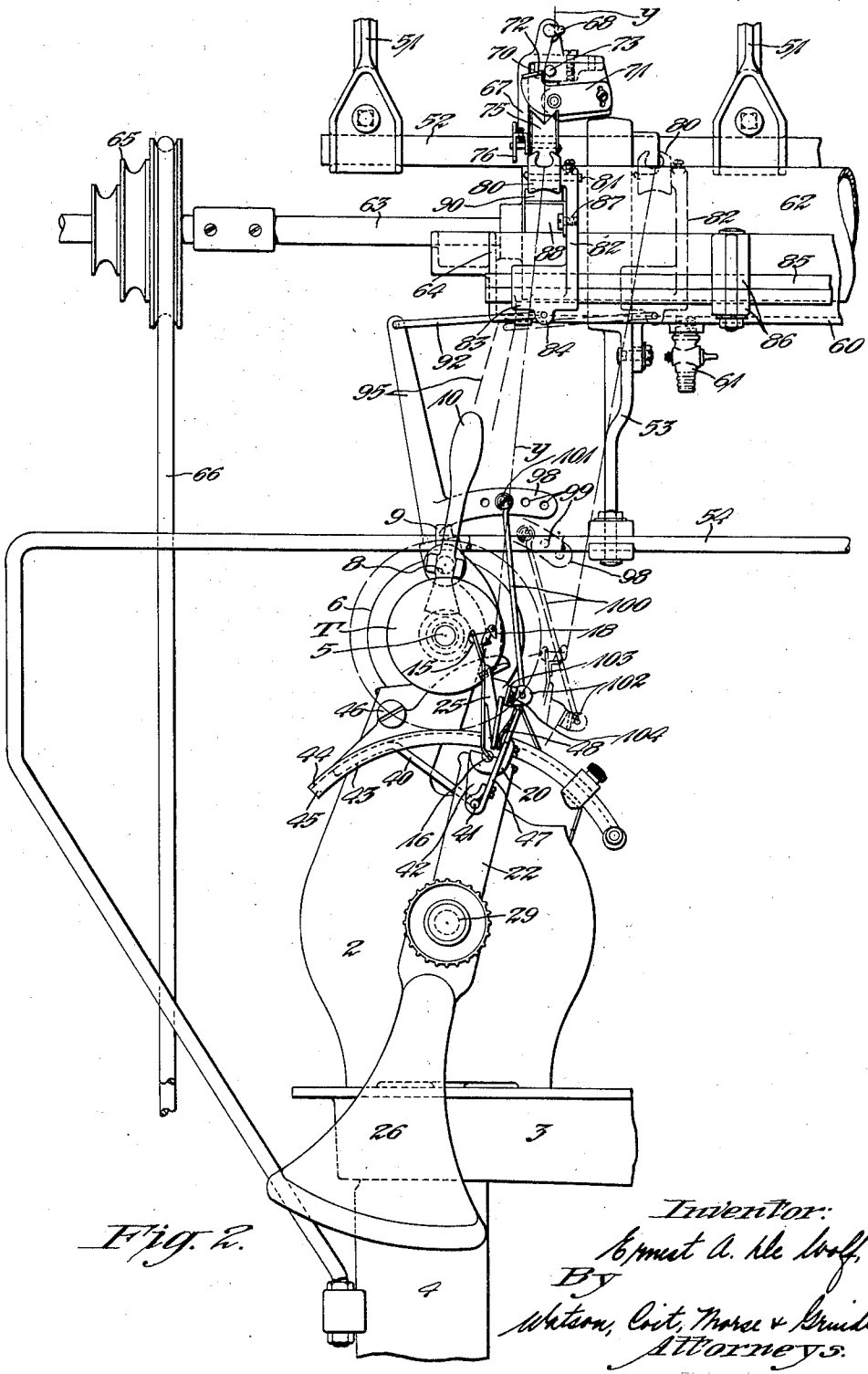

Fig. 2.

Inventor:
Ernest A. De Wolf,
By
Watson, Cole, Morse & Grindle
Attorneys.

Dec. 29, 1931. E. A. DE WOLF 1,838,538

MOISTENING DEVICE

Filed Aug. 25, 1930 3 Sheets-Sheet 3

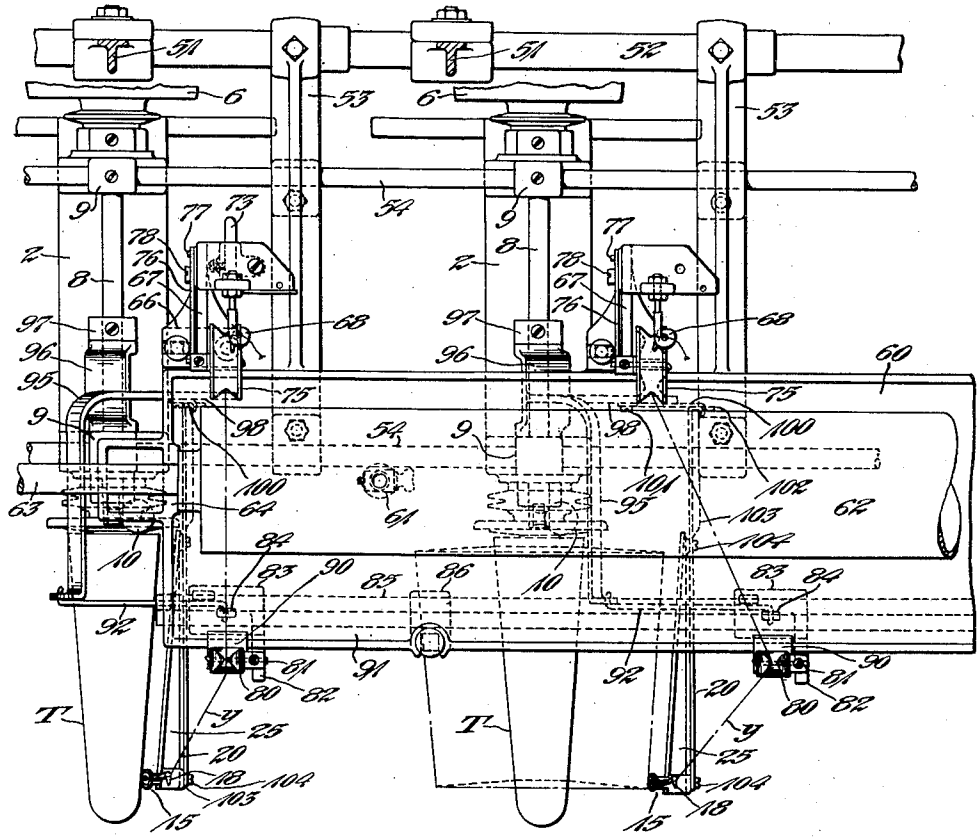

Fig. 3.

Inventor:
Ernest A. De Wolf,
By
Watson, Coit, Morse & Grindle
Attorneys.

Patented Dec. 29, 1931

1,838,538

UNITED STATES PATENT OFFICE

ERNEST A. DE WOLF, OF CRANSTON, RHODE ISLAND, ASSIGNOR TO UNIVERSAL WINDING COMPANY, OF BOSTON, MASSACHUSETTS, A CORPORATION OF MASSACHUSETTS

MOISTENING DEVICE

Application filed August 25, 1930. Serial No. 477,662.

This invention relates to a method and means for emulsifying or treating yarn and the like with liquids during the linear travel of the same as it is delivered from a source of supply in transfer processes such as the winding of a cop or package. In the present specification and claims the term "yarn" is used broadly to indicate any form of strand material such as rayon, cotton or the like, and the term "package" is employed in a generic sense to indicate the product of the machine in which or on which the yarn is moistened, emulsified or similarly treated.

One object of the invention is to provide an emulsifying apparatus or moistening-device for applying a uniform amount of liquid to the yarn during its linear travel whatever the rate of speed of its draft may be.

Another object of the invention is to provide a device of the type specified for use with winding machines wherein the yarn is wound on a support or holder having a constant speed of rotation with linear speed of the yarn increasing as the package grows in diameter.

Another object of the invention is to provide a device of the type specified having means for contacting the yarn with a wetted surface across which it travels and means for increasing the extent of its contact thereon as the linear speed of the yarn increases whereby to moisten the material to a uniform degree throughout the full length treated.

Another object of the invention is to provide a device of the type specified wherein the tension on the yarn is not materially altered or increased by the increase of its contact with the wetted surface; and also one in which the automatic adjustment of the contact does not impose abnormal pressure of the strand-guiding device against the package during the winding thereof.

Another object of the invention is to provide a device of the type specified which may be applied to use with winding machines of standard type to be operated automatically therefrom to apply a uniform amount of liquid to the running yarn.

Another object of the invention is to provide a device of the type specified which when once adjusted requires no further setting of its mechanism at the beginning of each winding operation.

Further objects of the invention are set forth in the following specification which describes a preferred form of construction of the apparatus, by way of example, as illustrated by the accompanying drawings. In the drawings:

Fig. 1 is a side elevation of a winding machine of conventional type showing the present improved emulsifying-apparatus or moistening-device applied to use therewith for automatic operation therefrom;

Fig. 2 is an enlarged end elevation of the winding machine showing the principal elements of the emulsifying-apparatus or moistening-device connected to be operated from the winding mechanism; and

Fig. 3 is an enlarged plan view showing a plurality of winding heads or units with the emulsifying-apparatus or moistening-device applied to use therewith.

Certain varieties of textile materials such as cotton and rayon yarns require conditioning by the application of liquid or an emulsion thereto and the process or treatment is most conveniently and economically practiced during the transfer of the material from one form of supply package to another. For example, it is the usual practice to emulsify or "oil" rayon yarns in transferring the same from skeins to cones or other forms of supply packages from which the material is eventually delivered to further processes such as weaving or knitting. Likewise, cotton yarns are moistened or treated in a similar manner during the process of winding the material from spools or bobbins onto cones or other forms of supply packages. In the present specification the improved emulsifying-apparatus or moistening-device is described and illustrated in connection with a machine for winding cones from skeins, the winding machine being of standard type for producing cross wound packages with a V-wind. In this type of winding machine the yarn is wound on a positively driven support or spindle having a substantially constant rate of speed so that as the package is built up in

overlying layers of increasing diameter the linear speed of the yarn is gradually accelerated from start to finish of the winding. To adapt the emulsifying-apparatus or moistening-device for use with machines of this type, or for other processes in which the yarn has a varying speed of draft, means are provided for gradually increasing the contact of the yarn on the wetted surface of the moistening element in accordance with the gain in the linear speed of the yarn.

Referring to the present drawings, in Figs. 1 and 2, 2 designates the box-like frame of the winding head or unit, a plurality of such units being generally arranged in gang form and supported from a bed or table 3 mounted on legs 4. Journaled in bearings in the upper portion of the frame 2 is a rotatable winding-spindle 5 which may be driven from any suitable source of power through the means of a belt-pulley 6 at its rearward end. The pulley 6 is connected to drive the spindle 5 through a clutch-device, not shown in detail, with the clutch operated from a lever 7 mounted on the end of a rockable rod 8. The rod 8 is carried in bearings 9 projecting from the top of the frame 2, and at its forward end is a handle or starting-lever 10 for manual control of the operation of the machine. Suitable detent-means, not herein shown or described in detail, are employed to maintain the starting-lever 10 in position to continue the operation of the machine and an automatic stopping-mechanism acts to release the detent-means to arrest the operation of the machine when the yarn breaks or its supply fails; all of which instrumentalities are well known to those versed in the art and therefore need no further reference herein.

Mounted on the forward projecting end of the winding-spindle 5 is a cop-holder 14 which, in the present embodiment of the invention, is shown as adapted for holding conical paper tubes T on which the yarn *y* is wound. The yarn is traversed lengthwise of the cop-tube or yarn-receiver T, to lay it in helical coils thereon, through the means of a reciprocating thread-guide indicated by the reference character 15. The thread-guide 15 is carried at the outer end of a reciprocable traverse-rod 16, the inner end of which is connected to a slide 17; the guide 15, traverse-rod 16 and slide 17 being mounted to slide on a swinging traverse-frame 20. An auxiliary guide 18 is supported on the main thread-guide 15 to direct the yarn thereto as it leads down from above.

The traverse-frame 20 consists essentially of a horizontal bar 21 supported from opposite legs 22 which are pivoted on bushings 23 held in hubs 24 at the sides of the frame 2. The outer overhanging portion of the traverse-frame 20 is provided with a back 25, against which the blade-like traverse-guide 15 bears as it slides therealong. The traverse-frame 20 is counterweighted by means of a downwardly-extending leg or arm 26, whereby its upper portion tends to swing towards the axis of the winding-spindle 5 to hold the thread-guide 15 bearing against the surface on which the winding is performed.

Journaled in the bushings 23 on the frame 2 is a horizontal cam-shaft 29 carrying fast thereon a helical cam 30. The cam 30 is provided with a helical groove 31 which engages with a bowl or follower 32 on the slide 17, this connection causing the traverse-bar 16 and the thread-guide 15 mounted thereon to be reciprocated during the rotation of the cam. The cam 30 may be driven from the winding-spindle 5 by any suitable means and, as herein shown, a belt-pulley 33 fast on the end of the spindle is connected to drive a pulley 34 on a countershaft 35. The countershaft 35 is journaled in a frame or gear-casing 36 carried on the end of the cam-shaft 29. Within the casing 36 is a gear 37 keyed to the cam-shaft 29 and meshing with a pinion 38 fast on the end of the countershaft 35.

As the yarn is traversed longitudinally of the winding-spindle 5 to deposit it in layers on the cop-tube T the thread-guide 15 is forced outwardly, thereby swinging the traverse-frame 20 on the axis of the cam 30. Means are usually provided for preventing the thread-guide 15 from moving back toward the winding-spindle, and in Fig. 2 of the drawings a traverse-frame dog 40 is shown as employed for this purpose. The dog 40 is of well known construction consisting in an arm or lever extending from a horizontal rod 41 which is rockably supported on the traverse-frame 20. As shown in Fig. 1, the rockable rod 41 extends through the leg 22 of the frame 20 and a bearing 42 disposed outwardly therefrom. The dog 40 has an arcuate, wedge-shaped portion 43 engaging in a correspondingly-formed groove 44 in a quadrant 45. The quadrant 45 is pivoted to the side of the frame 2 by means of a stud 46 and its upper portion is formed as one of the detents for the stopping-mechanism in accordance with the well known construction of winding machines of the present type. A finger-lever 47 fast on the outer end of the rock-shaft 41 extends upwardly into position opposite the traverse-frame back 25 with a spring 48 acting between the back and the lever to rock the shaft 41 to maintain a frictional grip of the dog 40 against the tapered groove of the quadrant 45.

The strand material may be supplied to the machine in any well known manner, Fig. 1 of the present drawings illustrating the yarn *y* as delivering from a skein S held on a rotatable swift or reel 50. The swift 50 is rotatably supported between upright arms 51 carried on a rectangular rod 52 held in

brackets 53 surmounting the top of the main frame 2. As shown in Fig. 1, the brackets 53 are clamped to tie-rods 54 extending longitudinally through the lugs or extensions 9 at top of the several frames 2, a series of the brackets being arranged at intervals along the gang of heads mounted on the bed 3. Suitable braking-means, indicated generally at 55 in Fig. 1, are employed to control the rotation of the swift 50 to prevent the yarn from overrunning and to apply tension to the strand as it delivers to the winding. The braking-means 55 is controlled from a wire arm 56 carrying a sheave or pulley 57 at its outer end over which the yarn leads as it draws off from the skein S. As the yarn delivers from the skein S and over the sheave 57 it is directed down through the moistening- or emulsifying-device which is constructed and arranged as next described.

Supported on the brackets 53 is a tray-like trough or tank 60 extending the whole length of the gang machine above the individual winding-heads or units. The trough 60 is adapted to contain a liquid indicated at L; for example, an emulsion having an oil base, or any other suitable conditioning solution in accordance with the requirements of the material to be treated. The trough 60 may be provided with one or more drain-cocks 61 for draining off the liquid L when it is desired to clean the trough and replenish the solution. Partially immersed in the liquid L is a moistening roll or wet-cylinder 62 carried on a rotatable shaft 63 journaled in open bearings 64 at the ends of the trough 60. Referring to Fig. 2 of the drawings, one end of the shaft 63 carries a stepped pulley 65 adapted to be driven from a belt or band 66 connected to a similar pulley on a countershaft or other rotating part connected with the winding machine. Usually, the shaft 63 is driven from a countershaft journaled in bearings on the legs 4 of the gang machine, these connections not being herein shown or described in detail as they form no part of the present invention. Suffice it to state that the shaft 63, and thereby the moistening roll or cylinder 62, are driven at a suitable speed to maintain the surface of the roll wetted to the proper degree from the bath of fluid or emulsion in the trough 60.

Attached to lugs 66 at the rearward side of the trough 60 are a series of upright arms or brackets 67, one for each unit of the gang machine, which support means for guiding the yarns down from the sheaves 57 on the control-arms 56 to direct the strands across the top of the roll or cylinder 62. At the top of each bracket 67 is mounted a porcelain pigtail-guide 68, and arranged therebeneath is a slub-catcher 70 for cleaning the yarn of specks, motes, fluff and the like. The slub-catcher 70 may be of any suitable construction, Fig. 2 of the drawings illustrating it as comprising an adjustable arm 71 having a blade 72 adapted to be set in opposite spaced relation to a pin or stud 73. The yarn *y* passes down through the pigtail 68, draws through the opening between the blade 72 and the pin 73 and thence leads around a grooved sheave 75. The sheave 75 is journaled at the end of an arm 76 pivoted at 77 on the bracket 67. A screw 78 passes through an arcuate slot 79 in the arm 76 to secure the latter fixedly in place on the bracket 67; the screw and slot connection providing for angular adjustment of the arm 76 to raise or lower the sheave 75 in relation to the roll 62. Through this arrangement the sheave 75 may be set in different positions to regulate the course of the yarn *y* across the roller 62 to effect a tangential contact therewith. A poreclain guide 80 located on the opposite side of the roller 62 serves as a further means to direct the course of the yarn from the sheave 75 across the top of the roller. The guide 80 is carried on a pin 81 secured fast in the upper end of an arm 82. The arm 82 has a hub 83 mounted to slide on a horizontal rod 85 extending horizontally throughout the length of the roll 62 to accommodate a plurality of these sliding guides, one for each winding unit. The rod 85 is supported in clamp-like bearings 86 on the front of the trough 60.

Fastened to the side of the arm 82 at 87 is a sheet-metal, angularly-shaped plate 88 having a felt wick 90 cemented to its side. The wick 90 bears against the underside of the grooved porcelain guide 80 and extends down across an outwardly projecting lip 91 on the front of the trough 60, being employed to absorb the moisture collected on the guide and drain it down into the tank or trough.

The guide 80 is adapted to be shifted longitudinally of the axis of the wet-roll 62 to displace it laterally with respect to the guide-sheave 75, whereby to cause the yarn drawing between these elements to be extended along the periphery of the roller to increase its contact therewith. The contact of the yarn with the roller is augmented in proportion as its linear speed increases from start to finish of the winding while the package grows in diameter. The lateral movement of the guide 80 to increase the contact of yarn on the roller 62 is effected by sliding the arm 82 along the rod 85 through means operated from the swinging traverse-frame 20 of the winding machine.

The rod 85 is preferably rectangular in cross-section and the hub 83 of the arm 82 has its bore fitted thereto to prevent it from turning on the rod. Engaging a hole in a lug 84 on the bottom of the hub 83 is a wire link 92 connected at its opposite end to a lever 95. The lever 95 is of angular or elbow-shape as shown in Fig. 1 of the drawings, with its lower end terminating in a yoke 96 pivoted on

the rocker-shaft 8 at the top of the frame 2 of the winding machine. A collar 97 abutting one end of the yoke 96 holds its opposite end against the side of the bearing 9 on the frame 2 to maintain the lever in fixed position while adapting it to pivot on the shaft or rod 8. The lever 95 is provided with an arcuate arm or extension 98 projecting laterally from its main arm at a point adjacent its fulcrum, thus forming a bell-crank. The arm 98 is provided with a series of screw-threaded holes 99 for connecting it with a link 100, the lower end of which is coupled to the traverse-frame 22. As shown in Figs. 1 and 2 of the drawings, the link 100 has an eye at its upper end through which a stud 101 is passed with its end screwed into one of the holes 99 in the arm 98 of the lever 95. The lower end of the link 100 is hooked through an ear 102 at the end of a bar 103, the latter being secured fast to the back 25 of the traverse-frame 22 by means of screws 104. The screws 104 are employed ordinarily to attach a thread-bail, not shown, to the traverse-frame back 25 and thus the connection between the lever 95 and the transverse-frame 22 may be made through means already provided on the machine without requiring alteration in the design or construction of its parts. It is here noted that the purpose of the series of holes 99 in the arm 98 of the lever 95 is to provide for adjusting the connection of the lever with the traverse-frame 22 to effect a greater or less range of sliding movement of the thread-guide 80 in proportion to the outward movement of the thread-guide 15 away from the axis of the package being wound as the latter increases in diameter.

The construction and arrangement of the parts of the present improved apparatus having now been described in detail, its method of operation will next be explained. To prepare the machine for winding a skein S is placed upon the swift 50 and the end of the yarn drawn off therefrom and led over the pulley 57, thence down through the guide 68, slub-catcher 70, and around the sheave 75. From the sheave 75 the yarn is led outwardly across the top of the wet-roll 62, through the shiftable guide 80 and thence down through the auxiliary guide 18 to the groove or slot in the thread-guide 15. The end of the yarn is made fast to the cop-tube T or other yarn-receiver held on the winding-spindle 5 and the machine is ready for starting; it being noted that the pulley 75 is adjusted in position with respect to the wet-roll or cylinder 62 to cause the yarn to make tangential contact with the top of the cylinder to give the proper moistening effect.

When the machine is started to operate by throwing the lever 10 the thread-guide 15 is reciprocated longitudinally of the winding-spindle 5 under the impulse of the cam 30 and the yarn will be traversed back and forth on the cop-tube T to dispose it in helical coils which build up in cross-wound layers constituting the cone or other form of package as required.

It has been explained that the wet-roll or cylinder 62 is rotated from a going part of the winding machine, the direction of its rotation being preferably clockwise as viewed in Fig. 1 and indicated by the arrow in this view. As the winding proceeds and the yarn is drawn down through the guiding-means 68 and 75 and thence across the top of the roll 62, the roll being immersed in the liquid L will carry a predetermined amount thereof upwardly to apply it to the yarn during its contact with the top of the roll. Only a slight contact of the yarn on the roll is necessary to condition the material to the proper degree at the start of the winding when the linear speed of the strand is relatively slow. As the cop or package builds up on the cop-tube T and its diameter increases, however, the linear speed of the yarn will be gradually increased and therefore a more extended contact of the yarn on the roll is necessary to apply the proper degree of conditioning thereto. The increase in contact of the yarn on the roll 62 is accomplished by the lateral shifting of the guide 80 carried on the arm 82 which slides along the rod 85. The sliding action of the arm 82 is effected, as before explained, under the movement of the thread-guide 15 outwardly away from the winding-spindle 5 as the package grows in size. As the thread-guide 15 is forced outwardly the traverse-frame 20 is swung to the right, as viewed in Fig. 2 of the drawings, and thereby it exerts a pull on the link 100 to draw the arm 98 of the bell-crank lever 95 downwardly. The bell-crank lever 95 is thus rocked in a clockwise direction, as viewed in Fig. 2, to cause the link 92 connected to its upper end to slide the arm 82 to the right on the rod 85. In Fig. 2 the full lines represent the position of the guide 80 at the commencement of winding a package, while the dash lines show the eventual position of the guide after it has been slid along the rod 85 by the outward movement of the traverse-frame 20 under the impulse of the growing cop acting on the thread-guide 15.

At the start of the winding the course of the yarn across the top of the wet-roll 62 is at substantially right-angles to the axis of the roll as illustrated at the left in Fig. 3, the yarn extending in an approximately straight line tangent to the periphery of the roll and therefore having only a slight contact therewith. As the winding operation proceeds and the guide 80 is shifted longitudinally of the axis of the roll 62 to the position shown at the right in Fig. 3, the course of the yarn y will assume a lessened inclination to the axis of the roll 62, and therefore the extent of

contact of the yarn with the roll will be increased. It will be apparent that as the package grows in diameter and its peripheral speed is increased the linear speed of the yarn being wound on its surface is increased so that normally it would have a gradually reduced period of contact on the surface of the wet-roll. Through the automatic operation of the means for changing the path of the yarn across the roll, that is, the shiftable guide 80, the yarn is given a more extended contact with the surface of the roll in proportion to the increase in its linear speed and thereby the amount of conditioning fluid applied to the yarn is made substantially constant and uniform throughout the whole winding of the package.

Any surplus moisture carried along by the strand y is dislodged as it passes through the porcelain guide 80 and absorbed by the wick 90 to drain it back into the tank 60.

It will be observed from the foregoing that the present invention provides a particularly efficient means for moistening or similarly conditioning thread, yarn or the like, whereby to apply a uniform amount of the liquid or solution to all portions of the strand during its delivery to the winding machine, notwithstanding the linear speed of the yarn is constantly changing. The means for regulating the amount of liquid applied to the yarn is operated automatically from the winding mechanism and requires no adjustment at each operation of the machine after the device has once been set to insure the proper results.

A particular feature of improvement of the present invention consists in the method of increasing the contact of the yarn on the wetted roll or cylinder by altering its direction of draft thereacross without diverting it from a straight course. That is to say, the yarn always leads in a straight line across and tangent to the periphery of the roll without being bent therearound. Due to this fact there is no appreciable increase in the resistance to the draft on the yarn or, in other words, the tension on the yarn is not increased to the detriment, of the winding. As another important feature, the change in the direction of draft of the yarn is accomplished without unduly increasing the pressure of the thread-guide against the package being wound as is the case with previous devices where the yarn must be bent around the wetted element and thus causes considerable resistance to the shifting of the guide or other part which is moved to divert the yarn out of a straight course.

The present improved moistening apparatus is preferably located above the winding machine to be out of the way while at the same time in convenient position for observation and attention when required. While the present drawings illustrate the moistening or conditioning device as applied to use with a winding machine of certain type, it is to be understood that the apparatus may be employed with winders of different construction and also with other types of machinery for transferring yarn or thread from one process to another. It is also to be understood that while the present application illustrates the apparatus adapted for treating or conditioning yarn delivering from a skein, it may also be employed with other forms of supplies such as cops, bobbins or the like by rearrangement of the guiding-means for the yarn when necessary.

Various modifications may be made in the form and construction of the apparatus and the method of applying it to use without departing from the spirit or scope of the present invention. Therefore, without limiting myself in this respect, I claim:

1. An apparatus for treating yarn and other textile materials comprising an element having a cylindrical surface, means for applying moisture to said surface, means for feeding the yarn across the cylindrical surface in tangent relation thereto, and means for altering the course of the yarn to incline it at a less angle to the axis of the cylindrical surface whereby to increase its extent of contact therewith to compensate for an increase in the linear speed of the yarn.

2. An apparatus for treating yarn and other textile materials comprising a cylinder, means to apply liquid to the surface of said cylinder, means to direct the yarn in a straight course across the periphery of the cylinder substantially tangentially thereof, and means to gradually change the course of the yarn to incline it toward the axis of the cylinder to increase its extent of contact therewith whereby to compensate for an increase in the linear speed of the yarn.

3. In an apparatus for treating yarn and other textiles, the combination of a rotary cylinder, means for wetting the surface of the cylinder, means for feeding the yarn across the surface of the cylinder in substantially tangential contact therewith, and means for gradually shifting the course of the yarn to cause it to feed at a lessening angle to the axis of the cylinder whereby to increase its extent of contact with the surface thereof to compensate for an increase in the linear speed of the yarn.

4. In combination with a winding machine having means for rotating a package at a substantially constant speed to wind the yarn thereon in successive layers, a rotary cylinder, means for applying liquid to the surface of the cylinder, means for feeding the yarn across the surface of the cylinder to deliver it to the winding operation, means for directing the yarn in a straight course substantially tangent to the periphery of the cylinder, and means operative during the increase in

linear speed of the yarn due to the growth of the package to shift the course of the yarn to cause it to feed at a gradually lessened inclination with respect to the axis of the cylinder whereby to increase its extent of contact therewith.

5. In a winding machine, means for rotatably supporting a yarn-package, means for traversing yarn to deposit it on the package in overlying layers, a rotary element having a cylindrical surface, means to apply liquid to said surface, means to direct the yarn across the cylindrical surface in a straight course substantially tangent with respect thereto, and means operated by the growth in diameter of the package being wound to gradually shift the course of the yarn to cause it to feed at a progressively lessened inclination to the axis of the rotary element whereby to increase its extent of contact with the surface thereof.

6. In a winding machine, the combination of a winding-spindle, means to rotate the spindle at a constant rate of speed, means for traversing yarn to wind a package on the spindle. said spindle and traversing-means being arranged to separate as the winding increases in diameter, an element having a cylindrical surface across which the yarn draws, means to apply liquid to said surface, means to direct the yarn in a straight course normally at substantially right-angles to the axis of the cylindrical surface and tangent with respect thereto, and means actuated by the separation of the winding-spindle and traversing-means to gradually shift the course of the yarn to cause it to feed at less inclination to the axis of the cylindrical surface whereby to increase the extent of its contact therewith.

7. In a winding machine, the combination of a winding-spindle, means to rotate the spindle at a substantially constant rate of speed, means for traversing yarn longitudinally of the spindle to wind a package thereon, said winding-spindle and traversing-means being adapted to separate as the package increases in diameter, a trough for liquid arranged adjacent the winding-spindle, a roll rotatable in the liquid in said trough, means for supporting a supply of yarn, means for directing the yarn from the supply across the roll in tangent relation with respect to its periphery, and means operated by the separation of the winding-spindle and traversing-means to gradually shift the course of the yarn as the package increases in diameter and the linear speed of the yarn is accelerated to cause the yarn to travel in a course of less inclination with respect to the axis of the roll whereby to increase its extent of contact therewith.

8. In a winding machine, the combination of a winding-spindle, means to rotate said spindle, means for traversing yarn to wind a package on the spindle, a supply-holder arranged above the winding-spindle, a trough for liquid, a cylinder rotatable in the liquid in said trough to maintain its surface in moistened condition, guiding-means for directing the yarn from the supply-holder downwardly and across the top of the cylinder in substantially tangent relation to its periphery, and means operated from the growth of the package being wound to displace the guiding-means to cause the yarn to feed across the cylinder at a gradually lessened angle with respect to its axis whereby to increase the extent of contact of the yarn on the wetted surface of the cylinder.

9. In a winding machine the combination of a winding-spindle, means for traversing yarn longitudinally of the spindle to wind a package, a trough for liquid arranged above the spindle, a cylinder rotatable in the trough to maintain its surface wetted, a supply-holder, guiding-means for directing the yarn from the supply-holder to the wetted cylinder, a shiftable guide normally arranged to direct the yarn from the first guiding-means across the top of the cylinder in tangent relation with the periphery thereof, and means operated during the growth of the package being wound to displace the shiftable guide to cause the yarn to feed in a path having a gradually lessened inclination with respect to the axis of the cylinder.

10. In a winding machine, means for rotatably supporting a package, means for traversing yarn on the package, a trough for containing liquid, a cylinder rotatable in the liquid in said trough, a supply-holder, a guide for directing the yarn from the supply-holder to one side of the cylinder, a second guide on the opposite side of the cylinder arranged to direct the yarn from the first guide in a straight course at substantially right-angles to the axis of the cylinder and tangent to its periphery, and means actuated by the growth in diameter of the package being wound to displace the second guide to cause the yarn to lead at a progressively lessened angle with respect to the axis of the cylinder to increase its extent of contact therewith.

11. In a winding machine, the combination of means for rotatably supporting a package, means for traversing yarn on the package, said traversing-means arranged to recede from the axis of the package during the increase in diameter thereof, a rotary cylinder, means for applying liquid to the surface of said cylinder, a supply-holder, means for directing the yarn from the supply-holder to one side of the cylinder, a guide at the opposite side of the cylinder normally positioned to direct the yarn across the cylinder at substantially right-angles to its axis and tangent with respect to its periphery, and means actuated by the recession of the

traversing-means during the growth in the winding to shift said guide longitudinally of the cylinder to cause the yarn to feed in a path of progressively lessened inclination with respect to the axis of the cylinder.

12. In a winding machine, the combination of a winding-spindle, a thread-guide for traversing yarn to wind a package on the spindle, means for effecting separation of the spindle and thread-guide as the winding increases in diameter, a rotary cylinder, means for applying liquid to the surface of said cylinder, a supply-holder, fixed guiding-means for directing the yarn from the supply-holder toward the cylinder, a second guide arranged opposite the first guiding-means to normally direct the yarn therefrom in a straight course across the top of the cylinder substantially tangent with its periphery, and means actuated by the separation of the winding-spindle and thread-guide to slide the second guide longitudinally of the axis of the cylinder to direct the course of the yarn at a gradually lessened inclination with respect to the axis of said cylinder.

13. In a winding machine, the combination of a winding-spindle, a reciprocable thread-guide, a traverse-frame for supporting the thread-guide to adapt it to recede from the winding-spindle as the winding increases in diameter, means to rotate the winding-spindle and reciprocate the thread-guide, a trough for liquid arranged adjacent the winding-spindle, a cylinder rotatable in the liquid in said trough, a supply-holder, a guide for directing the yarn from the supply-holder to the cylinder, a second guide arranged opposite the first guide and mounted to slide longitudinally of the cylinder, said guides being normally disposed in position to direct the yarn in a straight course across the top of the cylinder at right-angles to its axis and tangent to its periphery, and means actuated by the movement of the traverse-frame as the guide recedes from the winding-spindle to slide the second guide along the cylinder.

14. In a winding machine, the combination of a winding-spindle, a thread-guide reciprocable with respect thereto, a traverse-frame for supporting the thread-guide to adapt it to recede from the winding-spindle as the winding increases in diameter, a trough for containing liquid, a cylinder rotatable in the liquid in said trough, a supply-holder, a guide for directing the yarn from the supply-holder to one side of the cylinder, a second guide at the opposite side of the cylinder, means for mounting the second guide to adapt it to slide longitudinally of the axis of the cylinder, means for adjusting the position of one of said guides whereby to cause the yarn to feed in a straight course tangent with the periphery of the cylinder, and means actuated by the movement of the traverse-frame to slide the second guide along the cylinder during the growth in the package wound on the spindle.

15. In a winding machine, the combination of a winding-spindle, a reciprocable thread-guide for traversing yarn to wind a package on the spindle, a traverse-frame for supporting the thread-guide to adapt it to recede from the winding-spindle during the growth in the winding, a rotary cylinder, means for applying liquid to the surface of said cylinder, a supply-holder, means for guiding the yarn from the supply-holder to the cylinder, a shiftable guide arranged opposite the first guiding-means and slidable longitudinally of the cylinder, a lever connected to slide the shiftable guide, and means connecting the traverse-frame to actuate the lever as the thread-guide recedes from the winding-spindle.

16. In a winding machine, means for rotatably supporting a yarn-package, means for traversing yarn to deposit it on the package in overlying layers, a moistening-element having a cylindrical surface, means to apply liquid to said surface, means to direct the yarn across the cylindrical surface in a straight course substantially tangent with respect thereto, means operated by the growth in diameter of the package being wound to gradually shift the course of the yarn to adapt it to feed at a progressively lessened inclination to the axis of the cylindrical surface to increase its extent of contact therewith, and means to regulate the action of the shifting-means to vary its range of movement.

17. In a winding machine, the combination of a winding-spindle, a reciprocable thread-guide for traversing yarn to wind a package on the spindle, a traverse-frame for supporting the thread-guide to adapt it to recede from the winding-spindle during the growth in the winding, a cylindrical surface, means for applying liquid to said surface, a supply-holder, guiding means for directing the yarn from the supply-holder across the cylindrical surface substantially tangent to its periphery, a lever for shifting the guiding-means to cause the yarn to be guided across the cylindrical surface at a progressively lessened angle with respect to its axis, means connecting the traverse-frame to operate said lever, and means for adjusting the connection between the traverse-frame and lever to regulate the extent of movement of the guiding-means.

In testimony whereof I hereunto affix my signature.

ERNEST A. DE WOLF.