Nov. 23, 1943. S. A. HARRIS 2,335,060

ELECTROFORMING METHOD OF PRODUCING TUYERES

Filed July 17, 1940 2 Sheets-Sheet 1

Fig. 1.

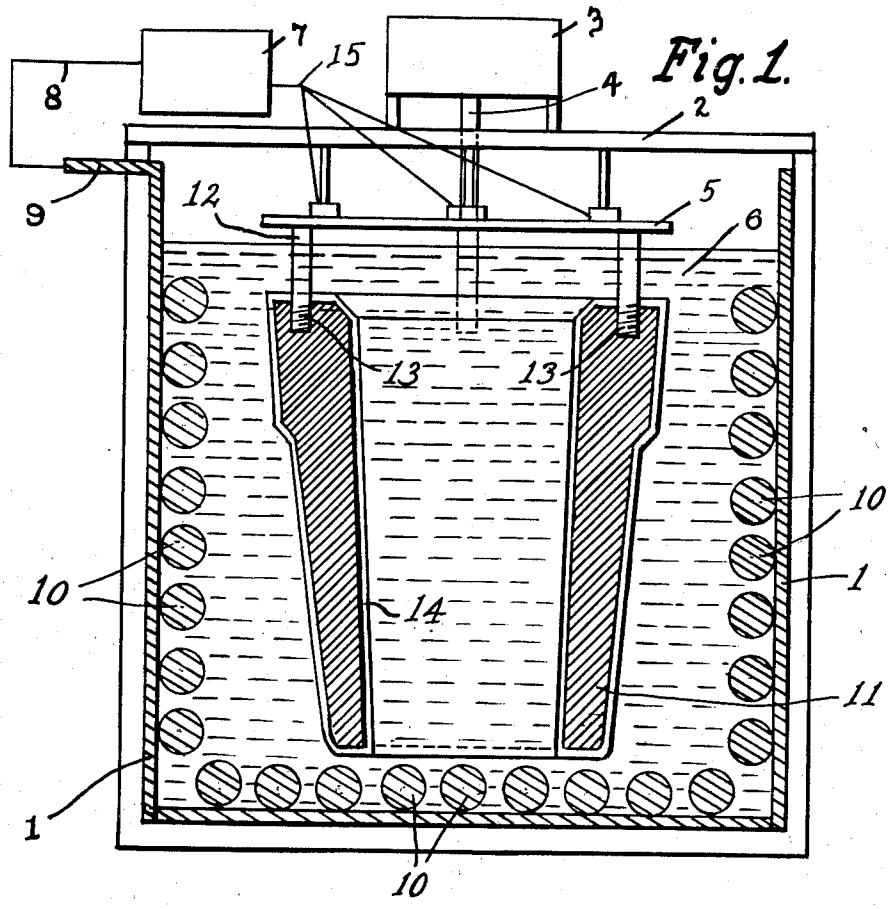

Fig. 3.

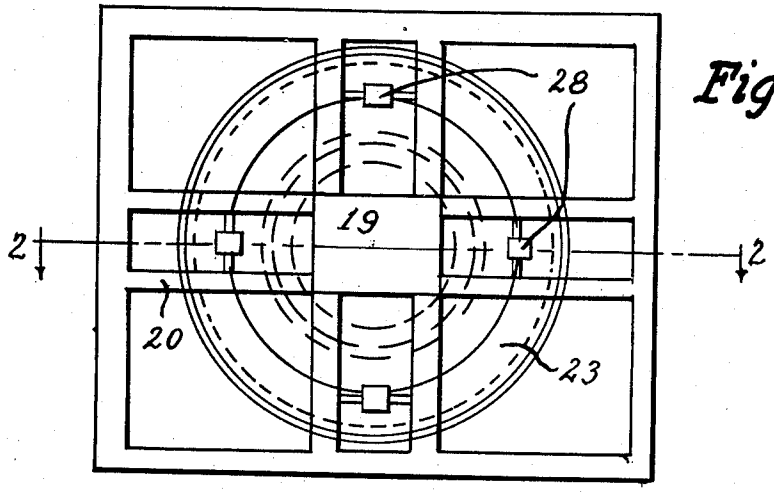

Inventor

S. A. Harris

By

Patterson, Wright & Patterson

Attorneys

Nov. 23, 1943. S. A. HARRIS 2,335,060

ELECTROFORMING METHOD OF PRODUCING TUYERES

Filed July 17, 1940 2 Sheets-Sheet 2

Fig. 2.

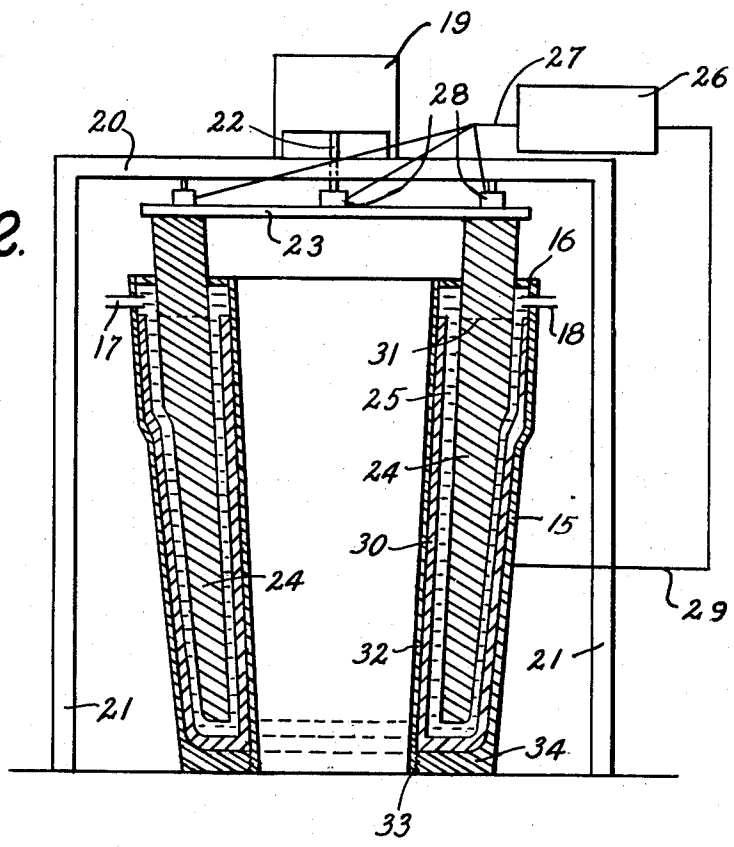

Fig. 4.

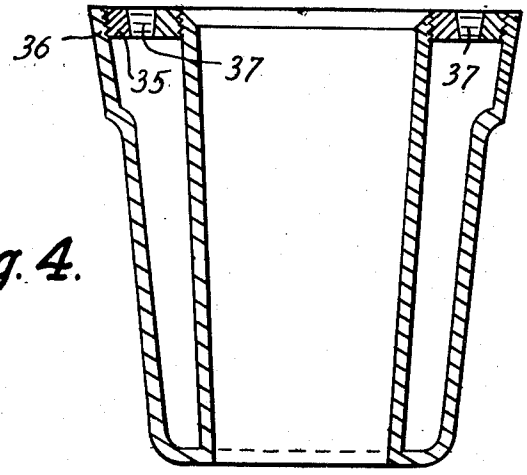

Inventor

S. A. Harris

By

Patterson Wright & Paterson

Attorneys

Patented Nov. 23, 1943 2,335,060

UNITED STATES PATENT OFFICE

2,335,060

ELECTROFORMING METHOD OF PRODUCING TUYÈRES

Sadie A. Harris, Warren, Ohio

Application July 17, 1940, Serial No. 346,043

1 Claim. (Cl. 204—9)

This invention relates to improved tuyères and tuyère coolers and the method of producing the same.

Those familiar with blast furnaces known that in respect to each furnace there is ordinarily provided a plurality of tuyères which are concentrically arranged within the tuyère coolers and that the function of the tuyères is to provide a passageway for the blast. They will also know that ordinarily the inner end or nose of the tuyère extends into the furnace beyond the cooler and that similarly to the cooler the tuyère is cooled by maintaining a flow of water continuously through it.

It is also commonly known that the noses or inner ends of the tuyères as well as the portion of the cooler which is within the furnace are subjected to chemical and thermal influences and conditions include a corrosive action due to the contents of the furnace with the result that tuyères and tuyère coolers as now manufactured and commonly in use constitute an exceedingly high item of upkeep and expense in that they have an extremely short life which necessitates their removal and replacement.

The present invention has as its primary object the provision of tuyères and tuyère coolers which will have a much longer life than any now known or in use.

It is now ordinary practice to produce tuyères and tuyère coolers by casting the metal of which they are formed. Making these devices or articles by a casting method necessitates the inclusion of metal other than the primary metal of which the article is composed and these inclusions, which might well be referred to as impurities in that they are of a different metal than the primary metal, reduce the heat transfer efficiency of the tuyères and coolers because the impurity does not have as great a heat transfer ratio as does the primary metal.

Accordingly another object and improvement of the present invention is that of providing tuyères and tuyère coolers which are composed of a pure metal and thus have a higher heat transfer efficiency and ratio.

In the practice of the present method the tuyères and tuyère coolers are produced in their entirety of electro-forming, by which is meant that the devices are formed in their entirety by the electrodeposit of that particular metal of which they are to be composed. The production and formation of the articles by electroforming produces a finished product built up from metal which is first in solution with the result that the metallic particles, each of which is very small, are closely associated in the finished product with the result that the efficiency or ratio of heat transfer is greater than in tuyères and tuyère coolers produced in any other manner.

In tuyères and tuyère coolers as heretofore constructed by the casting method the interior surfaces over which water flows in its cooling operation are not smooth as will be readily recognized by those having familarity with the production of castings. This rough inner surface acts to retard the flow of water through the tuyères and tuyère coolers with the resultant reduction to the cooling efficiency of the water, whereas with a tuyère or tuyère cooler produced by the present improved method the interior surfaces of these articles are smooth which gives the advantage of a faster flow of water and a higher efficiency in the cooling of the tuyère and tuyère coolers.

Tuyères and tuyère coolers produced by the casting method are further objectionable in that when they are produced in this manner a strain, commonly referred to as a casting strain, is set up within the metal itself as it cools out. By reason of this strain cast tuyères and tuyère coolers when subjected to the extreme heat incident to their use in a blast furnace have been found to check and thus produce cracks which will leak the cooling water into the furnace.

The present improved tuyères and tuyère coolers by reason of the novel method of producing them overcome the foregoing objection by reason of the fact that no heating of the metal is required in their production and no metal strain similar to the casting strain before referred to is produced and constantly there is no checking or cracking of the articles.

When these articles are produced by the casting method the finished product is full of pores, as is always the case in a cast metal article, and these pores require filling. The present invention produces the articles in a manner whereby the small particles of metal of which the finished articles are composed are deposited in overlapping relationship to one another with the result that there are no pores requiring filling.

In the production of these articles by the casting method a sand or similar core is required inasmuch as the articles are hollow and the result is that there is foreign matter in the tuyères and coolers which tend to hinder the flow of water and to retard the heat transfer efficiency of the devices. The present invention eliminates this

undesirable feature found in tuyères and tuyère coolers as now made.

Additionally it has been found that there are certain metals particularly desirable for the formation of tuyères and tuyère coolers in that they give to these articles a longer life by reason of the fact that these metals are more resistant to the chemical and thermal influences to which the tuyères and coolers are subjected when in use. One metal found particularly desirable for use in copper. Admittedly cast copper tuyères and coolers can be produced but those familiar with casting will recognize that a pure copper tuyère and cooler cannot be cast and that the resulting product is therefore inferior by reason of the presence of the impurity and because of the other reasons hereinbefore recited in respect to heat transfer, casting strain, smoothness of surface, presence of pores and necessity for the use of sand cores.

The present invention contemplates the formation of tuyères and tuyère coolers in their entirety composed of any metal or metal alloy that can be deposited by electrodeposit.

The invention has as a further object the production in a simple and highly efficient yet comparatively cheap manner tuyères and tuyère coolers which have a longer life and greater efficiency than those now made in accordance with the present known practices and methods.

The accompanying drawings are illustrative of two specific methods which could be utilized in the formation of tuyères by electro-formation and inasmuch as the shape of tuyère coolers is so closely similar to that of the tuyères themselves illustration in the drawings of the same methods for the production of the coolers is considered unnecessary as those skilled in the art will readily recognize the application of the methods to the tuyère coolers.

Other objects and novel features of construction of the improved articles of manufacture and the methods of producing the same will appear in the following description when read in the light of the accompanying drawings.

In the drawings:

Figure 1 is a view, partly in vertical section, illustrating one method of producing an improved tuyère.

Figure 2 is a view, partly in vertical section, illustrating another method of producing an improved tuyère in accord with the present invention.

Figure 3 is a top plan view of Figure 2.

Figure 4 is a longitudinal sectional view through the finished tuyère.

From the description thus far given it will be understood that the tuyère or tuyère cooler can be made of any metal or alloy that is capable of being deposited electrolytically and although pure copper tuyères and tuyère coolers will be for the most part hereinafter referred to in that when they are made of this metal they have been found to have an exceedingly long life the invention is not to be understood as limited to the use of copper as a metal as good results have been obtained from tuyères and coolers made of bronze or other metal alloys.

Inasmuch as apparatus suitable for electrolytically depositing metal and the operation of said apparatus is well known, detailed description of this apparatus is unnecessary and to a large degree this apparatus is illustrated schematically in the drawings and will be described in detail only in connection with its specific application to the present improved methods.

Having reference now to Figure 1 of the drawings and utilizing similar reference numerals and characters to designate like parts, 1 is a metallic container having an open upper end across which is suitably suspended a support 2 upon which is mounted a motor 3 having a drive shaft 4 for rotating a metallic contact plate 5 which is rotatable above the plating solution 6 in said container.

A generator 7 is provided from which extends an electric conductor 8 for electrical connection such as at 9 to the upper end of the container. This conductor makes the container the anode of the apparatus.

Soluble anodes 10 are positioned up each side and across the bottom of the container and within the plating solution and their exact nature will be determined by the particular metal or alloy of which it is intended to compose the tuyère or cooler. These anodes are of course in electrical connection with the metallic container 1.

The contact plate 5 is electrically connected by a suitable conductor 15 with the generator 7.

The cathode of the apparatus is in the form of a core 11 which is of the identical shape and size of the interior of the tuyère it is intended to make. This core is made of a metal having a much lower melting point than that of which the tuyère or tuyère cooler is to be made so that upon completion of the forming of the tuyére or cooler said core may be readily melted and removed in a liquid state from the interior of the finished article.

The core need not necessarily be made of a metal but could be made of some other material having a low melting point and upon which the metal which is to form the finished article can be deposited.

This core or cathode 11 is suspended within the plating solution from the contact plate 5 and electrically connected thereto by a plurality of pins or stub shafts 12 which have their lower ends threadedly or otherwise suitably attached as at 13 to the upper end of the core. When the article is finished it together with the core can be readily detached from the pins or stub shafts 12 and the opening in the end of the tuyère or cooler formed by the pins or stub shafts will constitute the openings through which the water or other cooling solution is admitted to and discharged from the tuyère and tuyère cooler.

From the foregoing it will be understood that an electro-forming operation or cycle of operation is carried on by the electro-depositing apparatus with the result that the metal of which the soluble anodes are composed is deposited upon the core to form the tuyère, or tuyère cooler as the case may be. The tuyère formed by this electro-forming method is indicated at 14. In carrying out the method the motor 3 rotates the core cathode in the tank or container of plating solution and this operation is continued until an article having walls of the desired thickness has been obtained by electro-deposition. Thereupon the core with the electro-formed article on the outer side thereof is removed from the tank or container and the core melted and run out through the openings which were formed by the stub shafts or pins 12.

The resulting article is an improvement and decided advance over similar articles as now made in accordance with common and accepted

practices as heretofore known, as in the respects which have been heretofore pointed out.

In addition to having the attributes and advantages before mentioned the tuyère or tuyère cooler made by the present method will have a uniform wall thickness which has not been the case in respect to these articles when made by the casting method which is practically now universal in the production of devices of this character.

Having reference now to Figures 2 to 4 of the drawings which illustrate another manner by which the tuyère or tuyère cooler can be made by electro-forming, a lead or copper shell or form 15 is provided having an internal configuration identical to the external configuration of the tuyère or cooler. This shell has an open upper end 16 and at one side adjacent its upper end is provided with a metallic solution inlet 17 and at its opposite side with a solution outlet 18. The solution outlet 18 maintains the solution within the shell or form at the proper and desired level.

A motor 19 is supported upon the horizontal cross head 20 of a suitable frame or standard 21 and is provided with a shaft 22 which both supports and rotates a circular contact plate or ring 23 from which is suspended an insoluble anode 24 which like the shell or form 15 is circular in cross sectional configuration and extends substantially throughout the length, that is from top to bottom, of the shell 15. This anode has a shape or configuration similar to the internal shape or configuration of the shell or form 15 but of considerably reduced size so as to provide adequate room to be completely surrounded by the metallic solution 25 within which it rotates.

The plating or electro-forming apparatus generator 26 is electrically connected by a suitable conductor 27 to the contact plate 23 at a plurality of points 28.

The cathode in this instance is the metallic shell or form 15 and is electrically connected by a suitable conductor 29 to the generator 26.

In operation the insoluble anode is rotated around within the solution in the stationary shell 15 and the particular metal of which the tuyère or tuyère cooler is to be composed and which is in the plating solution is deposited to the required thickness on the inside of the shell to form a tuyère designated at 30. The anode 24 is insulated away from the solution above the point 31 so that the tuyère is of the proper length.

To provide for ease of removal of the ring anode 24 it is made in a plurality of segments which can be suitably secured together and for ease in removal of the finished article from the shell or form 15 the inner wall 32 of this shell is threadedly attached as at 33 to the base or bottom 34 of the shell. Removal of this inner wall 32 facilitates quick removal of the finished article after the multi-piece anode has been removed from the shell.

In the first method described the butt end of the tuyère or cooler was formed at the same time and integrally with the remaining part of the article, but in the present form the butt 35, see Figure 4 of the drawings, is made separately and thereafter suitably secured to the large end of the tuyère or cooler by welding or otherwise such as by screw threads 36 to close this end of the article. This butt is provided with the usual water inlet and outlet connections 37.

It will be obvious without necessity of drawings in illustration thereof that the butt end of the tuyère or cooler can be made by electro-forming the same should this prove the most desirable way of producing it. Inasmuch however as the butt end of these articles are exterior of the furnace and not subjected to the same conditions as the nose of the articles the characteristics of the butt are not so important.

In addition to the two foregoing described and illustrated methods there is a third method which could be utilized in producing my improved tuyère coolers. Due to the similarity to the illustrated methods no drawings are considered necessary to an understanding of the third method.

In the third method a starting shell is utilized. This shell can be produced in any suitable manner such as by stamping and will be composed of the metal of which the entire article is to be composed and will have the exact shape and dimension, except for reduced wall thickness, of the desired finished article. This shell will be extremely thin as otherwise not only would difficulty be encountered in stamping it out but the stamping operating would be extremely expensive due to the equipment necessary to its accomplishment. Upon this thin walled shell which is in the form and dimension of a tuyère or tuyère cooler, as the case may be, is electrolytically deposited the metal of which the finished article is to be composed and which is the same metal of which the form is composed. This deposit of the metal on the form could be accomplished in either of the two manners described and by using either of the apparatus illustrated in the drawings. The deposition of the metal would continue until the article has the necessary and desired wall thickness.

I claim:

The method of producing a blast furnace metallic tuyère comprising, providing a hollow shell having a closed lower end and an open upper end and having an interior contour identical to the exterior contour of the tuyère it is desired to produce with the exception of the butt end of said tuyère, positioning said shell with its open end upward and filling said shell and thereafter continuously circulating through said shell a plating solution having therein the metal of which the tuyère is to be composed, making said shell the cathode of an electrolytic deposition apparatus, positioning in said solution the anode of said deposition apparatus and making the exterior contour of said anode identical to the interior configuration of the tuyère to be produced, making said anode of a size to loosely fit the interior of said shell so that the anode is in spaced relationship to the bottom and side walls of the shell, rotating said anode around the interior of said shell continuously throughout the deposition operation, continuing the deposition operation until the interior of said shell is coated with metal having a thickness equal to the desired whole thickness of the tuyère being produced, then removing said tuyère from said shell, and thereafter closing the open end of the tuyère with a conventional butt having inlet and outlet openings which provide means for circulating a cooling medium through the hollow tuyère.

SADIE A. HARRIS.