(No Model.)

J. HEALY.

COUCH BOTTOM.

No. 590,522. Patented Sept. 21, 1897.

Fig. 1.

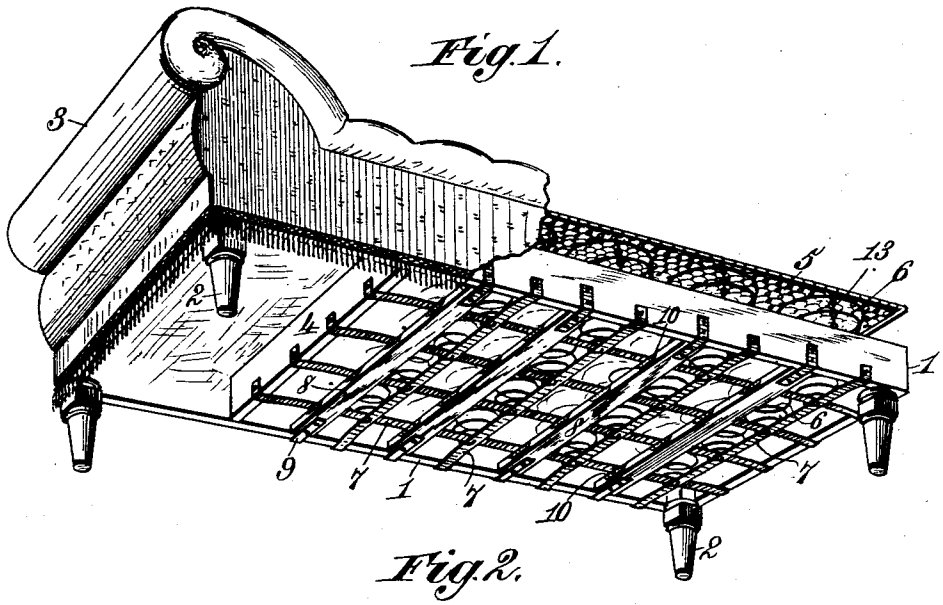

Fig. 2.

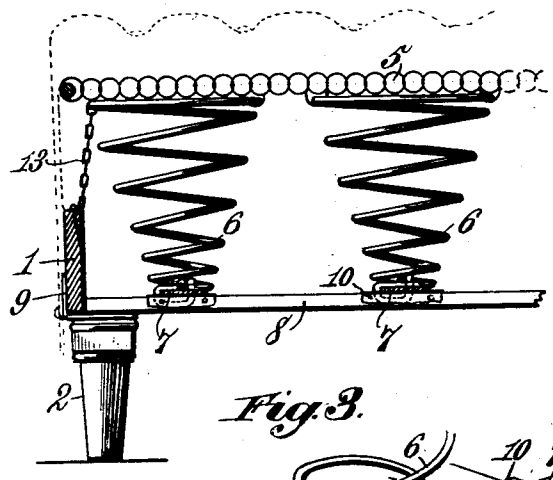

Fig. 3.

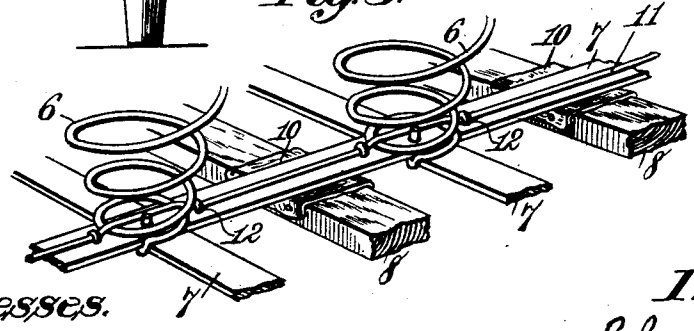

Witnesses.
Robt Eyatt.
Geo. M. Copenhaver.

Inventor.
John Healy
By Percy B. Hills
Atty.

THE NORRIS PETERS CO., PHOTO-LITHO., WASHINGTON, D. C.

UNITED STATES PATENT OFFICE.

JOHN HEALY, OF NEW YORK, N. Y.

COUCH-BOTTOM.

SPECIFICATION forming part of Letters Patent No. 590,522, dated September 21, 1897.

Application filed May 21, 1897. Serial No. 637,495. (No model.)

To all whom it may concern:

Be it known that I, JOHN HEALY, a citizen of the United States, residing at New York, in the county of New York and State of New York, have invented certain new and useful Improvements in Couch-Bottoms, of which the following is a specification.

My invention relates to spring-bottoms for couches and other similar articles, and has for its object, primarily, to provide certain improvements in the construction of the same whereby a spring edge will be afforded to a couch in which the spring-bottom is seated below the main frame, while at the same time novel provision is made for attaching and retaining said spring-bottom securely in position and for reinforcing the same by a series of transverse slats firmly but detachably fastened to the couch-frame.

Certain other novel features are also incorporated in my improved construction, as will be hereinafter more definitely pointed out, reference being had to the accompanying drawings, in which—

Figure 1 is a perspective view of a couch embodying my improved construction, the same being taken to show the under side of said couch and being partly broken away. Fig. 2 is an enlarged vertical transverse sectional view of a portion of the couch. Fig. 3 is a detail perspective view of a portion of the spring-supporting strips and slats.

In the said drawings, the numeral 1 denotes the main frame of the couch, supported on the usual legs 2, attached thereto. In a couch having a bolster 3 formed at one end, as shown in Fig. 1, it is not necessary that the spring-bottom extend beneath said bolster, and I have therefore shown a vertical partition-piece 4, extending transversely of the couch-frame 1 and affording an attaching means for the spring-bottom at that end, though it will be understood that in couches omitting the bolster 3 the spring-bottom extends the extreme length of the same. The said spring-bottom consists of the woven-wire top 5, into the mesh of which are engaged the upper larger ends of the conical spiral springs 6, the lower smaller ends of said springs passing under the meeting points of a series of longitudinal and transverse metallic strips 7 and having their ends passed up through holes in said strips, thereby forming a means of connection between said springs and strips, and thus firmly holding the woven-wire top, the springs, and the strips together, the whole constituting an article of manufacture adapted to be transported by itself and fastened into any suitable couch-frame. This attachment to the couch-frame is accomplished by passing the free ends of the strips 7 beneath the lower edges of the couch-frame 1 and bending the same upward against the outer sides of said frame, where they are fastened into place by one or more suitable nails or screws, as shown in Fig. 1. In order to strengthen said spring-bottom, I employ a series of transverse slats 8, extending across the couch-frame beneath and separate from the spring-bottom, the same being supported in position by the angle-irons 9, also fastened to the outer sides of the couch-frame, as shown. It is preferred that said slats 8 be located between the transverse strips 7 and away from beneath the spiral springs 6, in order that the resiliency of the spring-bottom may not be impaired.

At the points where the transverse strips 7 rest on the slats 8 I provide on the upper sides of said slats pieces of fabric or other suitable soft material 10 to prevent any noise being made by the impact of said strips on said slats when the couch is occupied. Further, in order to prevent any rattling between the lower ends of the springs 6 and the strips 7, I provide on the upper longitudinal strips pieces of wire 11, the same passing over the lower coils of said springs and being clipped to said strips on each side of said coils by suitable U-shaped fasteners 12, passing through the strips 7 and upset or riveted, as shown in Fig. 3, or, if desired, said wire 11 may be dispensed with and the lower coils of said springs held against the strips 7 by the fasteners 12 straddling said coils and engaging with the strips, as described.

The outer series of springs are attached to the couch-frame by stays 13 in order to prevent undue jumping of said springs and a consequent tearing of the upholstery.

The spring-bottom being thus fastened in position, the upper surface and sides of the couch may be upholstered in the usual manner, as shown in Fig. 1 and in dotted lines in Fig. 2.

It will thus be seen that by employing the conical springs 6 with their larger ends upward I provide a spring-support for the top 5 that extends substantially to the edge of said top, thus affording a spring edge for a couch in which the spring-bottom is supported within and below the top of the main frame 1 of the couch, this construction at the same time enabling me to reduce to a minimum the lateral swaying of said springs through the medium of the stays 13, it being apparent that the efficiency of said stays will be materially increased by reason of the fact that the distance between their points of connection with the couch-frame and springs is materially reduced.

With the above-described construction I provide a noiseless couch-bottom of relatively great resiliency that may be quickly and firmly attached in position and which will readily withstand severe usage.

While I have shown and described my improved construction as more particularly applied to a couch, I do not desire to confine myself to its use as such, as the same is equally well adapted for use in structures of an analogous character—such as chairs, bedsteads, and similar articles of furniture.

Having thus described my invention, what I claim as new, and desire to secure by Letters Patent, is—

1. The combination with a couch-frame, of a spring-bottom therefor consisting of a top, a series of spiral conical springs supporting said top and extending to substantially the edge thereof, and a series of longitudinal and transverse metallic strips supporting said springs, the free ends of the same passing beneath the lower edge of the couch-frame and bent upward against the outer side of said couch-frame and attached thereto.

2. The combination with a couch-frame, of a spring-bottom therefor consisting of a top, a series of springs supporting said top, and a series of longitudinal and transverse metallic strips supporting said springs, the free ends of the same passing beneath the lower edge of the couch-frame and bent upward against the outer side of said couch-frame and attached thereto.

3. The combination with a couch-frame, and a spring-bottom consisting of a top surface therefor, spiral springs engaged with said top, and longitudinal and transverse metallic strips having the lower ends of said springs connected thereto at their intersecting points, the free ends of said strips being fastened to said couch-frame, of a series of transverse strengthening-slats fastened to the couch-frame and located beneath the spring-bottom at points intermediate the lower ends of the spiral springs thereof.

4. The combination with a couch-frame, and a spring-bottom consisting of a top surface therefor, spiral springs engaged with said top, and longitudinal and transverse metallic strips having the lower ends of said springs connected thereto at their intersecting points, the free ends of said strips being fastened to said couch-frame, of a series of transverse strengthening-slats located beneath the spring-bottom at points intermediate the lower ends of the spiral springs thereof, and angle-irons supporting said slats and attached to the couch-frame.

In testimony whereof I have hereunto affixed my hand in the presence of two subscribing witnesses.

JOHN HEALY.

Witnesses:
HENRY BRICE,
JOEL L. ISAACS.