July 9, 1929. C. L. IPSEN ET AL 1,719,888

ELECTRIC FURNACE

Filed Oct. 10, 1925

Fig. 1.

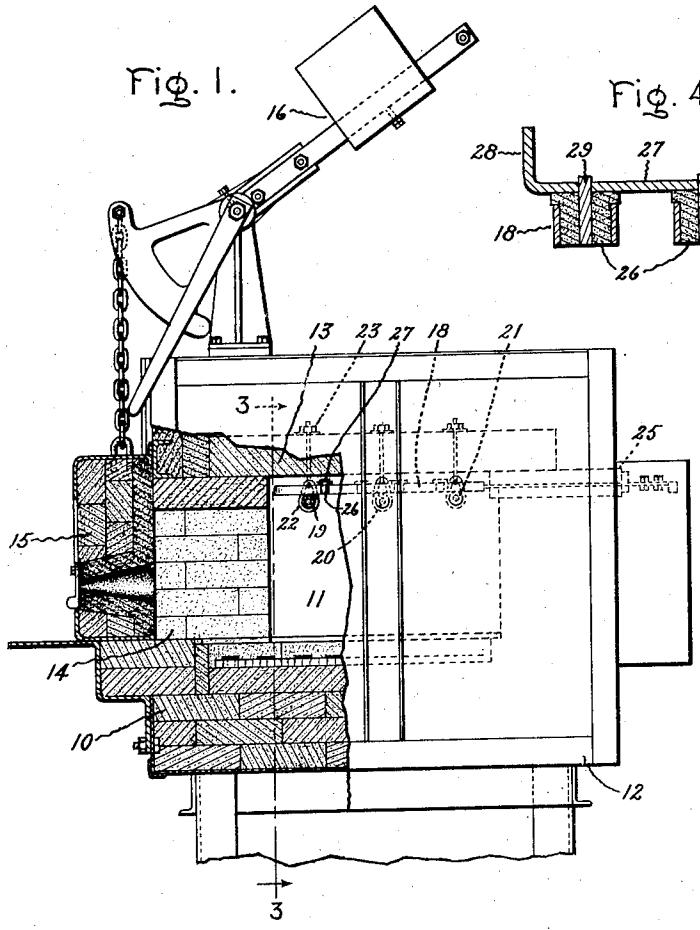

Fig. 4.

Fig. 2.

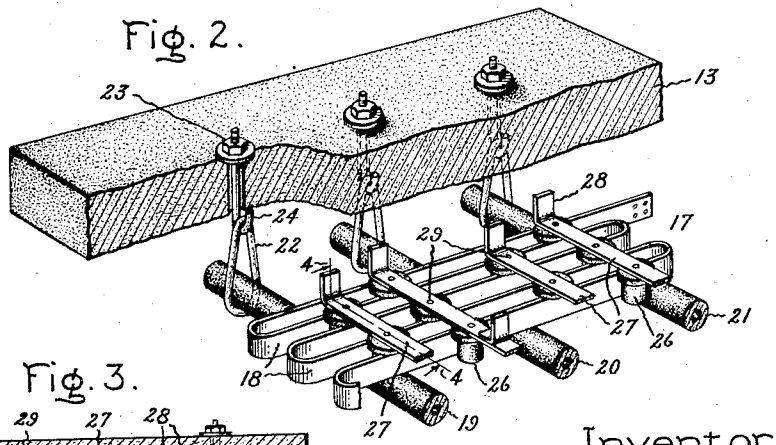

Fig. 3.

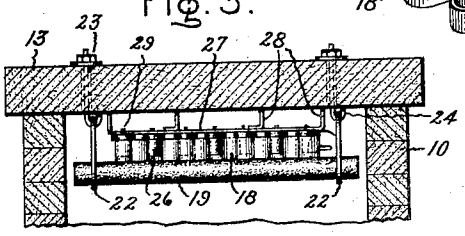

Inventors:
Carl L. Ipsen,
Albert N. Otis,

by Alexander S. Lunt
Their Attorney.

Patented July 9, 1929. 1,719,888

UNITED STATES PATENT OFFICE.

CARL L. IPSEN AND ALBERT N. OTIS, OF SCHENECTADY, NEW YORK, ASSIGNOR TO GENERAL ELECTRIC COMPANY, A CORPORATION OF NEW YORK.

ELECTRIC FURNACE.

Application filed October 10, 1925. Serial No. 61,769.

This invention relates to electric furnaces, more particularly to electric furnaces provided with heating means of the resistor type, and has for its object the provision of simple and reliable means for supporting the resistor in such manner that heat is radiated directly therefrom into the furnace chamber.

This invention relates more specifically to means for supporting resistors of substantially horizontal configuration in the top of the heating chamber, and for spacing the convolutions thereof. Such a resistor is described and claimed in Patent No. 1,432,442 to Collins dated October 17, 1922. In the Collins patent the resistor has sufficient rigidity to be substantially self supporting at intermediate points and rests at its edges on ledges in the side walls of the furnace, the resistor thus extending across the top of the furnace chamber. Our invention has particular application to furnaces of such relatively great width as compared with the rigidity of the resistor that it would be impracticable to use the arrangement of the Collins patent.

In carrying out our invention in our form, we provide means for supporting the resistor at a plurality of points comprising a plurality of bars hanging from the roof of the heating chamber on which the resistor is slidably mounted, the bars being spaced apart at suitable distances so that the resistor is self supporting between the bars. We also provide cylindrical spacing insulators for the resistor.

For a more complete understanding of our invention reference should be had to the accompanying drawing in which Fig. 1 is a side elevation partially in section of an electric furnace embodying our invention; Fig. 2 is an enlarged fragmentary view showing details of the support for the resistor, Fig. 3 is a fragmentary sectional view along the line 3—3 of Fig. 1 looking in the direction of the arrows, while Fig. 4 is an enlarged sectional view along the line 4—4 of Fig. 2 looking in the direction of the arrows.

Referring to the drawing, we have shown our invention in one form as applied to an electric furnace built up of suitable heat refractory bricks 10 which define a heating chamber 11. The bricks are preferably surrounded by a metallic protective casing 12. As shown the chamber 11 is substantially rectangular in cross section, the top or roof being formed by a large slab 13 of heat refractory material. An opening 14 is provided at one end through which the furnace can be charged, this opening being normally closed when the furnace is in operation by means of a door 15 which is adapted to be lifted from in front of the furnace opening. Suitable counterweight mechanism 16 is provided to facilitate the raising and lowering of the door.

The heating means for the furnace comprises a ribbon-shaped resistor 17 which is bent into a series of substantially parallel lengths or convolutions extending from side to side of the heating chamber. As shown the parallel lengths 18 extend from front to back of the heating chamber, the front being designated by the charging opening 14. The series of parallel lengths form a substantially flat resistor which is coextensive with the greater part of the top or roof area of the heating chamber.

The resistor is supported in the top of the furnace chamber on a plurality of cylindrical bars extending across the furnace chamber, three bars, 19, 20 and 21 being shown. These bars are hung from the roof of the heating chamber in substantially horizontal positions, and also in substantially parallel relation. As shown, the bars are supported at their ends only by means of metallic loops 22 through which the bars are slipped, one loop being provided at each end of the bars. These loops 22 are secured to the slab 13 by means of bolts 23 passing through the slab and having hooks 24 on their lower ends which interlink with the loops. The bars are, furthermore, arranged in substantially horizontal plane. They are made of a suitable heat refractory electrically insulating material such, for example, as a mixture of aluminum oxide and refractory clay. As shown the bars are tubular.

The resistor 17 rests on the bars 19, 20 and 21, in slidable relation therewith, and is thus upheld adjacent but spaced from the roof of the furnace chamber. The lengths 18 of the resistor are arranged in substantially the same plane and rest evenly on the bars. Furthermore the resistor ribbon is bent so that the convolutions or lengths 18 are edgewise with respect to the supporting bars, i. e., the greatest dimension of the ribbon is arranged

in a vertical direction. This gives the resistor the greatest possible rigidity and makes it self supporting between the bars. The ends of the resistor are situated at the back of the heating chamber, and are brought out through the wall of the furnace and provided with suitable connectors whereby the resistor can be connected to a suitable electrical supply source. Suitable bushings 25 are provided in the furnace wall through which the ends of the resistor extend.

As thus supported it will be observed that the resistor is free to slide on the bars and is thus free to expand and contract independently of its supports. The resistor also is mounted directly in the heating chamber and radiates heat thereto with only the very slight obstruction offered by the supporting bars. The resistor is, furthermore, easily put in place and removed. In applying the resistor, it is inserted through the opening 14 and put in place, the ends being slipped through the bushings 25, after which the rods 19, 20 and 21 are slipped through the loops 22 to secure the resistor.

Spacing means for the lengths 18 of the resistor is also provided. This spacing means consists of a plurality of cylindrical insulators or insulating spools 26 which are placed between the lengths 18. These insulators are made of suitable heat refractory material, such as a mixture of alumium oxide and refractory clay. They are in turn spaced by metallic strips 27 which extend crosswise of the lengths 18 and have their ends bent upward. These upwardly turned ends of the strips 27 together with intermediate upturned portions secured to the bars form projections 28 engaging the slab 13 whereby the strips are secured in an upward direction and the insulators prevented from working upward from between the lengths 18. The insulators are provided with heads or flanges at the top, as shown in the drawing, which rest on the upper edges of the lengths 18, whereby the insulators are supported on the lengths 18. Two spacing insulators may conveniently be provided between adjacent lengths 18, the insulators being arranged near the ends of the lengths. As shown in Fig. 4, the insulators 26, which are provided with central apertures, are slipped on pins 29 secured to the metallic strips 27. The insulators are thereby spaced by the bars 27 transversely of the lengths of the resistor, and are prevented by the strips 27 from working upward, as previously described.

The cylindrical insulators 26 form very efficient spacing means for the lengths of the resistor. Since the surfaces of the insulators in engagement with the sides of the resistor are cylindrical, it will be observed that a very small area of contact is made, this contact being defined by a line. This small area of contact offers but a very small muffling effect to the radiation of heat from the resistor and consequently there is no appreciable tendency for the resistor to overheat in spots due to the muffling effects of parts in engagement with it. This is also true of the supporting bars 19, 20 and 21 which are likewise cylindrical. The spacing insulators are also so arranged that the side of the resistor ribbon opposite the insulator is entirely free to radiate heat, the insulators engaging with the opposite side of the ribbon being spaced along its length somewhat. The spacing insulators may be put in place and temporarily secured, for example, by tying them with twine before the resistor is inserted in the furnace chamber, the twine or other tying material being burned away when the resistor is being heated.

While we have described our invention as embodied in concrete form and as operating in a specific manner in accordance with the provisions of the patent statutes, it should be understood that we do not limit our invention thereto, since various modifications thereof will suggest themselves to those skilled in the art without departing from the spirit of our invention, the scope of which is set forth in the annexed claims.

What we claim as new and desire to secure by Letters Patent of the United States is:

1. An electric furnace comprising refractory walls forming a furnace chamber, bars of refractory insulating material extending horizontally across said chamber, supports for said bars secured to the roof of said chamber, and a substantially flat sinuous resistor resting horizontally on said bars adjacent the roof of said chamber, said bars being shaped to provide relatively small areas of contact between the resistor and the bars and said resistor being coextensive with a substantial portion of said roof.

2. An electric furnace comprising refractory walls forming a furnace chamber, bars of refractory insulating material hung from the roof of said chamber, and a sinuous resistor slidably mounted on said bars.

3 An electric furnace comprising refractory walls forming a furnace chamber, bars of refractory material extending across and suspended from the roof of said chamber, and a resistor ribbon slidably mounted on said bars, said resistor ribbon being shaped into a plurality of substantially parallel edgewise lengths extending transversely of said bars.

4. An electric furnace comprising heat refractory walls forming a furnace chamber, rods of refractory insulating material hung in substantially horizontal positions from the roof of said chamber, and a flat sinuous

heating resistor resting on said rods so as to be supported thereby.

5. An electric furnace comprising heat refractory walls forming a furnace chamber, bars of refractory insulating material hung in substantially horizontal positions from the roof of said chamber, and a ribbon-shaped resistor slidably mounted on said bars, said resistor being bent into a plurality of edgewise convolutions passing across said chamber.

6. An electric furnace comprising refractory walls forming a heating chamber, rods of refractory insulating material, means for removably supporting said rods from the roof of said chamber, and a sinuous heating resistor supported on said rods.

7. An electric furnace comprising refractory walls forming a heating chamber, bars of refractory insulating material, looped supporting members secured to the roof of said chamber through which said bars are inserted so as to be supported thereby adjacent the roof of said chamber, and a flat sinuous resistor slidably mounted on said bars, said resistor being formed into a plurality of self-supporting lengths extending transversely of said bars.

8. An electric furnace comprising refractory walls forming a heating chamber, a ribbon-shaped resistor in said heating chamber formed into a plurality of substantially parallel lengths, and cylindrical spacing insulators arranged between said lengths and supported thereby in engagement with the sides and edges of said resistor ribbon, serving to hold said resistor ribbon spaced from one of said walls.

9. An electric furnace comprising refractory walls forming a heating chamber, a resistor mounted in said heating chamber formed into a plurality of substantially edgewise lengths, cylindrical spacing insulators arranged between said lengths and supported thereby, and means for spacing said insulators trasversely of said lengths.

10. An electric furnace comprising refractory walls forming a heating chamber, a sinuous resistor mounted in said heating chamber adjacent the roof thereof, cylindrical spacing members between the convolutions of said resistor and supported thereby and spacing means for said members engaging said roof.

11. An electric furnace comprising refractory walls forming a heating chamber, a ribbon-shaped resistor formed into a plurality of substantially parallel edgewise lengths, means for supporting said resistor adjacent the roof of said heating chamber, cylindrical spacing insulators between said lengths, said insulators being provided with heads resting on said lengths whereby said insulators are supported, and spacing means for said insulators engaging the roof of said heating chamber.

12. An electric furnace comprising refractory walls forming a heating chamber, cylindrical bars of refractory material supported in said chamber, adjacent the roof thereof, a resistor ribbon mounted on said bars, said ribbon being shaped into a plurality of edgewise convolutions extending transversely of said bars, and cylindrical spacing insulators between the convolutions of said resistor.

13. An electric furnace comprising refractory walls forming a heating chamber, cylindrical bars of refractory material extending across said chamber adjacent the roof thereof, a resistor ribbon slidably mounted on said bars, said resistor ribbon being shaped into a plurality of substantially parallel edgewise lengths extending transversely of said bars, cylindrical spacing insulators between said lengths, said insulators being provided with heads resting on said lengths whereby said insulators are suported, and spacing means for said insulators engaging the roof of said heating chamber.

In witness whereof, we have hereunto set our hands this 8th day of October, 1925.

CARL L. IPSEN.
ALBERT N. OTIS.