June 16, 1959 J. A. RHEINSTROM 2,890,817

VALVE MEANS FOR PRESSURIZED CONTAINER

Filed Sept. 6, 1956

FIG. 1.

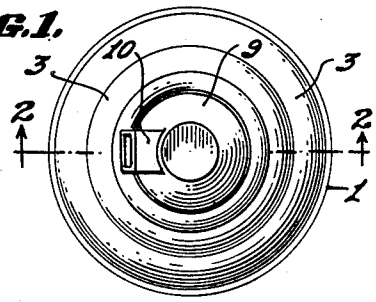

FIG. 2.

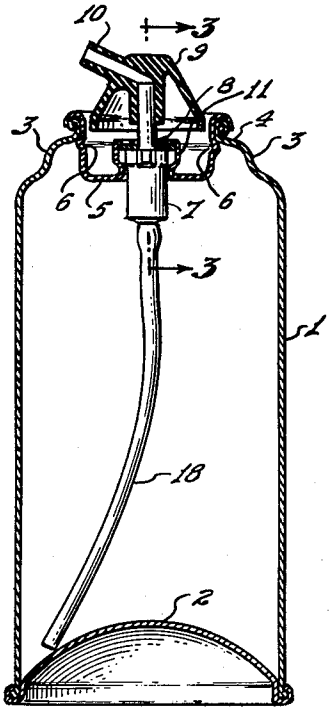

FIG. 4.

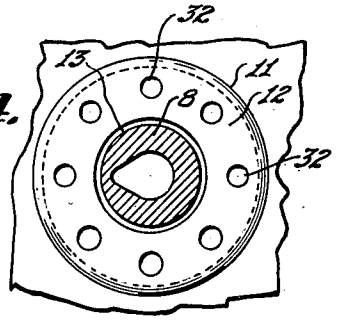

FIG. 3.

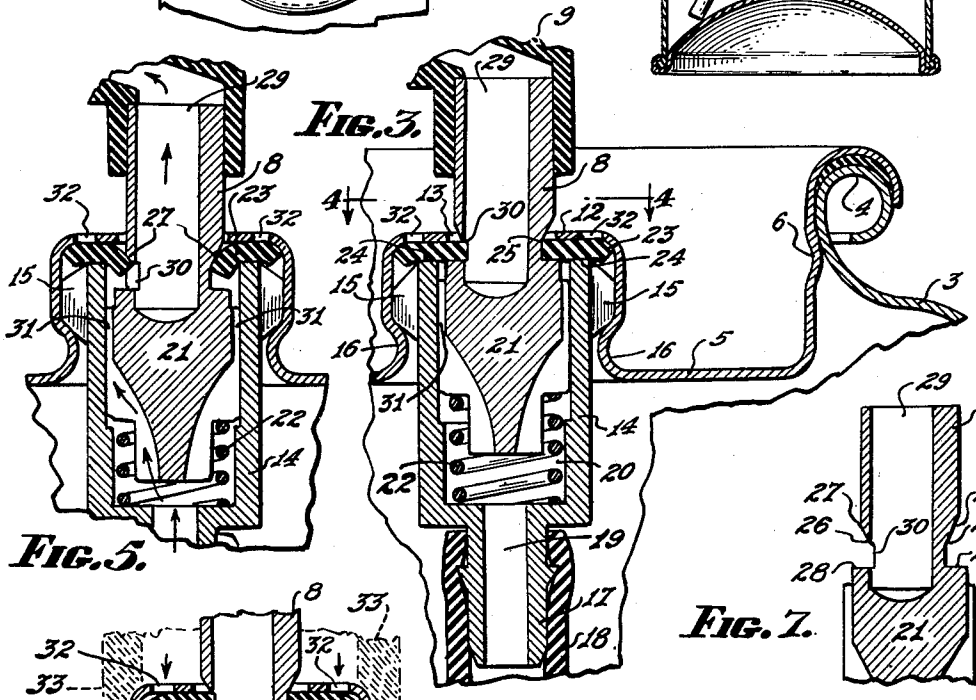

FIG. 5.

FIG. 7.

FIG. 6.

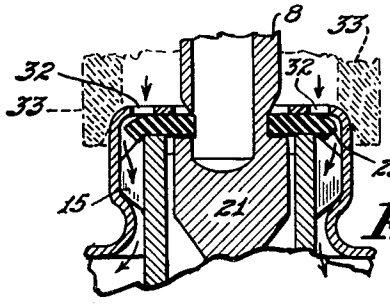

INVENTOR.
JAMES A. RHEINSTROM,
BY
Allen & Allen
ATTORNEYS.

United States Patent Office 2,890,817 Patented June 16, 1959

2,890,817

VALVE MEANS FOR PRESSURIZED CONTAINER

James A. Rheinstrom, Cincinnati, Ohio, assignor to The Karl Kiefer Machine Company, Cincinnati, Ohio, a corporation of Ohio

Application September 6, 1956, Serial No. 608,228

9 Claims. (Cl. 222—394)

My invention relates to pressurized containers of the type wherein a propellant gas is employed to dispense the contents of the container, the container being provided with a suitable discharge nozzle incorporating valve means effective to permit the discharge of the contents under the control of the user. In recent years such containers have come into widespread usage for dispensing diverse materials such as insecticides, paints and lacquers, whipped cream, shaving cream and the like.

In filling containers of this character, it is customary to first fill the containers with the desired contents through a relatively wide mouth at the top of the container, whereupon the mouth is closed by a cap which carries the valve and valve stem utilized to dispense the contents. Thereafter, the container is charged with the propellant gas, it being customary to introduce the gas through the same valve used for discharge of the contents. Since this valve is intended to limit the outward flow of the contents to a controlled stream or spray, it also is limiting to the speed at which the gas can be forced inwardly through the valve into the container, thereby materially increasing the time required to charge the containers.

It has hitherto been suggested that this difficulty could be overcome by refrigerating the contents and the gas, thereby permitting filling of the container prior to assembling the cap and valve to the container. This mode of operation has not been altogether successful in that a number of products which contain water cannot be refrigerated and, moreover, the cost of refrigeration equipment adds excessively to the cost of the filling operation.

It has also been suggested to seal the mouth of the container and then to fill with propellant gas with the discharge valve in position, but held away from the top of the container, the top of the container being covered by a suitable hood or the like. Subsequently, after the container has been charged, the valve is lowered into position and sealed. As can be appreciated, this is a complex and expensive procedure requiring precision equipment to lower and seal the valves in place while the container is maintained in a gaseous atmosphere.

In accordance with my invention I overcome these difficulties by providing an improved valve structure by means of which the containers may be quickly charged with the propellant gas subsequent to the placement of the valve and the sealing of the container mouth. To this end, I provide a valve structure incorporating a primary or dispensing valve and a secondary or charging valve by means of which the containers may be quickly charged with the propellant gas.

It is, therefore, a principal object of my invention to provide an improved valve structure for containers of the character described by means of which the containers may be rapidly charged with a propellant gas or the like.

A further object of my invention is the provision of an improved seal for a pressure container which incorporates the novel valve means in accordance with my

invention, the arrangement of parts being such that containers may be readily handled and rapidly filled in a simple and economical manner.

The foregoing, together with other objects of my invention which will appear hereinafter or which will be apparent to the skilled worker in the art upon reading these specifications, I accomplish by that construction and arrangement of parts of which I shall now describe an exemplary embodiment.

Reference is now made to the accompanying drawings wherein:

Figure 1 is a plan view of a pressure container in accordance with my invention.

Figure 2 is a vertical sectional view of a pressure container taken along the line 2—2 of Figure 1.

Figure 3 is an enlarged fragmentary sectional view taken along the line 3—3 of Figure 2.

Figure 4 is a horizontal sectional view taken along the line 4—4 of Figure 3.

Figure 5 is a partial vertical sectional view similar to Figure 3 but illustrating the valve in a first position of use.

Figure 6 is a vertical sectional view similar to Figure 5 but illustrating the valve in an alternate position of use.

Figure 7 is a fragmentary vertical sectional view of the valve element.

Referring first to Figures 1 and 2 of the drawings, I have therein illustrated a cylindrical container 1 of conventional character, the container having a dome-shaped bottom closure 2 crimped to the bottom edges of the cylindrical container in conventional manner. At its upper end the container tapers inwardly in shoulders 3 terminating in an upwardly opening mouth defined by the annular lip 4. The mouth of the container is closed by means of a cap 5 which is sealed against the annular lip 4, as by crimping the walls of the cap outwardly as at 6. The cap mounts a dispensing valve 7 having an upwardly projecting neck 8 to which an actuating button 9 is affixed, the actuating button having a projecting nozzle 10 through which the contents of the container are dispensed upon opening movement of the valve.

From the outset it is to be understood that the precise character of the container and its closure cap do not constitute a limitation upon my invention, and the container and cap arrangement herein described is exemplary only. The essence of my invention lies in the provision of a valve means incorporating primary and secondary valve elements, and it will be readily apparent to the skilled worker in the art that the subject of the invention may be readily adapted to other forms and types of dispensing containers.

Referring now to Figure 3, the cap 5 is provided at its center with an upwardly projecting annular turret 11 having a top wall 12 terminating centrally in a valve element opening 13. A valve body or stationary housing 14 is secured within the turret, and to this end the housing may be provided with projections 15 adapted to seat against the side wall portions of the turret, whereupon the lower extremities of these side wall portions may be crimped inwardly, as at 16, thereby securing the housing in place.

At its lower end the housing terminates in a coupling 17 which receives the dip tube 18, the dip tube projecting downwardly in the container to substantially the bottom thereof. The coupling has a vertical bore or passageway 19 opening upwardly into an enlarged bore 20 extending through the housing and of a size to slidably receive the valve element 21. A compression spring 22 is seated in the lower end of the bore 20 and arranged to normally bias the valve element upwardly toward the top wall 12 of the turret 11, the valve element being depressible against the compression of the spring.

A sealing ring 23, preferably formed from rubber, synthetic rubber or other flexibly resilient material, is seated against the under or inner surface of top wall 12 of the turret 11, the sealing ring being held against the wall 12 by means of the upper edges of valve body or housing 14. To this end, the upper end of the housing is of reduced dimensions so as to contact the sealing ring intermediate its inner and outer edges, such reduced areas being indicated at 24, thus providing free portions of the sealing ring extending both inwardly and outwardly of the valve housing. The sealing ring terminates inwardly in an opening 25 of a size to be snugly received in an annular recess 26 in the valve element, the recess having inclined shoulders 27 projecting upwardly therefrom, with the lower edges of the recess defined by the flat or straight shoulder 28. A passageway 29 extends downwardly through the upwardly projecting neck portion 8 of the valve element, the passageway terminating at or slightly below the annular recess. As best seen in Figure 7, the passageway 29 will preferably be formed off center with respect to the longitudinal axis of the valve element and hence will, at one side of the element, open into the recess 26, as at the opening 30. The size of the opening 30 will be dependent upon the desired rate of flow of the contents, but generally speaking it is of extremely small diameter although it has been enlarged somewhat in the drawing for clarity of illustration.

The portion of the valve mechanism just described constitutes the primary or discharge valve for discharging the contents from the container under pressure. Thus, as seen in Figure 5, when the valve element is displaced downwardly against the compression of the spring 22, the annular recess 26 in the valve element will move downwardly and the inclined shoulder 27 will act to deflect the inner edge portions of the sealing rings downwardly, as will be clearly apparent in Figure 5. This serves to displace the sealing ring from its seat against the shoulder 28 and bring the opening 30 into communication with the enlarged bore 20 of the valve housing. The pressurized contents of the container may then flow upwardly through the dip tube 18 into the bore 20 and thence along the longitudinal grooves 31 in the walls of the valve element so as to pass through the opening 30 and passageway 29 for discharge through the nozzle 10, the flow of the contents being indicated by the arrows in Figure 5. It will be understood that the contents will continue to flow until the valve element is released, whereupon the spring 22 will urge it upwardly, thereby returning the parts to the position illustrated in Figure 3 in which the opening 30 is effectively closed by the seating of the sealing ring against the shoulder of the valve element.

In accordance with my invention, the sealing ring 23 also serves as the valve element for the secondary or charging valve means. To this end, the top wall 12 of the turret is provided with one or more radially disposed openings or ports 32 arranged to open into the turret 11 but lying to the outside of the valve housing 14. Normally the sealing ring will be pressed into sealing engagement against the ports 32, as will be apparent from Figures 3 and 5 of the drawings. However, during charging of the container with the pressurized propellant gas, the gas pressure when exerted through the openings 32 will deflect the outer edges of the sealing ring downwardly, as illustrated in Figure 6, thereby permitting the gas to flow downwardly about the periphery of the turret into the container body, again as illustrated by the arrows in Figure 6. It will be understood that a suitable bell or sealing member 33 forming a part of the gassing mechanism will fit down over the upper end of the valve body and will make sealing contact with the outer edges of the turret, in the manner shown in Figure 6. Thus the gas under pressure may be fed into the bell and forced downwardly through the ports 32. When the desired amount of gas has been introduced into the container, the gas supply will be cut off and the bell or sealing member vented (which may be conveniently done by breaking the seal between the bell and the turret) whereupon the pressure of the gas within the container will exert itself against the outer edges of the sealing ring so as to press the ring tightly against the top wall of the turret and hence seal the ports 32. Thereafter, the charged contents may be discharged in the manner already explained by depressing the valve element 21.

It should be apparent from the foregoing that the port 32 will permit the rapid introduction of the gas into the container, the ports in effect providing a filling orifice many times the size of the discharge orifice 30. It may be observed, however, that the numbers of ports employed does not constitute a limitation on my invention and the number may vary from a single port to as many as may be conveniently disposed about the outer portion of the sealing ring. The primary objective is to provide one or more ports having an effective filling orifice larger than the discharge opening 30. In addition, both the ports 32 and the orifice 30 may be concurrently utilized to charge the container, if so desired. To this end, the bell 33 would be provided with a shoulder or other abutment effective, as the bell is seated against the turret, to depress the valve element 21, thereby permitting the gas to flow downwardly through the passageway 29 and opening 30. Similarly, it may be observed that for the filling of the containers with certain types of contents, particularly fluids, the cap and valve assembly may be sealed at the factory and the entire filling operation performed through the ports 32, the contents being first introduced followed by the introduction of the propellant gas, or both increments may be injected in a single operation where foaming is not encountered. It will be understood, of course, that the valve nozzle or actuating button 9 will be placed on the valve element subsequent to the filling operation and only the neck portion 8 of the valve element will be present beneath the bell 33.

Modifications may, of course, be made in my invention without departing from the spirit and purpose of it. Having, however, disclosed my invention in an exemplary embodiment, what I desire to secure and protect by Letters Patent is:

1. A valve means for pressurized containers, said valve means comprising a valve housing, a valve element in said housing, said valve element being movable from a closed to an open position, a sealing ring supported by said housing, said sealing ring having an inner portion thereof projecting inwardly for contact with said valve element and another portion thereof projecting outwardly beyond said housing, a wall overlying said sealing ring, said wall having an opening therein for the passage of said valve element, said housing serving to maintain an intermediate portion at least of said sealing ring in contact with said wall, a discharge opening in said valve element, said opening being normally closed by the inner surface of said sealing ring, said valve element being movable in said housing to deflect said sealing ring and expose said opening for the passage of contents therethrough, at least one port in the said wall spaced outwardly from said housing but in a position to be normally closed by the outer portion of said sealing ring, the said outer portion of said sealing ring being deflectable to open the said port to the passage of fluid under pressure therethrough.

2. The structure claimed in claim 1 wherein said wall forms a part of a cap for said container, and wherein said valve means is secured to said cap.

3. In a pressure container including a cap for sealing said container, said cap incorporating a discharge valve for dispensing the contents of said container, secondary valve means for introducing a propellant gas into said container, said secondary valve means comprising at least one port in said cap radially disposed with respect to said

discharge valve, a resilient sealing member underlying and normally closing said port, said resilient sealing member being deflectable downwardly to open said port to the flow of propellant gas therethrough upon the application of such gas under pressure to the external side of said port, and means maintaining said resilient sealing member in position to normally close said port.

4. The valve structure claimed in claim 3 wherein said last named means constitutes a part of said discharge valve.

5. The structure claimed in claim 4 wherein said cap includes an upwardly projecting turret having a top wall, wherein said discharge valve is mounted in said turret, and wherein said port is formed in the top wall of said turret.

6. The structure claimed in claim 5 wherein said discharge valve has a movable valve element including a discharge opening, and wherein said discharge opening is normally closed by said sealing member.

7. The structure claimed in claim 6 wherein said sealing member comprises a flexible sealing ring, and wherein the inner edge of said sealing ring is deflectable upon movement of said movable valve element to uncover said discharge opening.

8. In a valve assembly for the purposes described, valve mounting means including a wall having an opening therein, a valve housing supported by said valve

mounting means, a valve element movably mounted in said valve housing, said valve element having a neck portion projecting through the opening in said wall, a discharge opening in said valve element, a flexible sealing ring supported by said housing for normally closing said discharge opening, a plurality of ports in said wall radially disposed with respect to the opening therein and spaced outwardly beyond said valve housing, said sealing ring projecting outwardly beyond said housing and positioned to normally close said ports, the outer portions of said sealing ring being deflectable under fluid pressure to open said ports to the flow of fluid pressure therethrough when said fluid pressure is applied to said ports from the side thereof opposite said sealing ring.

9. The structure claimed in claim 8 wherein said movable valve element is spring biased to a position in which the inner edge of said sealing ring closes said dispensing opening, said valve element being movable against said spring pressure to deflect the inner edge of said sealing ring and thereby uncover said dispensing opening.

References Cited in the file of this patent

UNITED STATES PATENTS

2,746,796	Germain	May 22, 1956
2,788,925	Ward	Apr. 16, 1957