April 26, 1949. H. Y. FISHER 2,468,052

SOLENOID WITH PLUNGER

Filed May 8, 1947 2 Sheets-Sheet 1

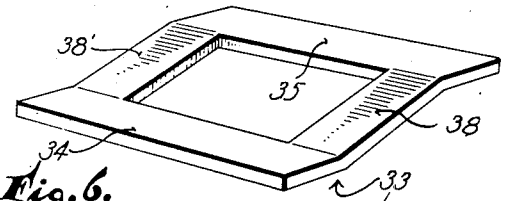


Fig. 6.

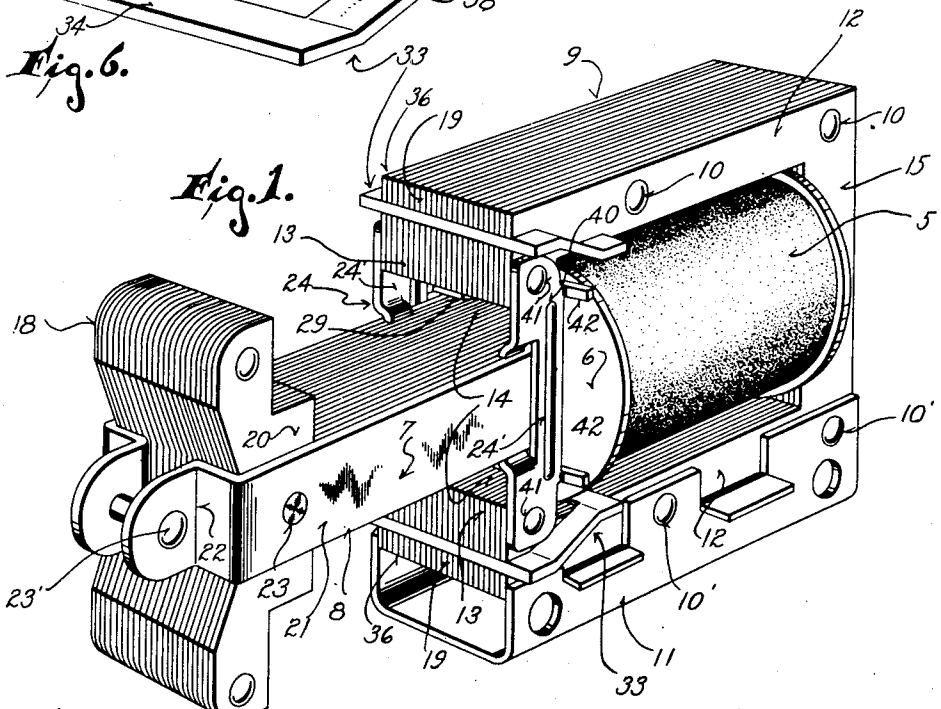


Fig. 1.

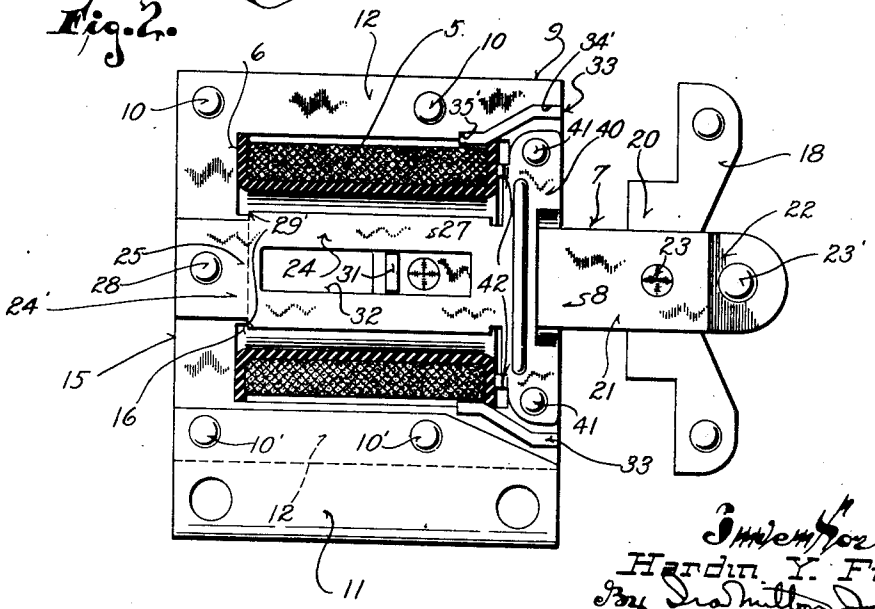


Fig. 2.

Inventor
Hardin Y. Fisher
By Sidney Sutton Jones
Attorney

April 26, 1949. H. Y. FISHER 2,468,052

SOLENOID WITH PLUNGER

Filed May 8, 1947 2 Sheets-Sheet 2

Fig. 3.

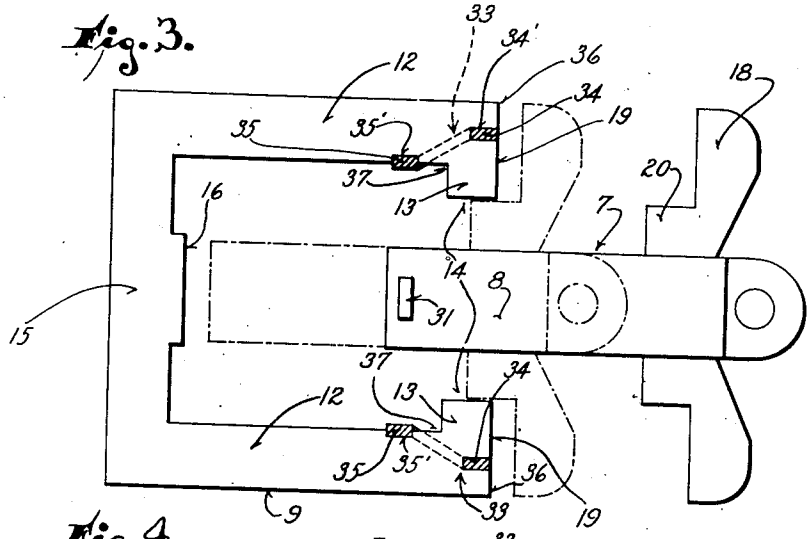


Fig. 4.

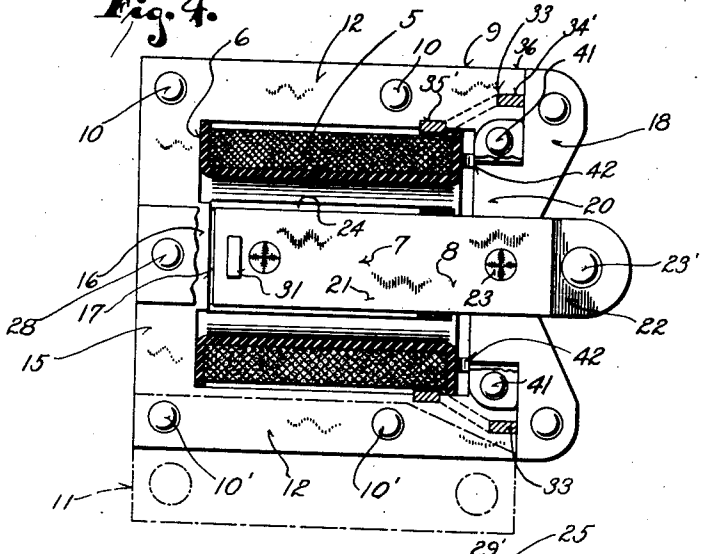


Fig. 5.

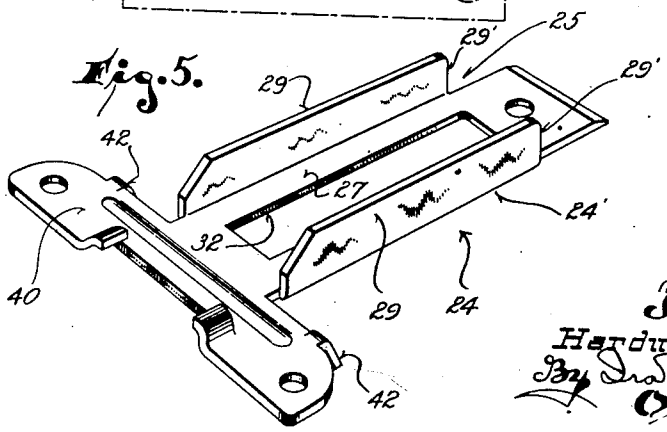


Inventor
Hardin Y. Fisher
By Ira Milton Jones
Attorney

Patented Apr. 26, 1949

2,468,052

# UNITED STATES PATENT OFFICE

2,468,052

## SOLENOID WITH PLUNGER

Hardin Y. Fisher, Melrose Park, Ill., assignor to Soreng Manufacturing Corporation, Chicago, Ill., a corporation of Illinois

Application May 8, 1947, Serial No. 746,648

11 Claims. (Cl. 175—338)

1

This invention relates to solenoids, and refers more particularly to improvements in alternating current solenoids.

In previous solenoids of the type having a C frame embracing the winding and a plunger reciprocable axially in the hollow center of the winding, test curves of tractive force of the plunger plotted against air gap show a marked dip in tractive force at the intermediate positions of the plunger.

More specifically, as the plunger was drawn into the winding from its withdrawn position, it exerted a constantly increasing tractive force through approximately the first one-third of its travel, while during approximately the second third of its travel, tractive force decreased slightly. The final movement of the plunger to seated position showed a marked increase in plunger pull due to the air gap pull being added to the solenoid pull, the maximum pull occurring, of course, just before seating of the plunger. Without a steel frame around the winding all tractive effort ceases when the respective magnetic centers of the winding and plunger coincide.

This condition results from the fact that the rate of change of inductance is much greater during the first portion of the plunger stroke than at the intermediate stages of the stroke.

This decrease in tractive force of past C frame solenoids at the intermediate stages of plunger travel is highly objectionable since it invariably occurs at instances when plunger pull is most needed.

This invention has as its prime object, the provision of a solenoid wherein the magnetic circuit is designed to insure a substantially uniformly increasing change of inductance throughout the range of plunger travel to thereby obtain constantly increasing tractive force by the plunger during its travel from withdrawn to fully seated positions.

In any solenoid, the work accomplished by movement of the plunger from a withdrawn to fully seated position is proportional to the total change of inductance brought about by the movement of the plunger in the coil. If the total change of inductance is low, the amount of work done is small, and vice versa, if the total change of inductance is high, the amount of work done is accordingly large.

Another objection to many past solenoids was that the inductance of their magnetic circuits was relatively high in the withdrawn position of their plungers, which condition limited the total change of inductance between the two positions

2

of the plunger and accordingly minimized the amount of work which was capable of being accomplished.

With this objection to past solenoids in mind, it is another object of this invention to provide a solenoid wherein the inductance is relatively low in the withdrawn position of its plunger to thereby assure a high total change in inductance between the two positions of the plunger and enable a larger amount of work to be done than was hitherto possible in solenoids of comparable size.

Former A. C. solenoids customarily had a shading coil or coils imbedded in the plunger, or in some instances in the frame, but usually the presence of the shading coil, and the fact that metal was cut away to accommodate it, resulted in a reduction in the cross sectional area of the portion embraced by the shading coil, in some instances by as much as 35 to 40 per cent, so that a flux bottleneck occurred at that point. This, in turn, resulted in a condition of flux saturation in the neighborhood of the shading coil. The presence of flux bottlenecks causes the coil to draw more current to overcome the same, and the additional current results in increased heating of the coil.

An additional disadvantage was incurred in many solenoid designs by placing the shading coil on the plunger stem, since the shading coil was then inside the winding so that heat was not readily dissipated from it.

It is therefore another object of this invention to provide an A. C. solenoid in which the shading coil is so located as to preclude the formation of a flux bottleneck in its neighborhood, and wherein the shading coil will be outside the winding and thus exposed for effective cooling.

A further object of this invention resides in the provision of an A. C. solenoid capable of being operated at high flux densities, and in which maximum flux density will occur in the stem of the plunger.

Still another object of this invention resides in the provision of a solenoid of the character described having an air gap in its main magnetic circuit to facilitate self-demagnetization of the solenoid, but which air gap will have a small reluctance so that the solenoid will operate at a high flux density.

With the above and other objects in view, which will appear as the description proceeds, this invention resides in the novel construction, combination and arrangement of parts substantially as hereinafter described and more particularly defined by the appended claims, it being under-

stood that such changes in the precise embodiment of the hereindisclosed invention may be made as come within the scope of the claims.

The accompanying drawings illustrate one complete example of the physical embodiment of the invention constructed according to the best mode so far devised for the practical application of the principles thereof, and in which:

Figure 1 is a perspective view of the solenoid of this invention;

Figure 2 is a side elevational view of the solenoid of this invention with portions thereof broken away;

Figure 3 is a somewhat diagrammatic side elevational view of the solenoid with the winding and plunger guide eliminated to show the relationship of the plunger to the solenoid frame;

Figure 4 is a side view of the frame and plunger of the solenoid shown in operative relation to one another;

Figure 5 is a perspective view of one of the pair of stampings which comprise the plunger guide; and

Figure 6 is a perspective view of one of the shading coils per se.

Referring now more particularly to the accompanying drawings, in which like numerals designate like parts throughout the several views, the numeral 5 designates generally a solenoid winding of conventional type wound on an insulating hollow spool or bobbin-like form 6. The plunger 7 for the solenoid has a relatively narrow stem 8 received inside the hollow of the spool for reciprocatory motion therein; and a magnetically permeable frame 9 embraces the winding to increase the efficiency of the solenoid.

The frame is preferably built up in the usual manner from a number of identical laminae held together by means of rivets 10 passing through aligned holes therein; and certain of these rivets 10' may also be used to secure a suitable mounting bracket 11 to the frame.

Each of the laminae is a substantially U-shaped stamping, the legs 12 of the U being parallel to the stem 8 of the plunger and straddling the winding to lie in a plane transverse to the turns thereof. Short inward extensions 13 on the outer ends of the legs, directed toward one another, overlie the front of the winding and define, between their ends, an air gap 14 which is considerably wider than the plunger stem 8.

On the inner side of the back 15 of the U-shaped frame is a small protrusion 16, which forms a plunger "stop." It should be noted that this "stop" is never actually engaged by the plunger stem since the latter is designed so that its inner end will stop somewhat short of the front surface of the "stop," thereby providing between the inner end of the plunger stem 8 and the frame an air gap 17 which facilitates demagnetization of the solenoid when the current supply to the winding is cut off. The width of the "stop" is somewhat greater than that of the plunger stem to increase the cross sectional area of this air gap and decrease its reluctance.

The plunger 7 is also preferably of laminated construction, the laminae of the plunger being equal in number to and lying parallel to those of the frame. The plunger laminae are substantially T-shaped, the stem of the T forming the plunger stem 8 and the cross member forming a head 18 substantially as wide as the frame. The inner or rear surface of the head which faces the front surfaces 19 of the short extension members 13 on the frame is adapted to abut the surfaces 19 when the plunger is in its fully retracted or seated position. Immediately behind the cross head and between the head and the narrow stem 8 is a second cross member or shoulder 20, considerably wider than the plunger stem and of a size and shape to substantially completely fill the air gap 14 between the extensions 13 on the frame when the plunger is in its seated position. The shoulder 20, projecting from opposite sides of the plunger stem gives the plunger, in effect, a double T-shaped configuration.

An elongated flat strip 21 having an inward offset 22 at its front end is secured to each side of the stack of plunger laminae by means of flush headed rivets 23, which also serve to hold the plunger laminae together, and a rivet 23' passing through aligned holes in the offset front portions enables the two strips together to serve as a pull bar through which the tractive force of the plunger is exerted.

The solenoid is also provided with a plunger guide 24 to receive and guide the plunger for reciprocatory motion within the winding spool. This guide is formed from a pair of substantially T-shaped stampings 24' of non-permeable material. The greater portion of the stem 25 of the two stampings is channel-shaped so that the two channels embrace the opposite sides of the plunger stem when the guides are disposed in side by side relationship inside the hollow of the spool for the winding with their flanges extending toward one another. It should be noted, however, that the guide fits rather snugly within the hollow center of the winding spool 6, and provides a sliding fit for the plunger stem to guide the same for substantially free reciprocating motion therein midway of the air gap 14.

The webs 27 of the channel-like stems of the cooperating guide stampings extend rearwardly out of the winding spool to overlie portions of the opposite sides of the back 15 of the frame and are secured to the frame by a rivet 28 passing through the frame laminae. The rear ends 29' of the flanges 29 of the channel-shaped stems on the guide abut the front surface of the "stop" 16, and it will be noted that the "stop" is the full width of the frame while having a length along the back 15 of the frame equal to the height of the webs 27 of the channels.

A lug 31 struck out from each of the pull bar strips near the extremity of the plunger stem rides in an elongated slot 32 in the adjacent web 27 of the guide and by striking the front end of the slot defines the limit of plunger travel in the "out" direction.

The cross member 40 of each guide T stamping is substantially flat and these cross members overlie the opposite sides of the extensions 13 at the front of the frame and are secured to the extensions by means of rivets 41 passing through aligned holes in the cross members and extensions so as to bridge the air gap defined therebetween.

Small rearwardly and outwardly directed resilient tangs 42, extending back from the rear edges of the cross members bear against the front end of the winding spool to hold the same against the back member 15 of the frame with the protrusion 16 located inside the hollow spool.

Each of the two shading coils 33 comprises a closed loop of conductive material imbedded in a pair of slots 34' and 35' normal to the plane of the frame laminae. One of these slots 34' extends edgewise into the front side of each short vertical frame member 13, and traverses the

front edges of the frame laminae near the outer corner 36 defined by the junction of the legs 12 of the frame with the adjacent vertical member 13; while the other slot 35' flatwise traverses the inner surface of the leg, near the inner corner 37 defined by said juncture. Hence it will be noted that the slots of each pair are parallel to one another, but spaced different distances from the inner extremities of the short frame members 13.

The shading coil itself may be formed from bar copper having a rectangular cross section and bent to form a rectangular loop having two opposite sides 34 and 35 thereof offset with respect to one another and imbedded in the slots 34' and 35' respectively, while the other two sides of the loop 38 and 38' extend diagonally between the extremities of the sides 34 and 35 exteriorly of the frame to facilitate cooling of the coil. The opposite sides 34 and 35, seating within their respective slots 34' and 35', retain the coil securely in position on the frame.

It will be seen that this disposition of the shading coils arranges them more or less diagonally across the front corners of the frame, so that the cross sectional area of the metal comprising the magnetic circuit is not materially reduced by metal cut away from the shading coil retention slots, as was the case with previous solenoid constructions. In consequence, there is no flux bottleneck at any point in the magnetic circuit of the solenoid of this invention, and the area of greatest flux density occurs throughout the length of the plunger stem, thus providing a highly efficient flux circuit.

In assembling the solenoid of this invention, the winding is passed sideways into the frame ahead of the stop 16 and then moved axially rearwardly to bring its hollow center over the stop, which serves to hold it centered. The two guide stampings 24' are held in place embracing the sides of the plunger, with the lugs 31 in the slots 32, and this temporary subassembly is inserted rearwardly into the hollow center of the winding until the shoulders 29' on the guide bottom on the "stop." Just before the guide bottoms on the "stop" 16, however, the tangs 42 on the guide elements will engage the front of the winding spool, so that further rearward movement of the subassembly into the coil causes the tangs to yield and thus firmly hold the coil against the rear of the frame. Securement of the rivets 28 and 41 then substantially completes the assembly of the solenoid.

Due to the novel double T shape of the plunger, it will be noted that, in the withdrawn position of the plunger seen in Figure 3, a large air gap is obtained between the plunger stem and the extremities of the legs 13. This air gap 14, prevents a large build up of inductance at the beginning of the plunger travel (into the coil) at which time in nearly all applications, less pull is actually needed than during the intermediate stages of the plunger travel. When the plunger approaches an intermediate position such as when the second cross head or shoulder 20 on the plunger approaches the air gap 14, the inductance of the magnetic circuit builds up more rapidly to thereby produce an increase in pull at the stages of plunger travel where formerly the pull decreased. Moreover, the increase in pull effected by the solenoid of this invention at the intermediate stage of plunger travel occurs at the point where the pull is most needed.

As the second cross head or shoulder 20 on the plunger enters the air gap 14, as seen in construction lines in Figure 3, the pull on the plunger is caused to increase further, and such increase in pull occurs right up to the seated position of the plunger, at which the inductance is maximum.



Hence, since the inductance was relatively low at the start of plunger travel (into the coil) it will be apparent that a relatively high total change of inductance is obtained, resulting in a large amount of work done by the plunger.

From the foregoing description, taken together with the accompanying drawings, it will be apparent to those skilled in the art that this invention provides an improved alternating current solenoid having no flux bottleneck in its magnetic circuit, and capable of being operated at higher flux densities for a given temperature rise; and wherein a strong pull is developed in the intermediate stages of plunger travel to assure adequate pull by the plunger when such pull is most needed.

I claim:

1. In a solenoid of the character described: a winding with a hollow center; a magnetically permeable plunger having an elongated stem portion adapted to reciprocate axially within the hollow center of the winding; a frame of magnetically permeable material embracing said winding and having an opening adjacent to one end of the winding and axially aligned with the hollow center thereof, said opening being substantially wider than the plunger stem to provide an air gap between the frame and the stem when the plunger is in a withdrawn position; a cross member on the plunger adapted to abut the frame on either side of said opening when the plunger is in its seated position; and an enlargement on the plunger stem under said cross member and in line with said air gap, said enlargement being of a size and shape to substantially fill the air gap when the plunger is in the seated position, and serving to reduce the reluctance of the flux circuit as the plunger approaches the seated position, thereby increasing the traction exerted by the plunger.

2. In an alternating current solenoid of the character described: a winding with a hollow center; a magnetically permeable plunger having an elongated stem portion adapted to reciprocate axially within the hollow center of the winding; a substantially U-shaped magnetically permeable frame embracing said winding with the legs of the U lying in a plane transverse to the plane of the turns of the winding; an inwardly directed extension at the free end of each leg of the U, substantially perpendicular thereto, said extensions defining between their opposed ends an air gap axially aligned with the hollow center of the winding and through which the plunger stem passes; a pair of shading coils, each comprising a loop of conductive material partially imbedded in slots in the frame so disposed that said loop passes substantially diagonally across a corner of the frame formed by the juncture of a leg of the U and the extension adjacent thereto, so that the combined cross sectional areas of the frame at the locations of the shading coils will not be less than the cross sectional area of the plunger stem thereby eliminating the possibility of a flux bottleneck in the magnetic circuit and assuring that the maximum flux density will be in the plunger stem; and a permeable cross member on the outer end of said plunger, adapted to abut said extensions on either side of the air gap when the plunger is in its seated position

and thus to lie within the localized flux fields of the shading coils.

3. The structure set forth in claim 2 further characterized by extensions on the legs of the U of such length as to provide a substantial space between the ends thereof and the stem of the plunger when the plunger is in its unseated position; and a shoulder on the plunger, immediately behind said cross member, and of a size and shape to substantially fill said space when the plunger is in the seated position.

4. The structure set forth in claim 2, further characterized by a permeable protrusion on the frame extending toward the inner end of the plunger stem but not in contact therewith when the plunger is in the seated position, said protrusion having a width greater than that of the plunger stem so as to increase the effective cross sectional area of the air gap between said protrusion and the plunger and thus decrease the reluctance of the magnetic circuit.

5. In an alternating current solenoid: a winding with a hollow center; an elongated plunger stem aligned with the axis of said winding and reciprocable in the hollow center thereof; a laminated frame embracing said winding with the planes of the laminae substantially transverse to the turns of the winding, each of said laminae comprising a U-shaped member having the winding received between the legs of the U, and short inward extensions on the outer ends of the legs, directed toward one another and overlying the outer end of the winding, said extensions defining between their ends an air gap aligned with the hollow center of the winding and substantially wider than the plunger stem; a pair of shading coils, each comprising a substantially rectangular loop of conductive material retained in position by having two opposite sides thereof imbedded in slots in the frame transverse to the plane of the laminae, one of said slots being adjacent to the outer corner defined by the juncture of each leg of the U and its inward extension and the other being adjacent to the inner corner defined by said juncture, the loop thus embracing substantially a diagonal corner of the frame so that the presence of the retaining slots for it does not create a flux bottleneck in the frame, the other two sides of the loop being exterior to the frame laminae to facilitate cooling; a cross member on the outer end of the plunger stem adapted to abut the extensions of the legs of the U when the plunger is in the seated position, so as to lie within the localized flux fields of the shading coils; and a shoulder behind said cross member comprising a widened portion of the plunger stem, of a size and shape to substantially fill the air gap between the ends of said extensions, for reducing the reluctance of the flux circuit as the plunger approaches the seated position, thereby increasing the traction exerted by the plunger.

6. The solenoid of claim 5 further characterized by a protrusion on the inner side of the cross member of the U of the frame laminae extending toward the plunger stem but not in contact with the inner end thereof when the same is seated so as to provide an air gap between the plunger stem and said protrusion, said protrusion having a greater width than the plunger stem to increase the effective cross sectional area of the air gap and thereby reduce the reluctance thereof.

7. In a solenoid of the character described: a winding with a hollow center; a plunger, the stem of which is reciprocable therein; a frame surrounding said winding and having an opening at one end of the winding aligned with the hollow center thereof, the plunger stem passing through said opening and into the interior of the winding for reciprocation therein, said opening being substantially wider than the plunger stem to provide an air gap between the frame and said stem when the plunger is in a withdrawn position; and widened portions on the sides of the plunger providing shoulders adapted to substantially fill said air gap when the plunger is in the seated position and so located along the length of the plunger as to increase the tractive force exerted by the plunger during the final portion of its travel to its seated position by entering the air gap and thereby decreasing the reluctance of the flux circuit.

8. In a solenoid of the character described: a winding with a hollow center; a plunger having an elongated stem reciprocable in the hollow center of the winding; a magnetically permeable frame embracing said winding, said frame having an opening at one end of the winding through which the plunger passes; an inward protrusion on the frame at the opposite end of the winding extending into the hollow center thereof a distance such that an air gap is provided between said protrusion and the inner end of the plunger stem when the plunger is in its seated position, the surface of said protrusion facing the end of the plunger having a greater area than the cross sectional area of the plunger stem so that the protrusion fits snugly within the coil and so that the reluctance of said air gap will be low; a substantially T-shaped guide for the plunger stem, of non-permeable material, the stem of said T forming substantially a tube snugly received within the hollow center of the coil and surrounding the plunger stem to guide the same during motion thereof, the base of said tube abutting said surface of the protrusion, and the cross member of said T being secured to the frame at the open end thereof; and tangs on said cross member extending rearwardly therefrom and bearing against the adjacent end of the winding to retain the same against axial motion with respect to the frame.

9. In a solenoid of the character described: a winding with a hollow center; a magnetically permeable frame embracing the winding and having an opening at one end of the winding, aligned with the hollow center thereof; and a plunger adapted to reciprocate axially with respect to the winding comprising, an intermediate portion of a size and shape to fill said opening when the plunger is in a seated position; an inner reduced portion projecting from said intermediate portion into the hollow interior of the winding, the sides of said reduced portion in the unseated position of the plunger being spaced a substantial distance from the sides of said opening, and an outer enlarged head, wider than the intermediate portion, and adapted to abut the frame at either side of said opening therein to define the seated position of the plunger.

10. In a solenoid of the character described: a winding with a hollow center; a plunger having an elongated stem reciprocable in the hollow center of the winding; a magnetically permeable frame adapted to embrace the winding and having short inward extensions defining an opening at the front end of the frame of a size permitting axial passage of the plunger stem therethrough

but precluding axial insertion of the winding into the frame; a permeable protrusion at the rear of the frame, opposite said opening, adapted to extend into the hollow center of the winding, toward the plunger stem, the distance between the surface of said protrusion facing the plunger stem and the inner surface of said extensions at the front end of the frame being no less than the axial length of the winding so as to permit sideways insertion of the winding into the frame, said surface of the protrusion having a greater area than the cross sectional area of the plunger stem so that the reluctance of the air gap between said protrusion and the plunger stem will be low and so that the protrusion fits snugly within the end of the winding to hold the same in place during assembly of the solenoid; a substantially T-shaped guide for the plunger stem, of non-permeable material, the stem of said T forming substantially a tube snugly received within the hollow center of the winding and surrounding the plunger stem to guide the same during motion thereof, the base of the stem having shoulders abutting said surface of the protrusion when the guide is in place, and the cross member of said T being secured to the front of the frame at either side of said opening therein; and tangs on the cross member of the guide extending rearwardly against the adjacent end of the winding to hold the same in place over said protrusion and retain it against axial displacement with respect to the frame.

11. In an alternating current solenoid of the character described: a winding with a hollow center; a magnetically permeable plunger having an elongated stem portion adapted to reciprocate



axially within the hollow center of the winding; a substantially U-shaped laminated frame embracing said winding with the legs of the U extending forwardly from the bottom of the U and lying in a plane transverse to the turns of the winding; an inwardly directed extension at the free end of each leg of the U, substantially perpendicular thereto and overlying the front of the winding, said extensions defining between their opposed ends an opening axially aligned with the hollow center of the winding and through which the plunger stem passes; and a pair of shading coils, each comprising a substantially rectangular loop of conductive material having two opposite sides received in slots in the frame normal to the planes of the frame laminae, one of said slots being adjacent to the inner corner defined by the juncture of each leg of the U and its inward extension and the other being in the front side edges of the laminae defining said extension but offset from the first mentioned slot lengthwise of said extension, said loop thus embracing a portion of the frame substantially diagonally with respect to the length of the extension so that the presence of the retaining slots for the loop does not create a flux bottleneck in the frame.

HARDIN Y. FISHER.


REFERENCES CITED

The following references are of record in the file of this patent:

UNITED STATES PATENTS

| Number | Name | Date |
|---|---|---|
| 2,305,415 | Goff | Dec. 15, 1942 |
| 2,360,744 | Van Valkenburg | Oct. 17, 1944 |