Dec. 15, 1964 W. T. ODUM ETAL 3,161,028

BUOYANCY ADJUSTING DEVICE FOR SWIMMERS

Filed June 13, 1961

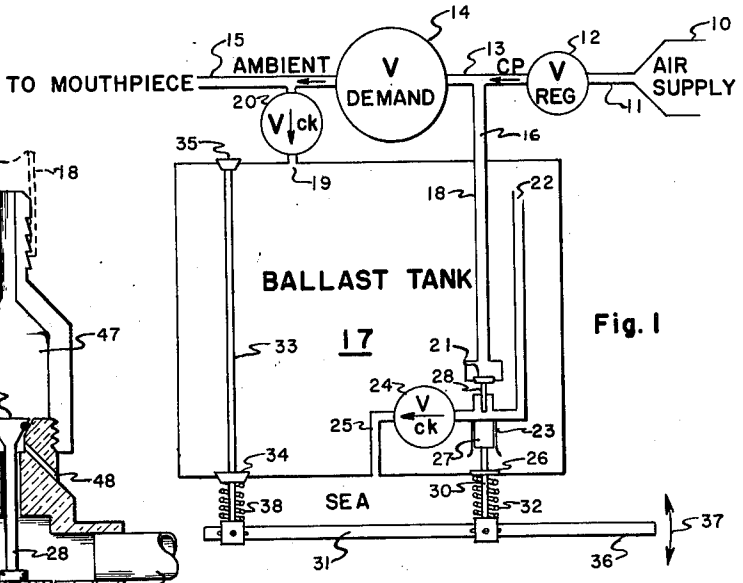

Fig. 1

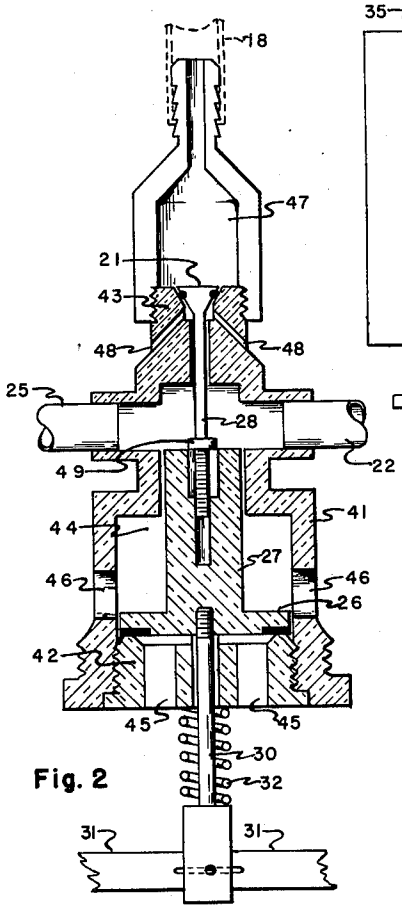

Fig. 2

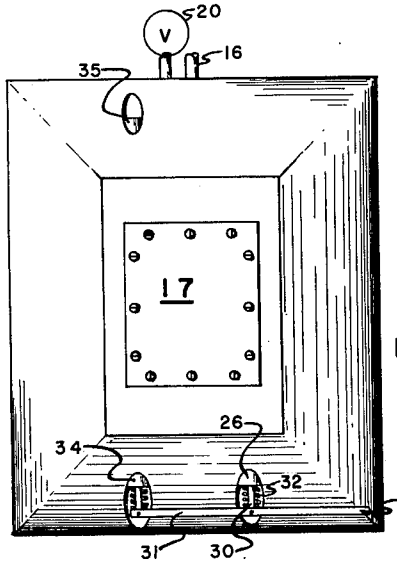

Fig. 3

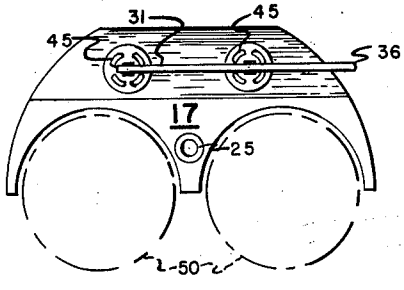

Fig. 4

William T. Odum
Robert H. Banks
James E. Preston
INVENTORS

BY

Rocco N. Carter
ATTORNEYS

United States Patent Office 3,161,028 Patented Dec. 15, 1964

3,161,028

BUOYANCY ADJUSTING DEVICE FOR SWIMMERS

William T. Odum, Robert H. Banks, and James E. Preston, all of Panama City, Fla., assignors to the United States of America as represented by the Secretary of the Navy

Filed June 13, 1961, Ser. No. 116,892
1 Claim. (Cl. 61—69)
(Granted under Title 35, U.S. Code (1952), sec. 266)

The invention described herein may be manufactured and used by or for the Government of the United States of America for governmental purposes without the payment of any royalities thereon or therefor.

The present invention relates to auxiliary equipment for swimmers and more particularly to a variable ballast tank to be worn by an underwater swimmer to enable him to regulate his buoyance at will.

An object of the invention is to provide for skin divers a device permitting them to have complete control of their buoyancy at all times and at all depths.

Another object of the invention is to provide an adjustable ballasting unit adapted to utilize a small portion of a diver's air supply for its functioning.

A further object of the invention is to provide a compact ballasting unit which is readily attachable to existing scuba equipment.

Other objects as well as advantages of the invention will become apparent to those skilled in the art from the following description of the accompanying drawing in which:

FIG. 1 is a schematic diagram of a preferred embodiment of the invention;

FIG. 2 is a sectional view of a valve assembly useful in practicing the invention;

FIG. 3 is a plan view of the ballast tank; and

FIG. 4 is an end view of the tank of FIG. 3 indicating its assembly with scuba air cylinders.

Prior to the present invention, it has been accepted practice by underwater swimmers to control their buoyancy by the use of weights attached to their belts and added or removed to attain the buoyancy desired. A swimmer having initially adjusted his buoyancy to the desired value experiences a gradual increase in buoyancy as the air in his tank or tanks is consumed, each tank when full having about 5 pounds of air so that when using two tanks their buoyancy increases about 10 pounds going from full to empty condition. Unless weights are supplied from the surface or located on the bottom, the swimmer would have to overballast himself initially with a resulting loss in efficient movement as in making a search. Also it is highly desirable for a swimmer to be able to adjust at will his buoyancy to adapt to changing situations, e.g., neutral when moving about, negative when working on the bottom and positive when bringing objects to the surface.

In accordance with a preferred embodiment of the present invention, the diver's air supply is utilized to adjust the buoyancy of a ballast tank by regulating the volume of water contained in the ballast tank under the control of a simple lever positioned at a point within convenient reach of the diver, such as just above hip-pocket position where it does not interfere with normal working movements. The ballast tank is connected to ambient pressure breathing air through a check valve which passes air into the tank only when the tank pressure is slightly below ambient and is connected to the sea through a standpipe and check valve which vents air to the sea only when the tank pressure is slightly above ambient whereby the demand on breathing air is minimized and the tank may be rigid without robust construction.

Also in accordance with the invention, a valve assembly actuated by the ballast control lever being moved in one direction functions in its initial travel to place the ballast tank in communication with the sea and to block off the standpipe and in its final travel to connect the tank to intermediate air pressure via the hooka attachment in the scuba pressure regulator. Movement of the ballast control lever in the opposite direction opens two valves to the sea, the valves being spaced vertically so that water entering through the lower valve will force air out through the upper valve.

A scuba (self-contained underwater breathing apparatus) equipment is schematically shown in FIG. 1 as comprising a cylinder 10 containing air under high pressure connected through a tube 11 to a constant pressure outlet valve 12 which reduces the pressure to an intermediate value, e.g., 110 p.s.i., in the tube 13 and fed through a demand valve 14 which reduces the pressure to ambient in its outlet conduit 15 leading to the mouthpiece (not shown) of the breathing apparatus, all in accordance with common practice. The tube 13 containing air at the intermediate constant pressure is tapped by a conduit 16, generally referred to as a hooka attachment, for optional use of an air supply directly from the surface when the swimmer does not wish to be burdened with the air cylinder 10. The adjustable buoyancy device according to the invention comprises a ballast tank 17, an inlet conduit 18 connected to the hooka attachment 16 and an inlet port 19 connected through a check valve 20 to the ambient pressure line 15. The conduit 18 is adapted to be placed in open communication with the ballast tank 17 by a poppet valve 21 normally held in closed position by the air pressure in the conduit 18. A standpipe 22, open at its upper end, is connected through a normally open port in a valve assembly 23 and a check valve 24 through a passageway 25 to the sea. Each of the check valves 20 and 24 maintain a small pressure differential, say 2 p.s.i., between their inlet and outlet ports, the arrangement being that while diving the air pressure within the tank 17 is maintained by the valve 20 at less than ambient pressure and when ascending the valve 24 maintains the air pressure in the tank 17 above ambient pressure whereby the tank 17 need be made sturdy enough only to withstand a pressure differential slightly greater than the differential maintained by the check valves 20 and 24. The valve assembly 23 contains a valve disc 26 movable to open the tank 17 to the sea and a piston 27 movable to block the standpipe 22 to prevent escape of the air from the tank 17 and adapted upon further movement to contact the stem 28 of the valve 21 to move it to open position to admit intermediate pressure air from the hooka attachment 16.

A rod 30 carrying the valve disc 26 and the valve piston 27 is pivotally connected to a ballast control lever 31 and biased by a spring 32 to the position shown with the valve disc 26 seated. One end of the control lever 31 is pivotally connected to a rod 33 which carries two valve discs 34 and 35 seated, respectively, in the lower and upper walls of the tank 17 while the distal end portion 36 of the lever 31 constitutes a handle which may be manually moved up or down as indicated by the double headed arrow 37. A spring 38 under compression between the tank 17 and lever 31 biases the valve discs 34 and 35 to closed position so that when the lever handle 36 is moved downwardly the lever 31 pivots about the end of the rod 30 to lift the valve discs 34 and 35 from their seats against the bias of the spring 32. It is noted that the control lever 31 should be slotted at one of its pivot points to allow for change of radius as the lever 31 is rotated about either pivot. The area of the valve disc 34 is preferably made larger than the area of the valve disc 35 because normally the water will enter through the valve 34 with the air exiting through the valve 35.

FIG. 2 shows the valve assembly 23 in section as comprising a housing 41 having a central bore in which two valve seats 42 and 43 coaxial with the bore and facing in the same direction are mounted. The valve disc 26 abuts against the valve seat 42 and the valve cone 21 abuts against the valve seat 43. The valve disc 26 separates a cavity 44 from outlet ports 45 open to the sea, the cavity 44 being in communication with the ballast tank 17 through orifices 46. The valve cone 21 separates a cavity 47 from ports 48 opening into the ballast tank 17, the cavity 47 being in communication with the tube 18 which connects to the intermediate pressure stage, i.e., the hooka attachment 16 shown in FIG. 1. The valve disc 26 has formed integral therewith the piston 27 which is adapted when moved upwardly, as by the action of the lever 31, to cut off communication between the standpipe 22 and the passageway 25 to the sea. This piston 27 has a central bore for receiving the stem 28 of the valve cone 21 to provide a loss motion coupling until an actuating shoulder 49 on the stem 28 is engaged by the piston 27 to unseat the valve cone 21. It will be evident that upon upward movement of the ballast control lever handle 36 the valve assembly 23 functions during its initial upward movement to open the ballast tank 17 to the sea through orifices 46 and the ports 45 and to close communication between the standpipe 22 and the passageway 25 to the sea and thereafter engages the actuating shoulder 49 to separate the valve cone 21 from its valve seat 43 to permit intermediate pressure air to enter the tank 17 and force out through the ports 45 a corresponding volume of water until such time as the lever 31 is released to again seat the valves 26 and 21.

While the apparatus of the invention is functionally indifferent to the shape, size and material used in construction of the ballast tank 17 it is evidently desirable that these and other parameters be chosen with the view of providing compactness, lightness in out-of-water weight, and at least some fairing to hold to a minimum the burden placed on the diver. The general configuration of the ballast tank 17 shown in FIGS. 3 and 4 has been found by divers to be eminently suitable for use with a 2-cylinder breathing air supply 50 to which the ballast tank 17 is suitably secured as by straps (not shown). A ballast tank 17 molded of fiberglass and having a volume of approximately ½ cubic foot will provide buoyancies over a range of about 30 pounds extending from minus 10 pounds when flooded to plus twenty pounds when filled with air. Individual divers will of course find it expedient to carry weights to correspond to body density and to compensate for the buoyancy of "wet" suits used in cold water.

While for the purpose of disclosing the invention a preferred embodiment thereof has been described in detail it is to be understood that the invention is not limited thereto but includes those obvious modificaions which will occur to those skilled in the art and which fall within the scope of the appended claim.

What is claimed is:

In combination with underwater breathing apparatus having a supply of air under pressure and a demand valve providing a source of air at substantially ambient pressure, a buoyancy adjusting device comprising:

a constant volume ballast tank,

a conduit extending from said pressure air supply into said ballast tank,

a poppet valve in said conduit within said tank normally biased to a closed position by the air pressure,

a first check valve having an inlet and an outlet and operable to maintain a selected pressure difference therebetween,

an inlet port to said tank connected through said first check valve to said source of ambient pressure air to admit ambient pressure air to said tank when the air pressure in said tank is less than ambient pressure by an amount greater than the difference pressure maintained by said first check valve,

a second check valve having an inlet and an outlet and operable to maintain a selected pressure difference therebetween,

a passageway in said tank having an outlet port to the exterior of said tank,

a standpipe within said tank having an inlet at a position intermediate said first and second check valves and connected through said second check valve to said passageway when the pressure in said tank exceeds the ambient pressure by an amount greater than said selected pressure (difference) maintained by said second check valve,

a valve assembly comprising a first valve means movable to a position providing direct communication between the inside and outside of said tank, and a second valve means movable to a position closing said standpipe to said second check valve and thereafter opening the poppet valve in said conduit,

valve disc means on said tank normally biased to closed position, and

manually actuated means operatively connected to said valve assembly and to said valve disc means, movable in one direction for moving said valve assembly to its respective positions and in the other direction for actuating said valve disc means to open position to vent the top and bottom of said tank.

No references cited.

BENJAMIN BENDETT, *Primary Examiner.*

JACOB I. NACKENOFF, WILLIAM I. MUSHAKE, *Examiners.*