Jan. 10, 1928. 1,655,617

B. J. LINDGREN

CONTROLLING MECHANISM FOR POWER PRESSES

Filed Dec. 24, 1925 4 Sheets-Sheet 1

Fig. 1.

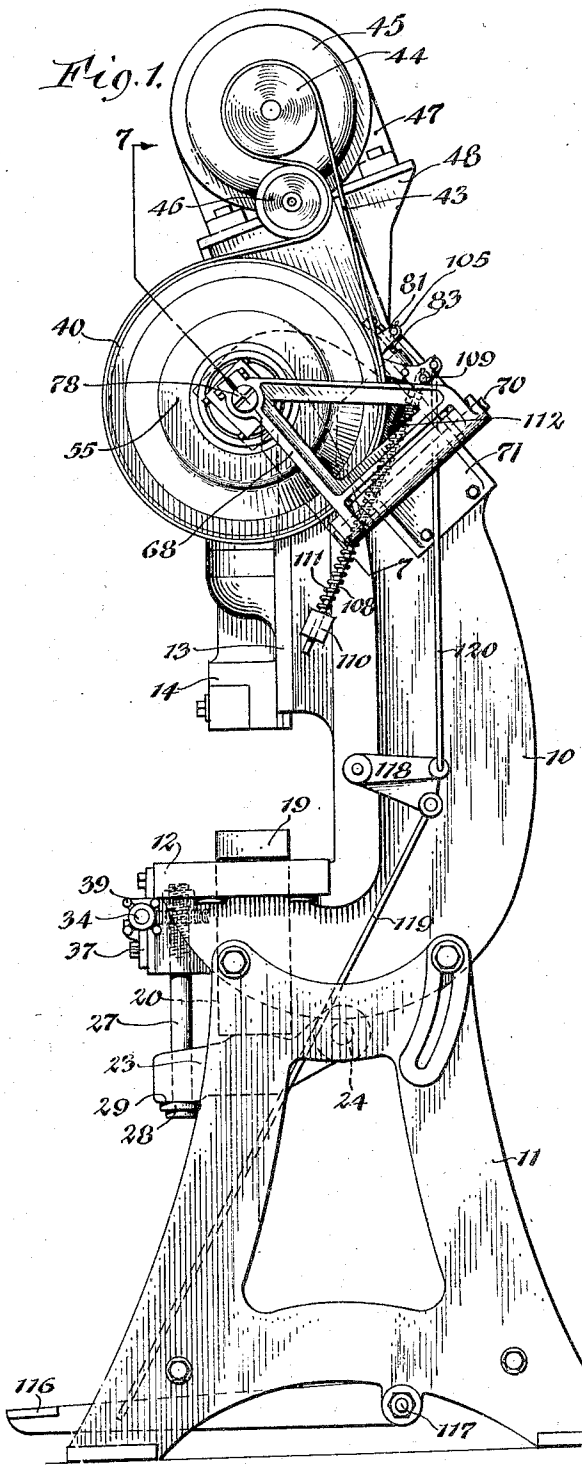

Inventor
Bror J. Lindgren
by Popp & Powers
Attorneys

Jan. 10, 1928. 1,655,617

B. J. LINDGREN

CONTROLLING MECHANISM FOR POWER PRESSES

Filed Dec. 24. 1925 4 Sheets-Sheet 2

Fig. 2.

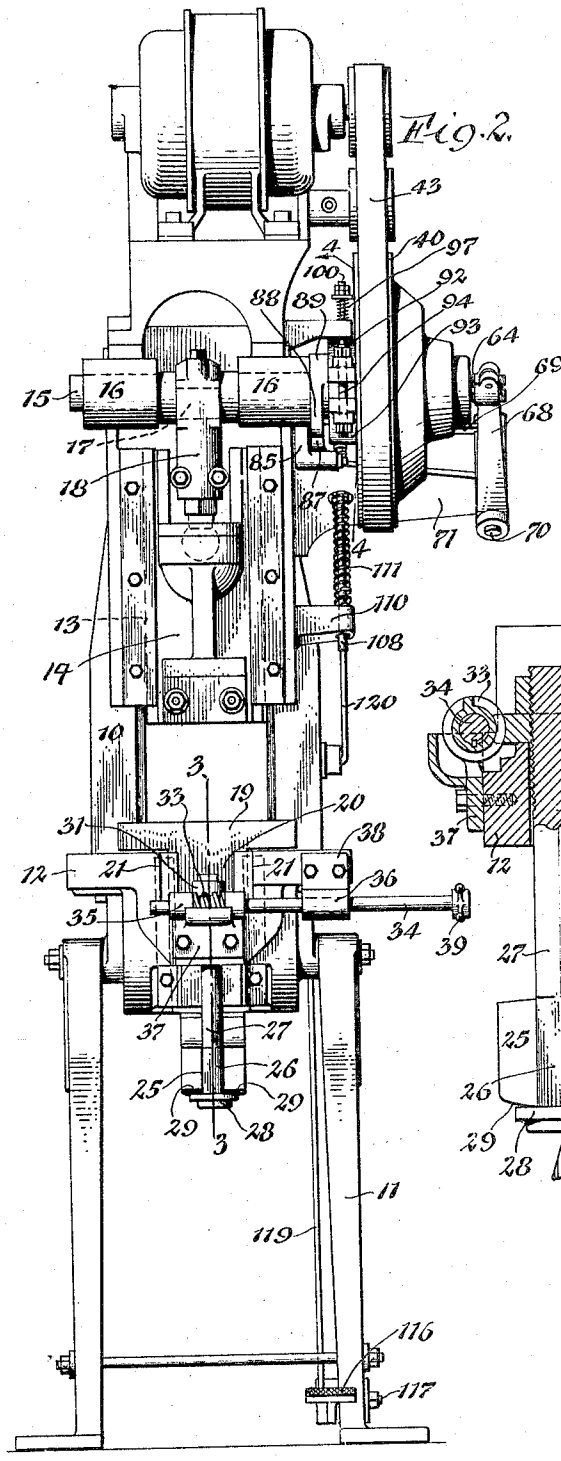

Fig. 3.

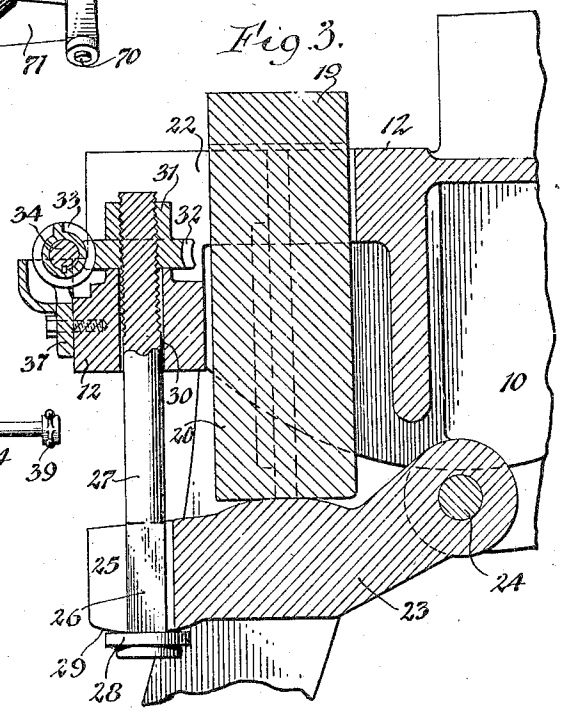

Inventor
Bror J. Lindgren
by Popp & Powers
Attorneys

Jan. 10, 1928. 1,655,617

B. J. LINDGREN

CONTROLLING MECHANISM FOR POWER PRESSES

Filed Dec. 24, 1925 4 Sheets-Sheet 3

Fig. 4.

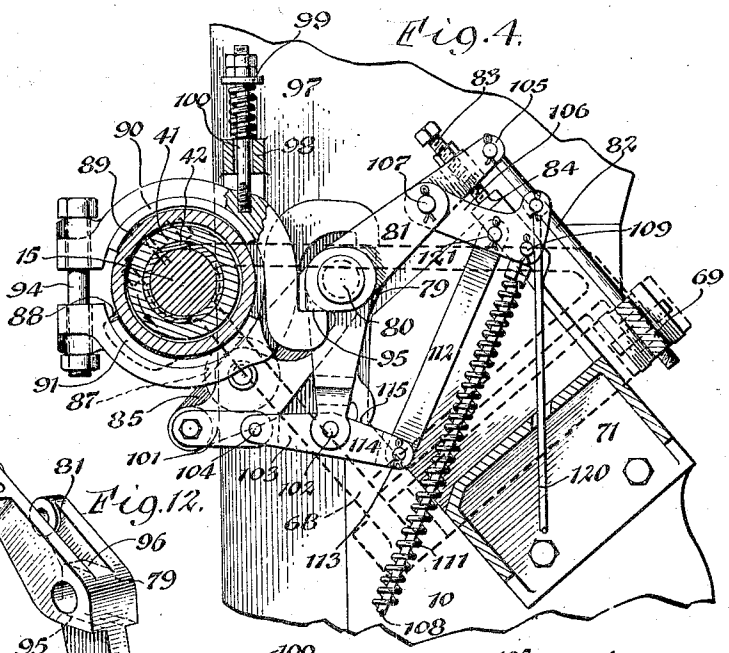

Fig. 10.

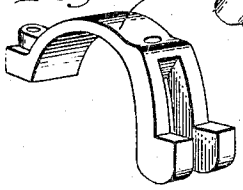

Fig. 12.

Fig. 11.

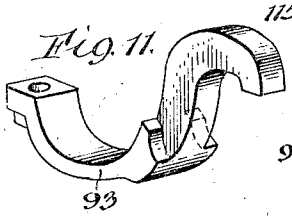

Fig. 5.

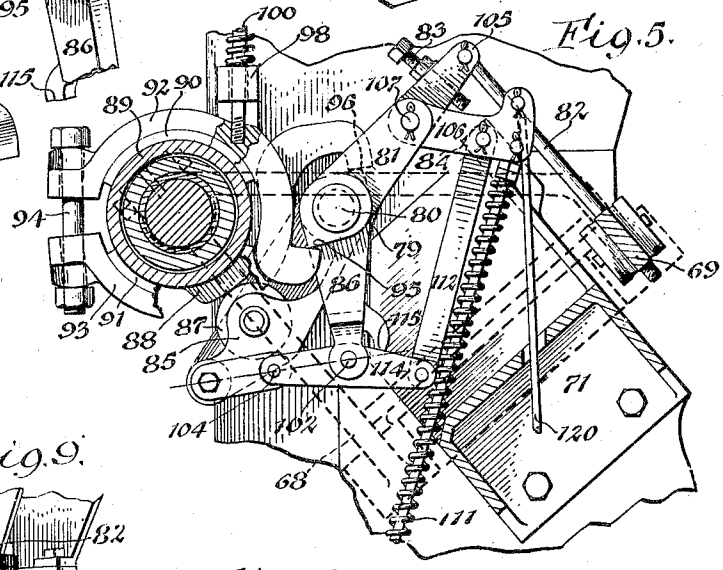

Fig. 9.

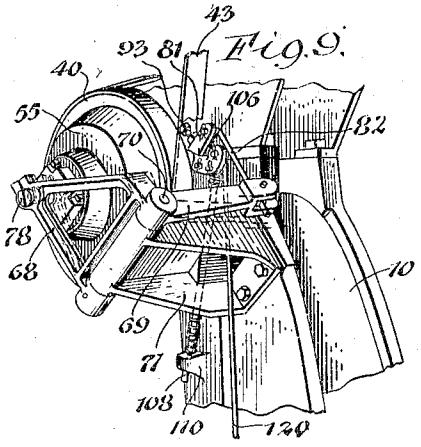

Fig. 13.

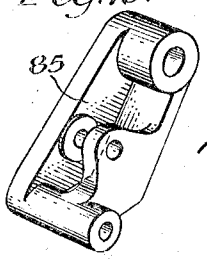

Inventor
Bror J. Lindgren
by Robb & Sawers
Attorneys

Jan. 10, 1928. 1,655,617

B. J. LINDGREN

CONTROLLING MECHANISM FOR POWER PRESSES

Filed Dec. 24, 1925 4 Sheets-Sheet 4

Fig. 6.

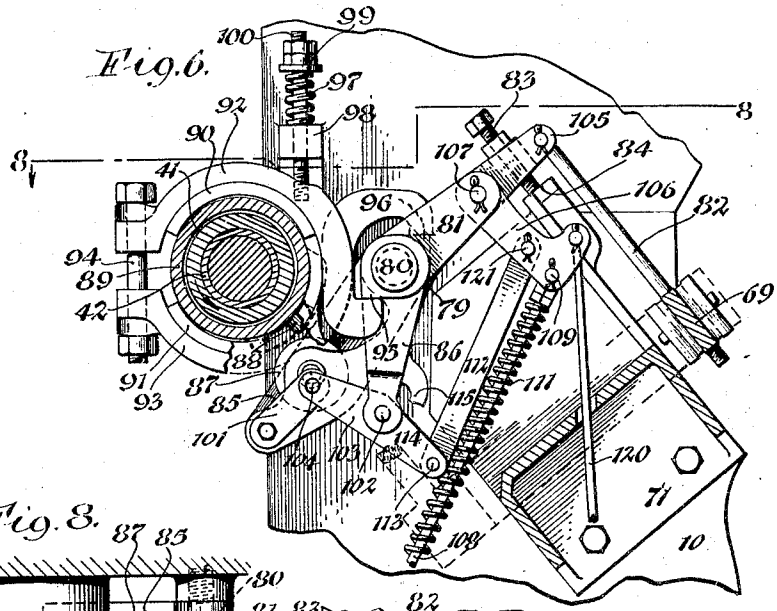

Fig. 8.

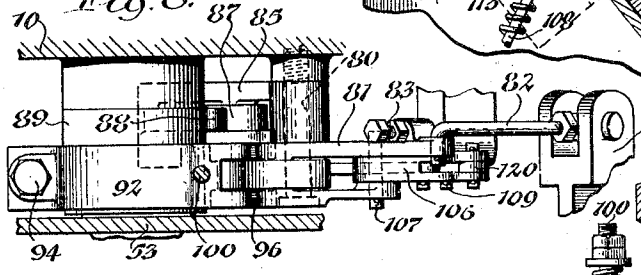

Fig. 7.

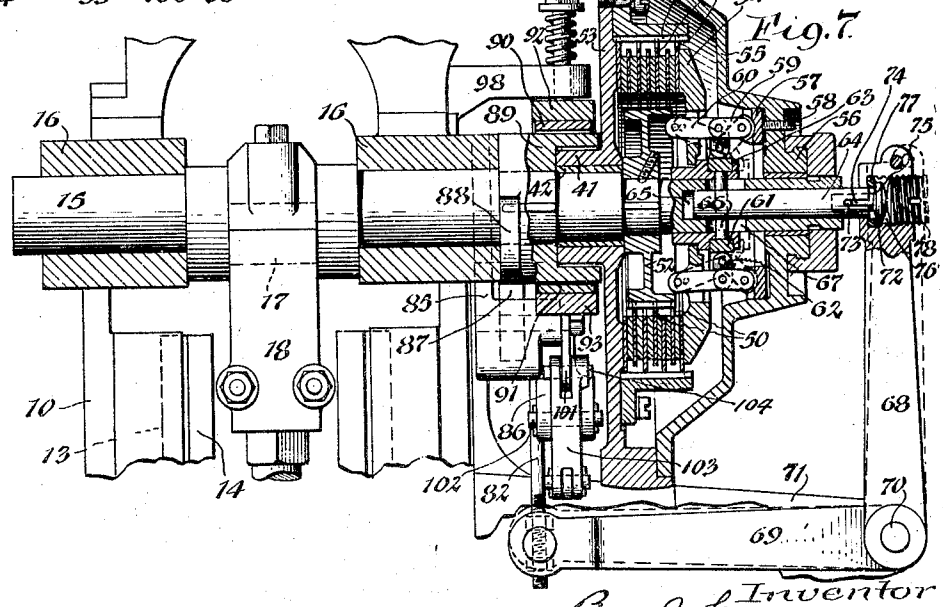

Inventor
Bror J. Lindgren
by Pabst & Powers
Attorneys

Patented Jan. 10, 1928. 1,655,617

UNITED STATES PATENT OFFICE.

BROR J. LINDGREN, OF BUFFALO, NEW YORK, ASSIGNOR TO NIAGARA MACHINE & TOOL WORKS, OF BUFFALO, NEW YORK, A CORPORATION OF NEW YORK.

CONTROLLING MECHANISM FOR POWER PRESSES.

Application filed December 24, 1925. Serial No. 77,447.

This invention relates to a driving mechanism for stamping presses and it has for its object the provision of such a mechanism whereby the press can be operated at much higher speed than has been possible heretofore, thereby enabling the output of the press to be materially increased and the cost of production reduced accordingly.

Heretofore, presses of this character have been provided with tooth clutches which rendered it impossible to run the same at comparatively high speed, because the teeth or co-operating shoulders of such clutches would become broken when engaged under high speed, and thus necessitate maintaining a comparatively slow speed so that the engagement of the teeth or shoulders on the clutch members could be effected without breaking them.

In order to permit of operating the press at higher speed, the present invention contemplates the use of a friction clutch, preferably one which employs multiple friction discs which are intercalated and which, upon being pressed together, enable the movement from the driving member to the driven member of the same to be effected gradually, inasmuch as a certain amount of slippage is permitted between the multiple discs during the initial portion of the closing movement of the clutch, but which slippage is gradually reduced and finally eliminated altogether when the full pressure is applied to the clutch, whereby a positive closing movement of the clutch is permitted at high speed without liability of stripping any clutch teeth or shoulders.

With this end in view, the invention consists generally of a multiple disc clutch, and means for either causing the same to be opened or closed for each operation of the press, as well as permitting the same to operate continuously, the operating mechanism for this purpose being preferably constructed as hereinafter shown and described.

In the accompanying drawings, Figure 1 is a side elevation of a stamping or punching press embodying the preferred form of my invention. Figure 2 is a front elevation of the same. Figure 3 is a vertical longitudinal section, on an enlarged scale, taken on line 3—3, Figure 2. Figure 4 is a fragmentary vertical longitudinal section, on an enlarged scale, taken on line 4—4, Figure 2, and showing the press controlling mechanism in a running position but ready to be automatically stopped.

Figure 5 is a similar view showing the controlling mechanism in the position which it assumes when the press is stopped. Figure 6 is a similar view showing the position of the parts of the controlling mechanism when the same has been operated for starting the operation of the press. Figure 7 is a vertical cross section, on an enlarged scale, taken on line 7—7, Figure 1. Figure 8 is a fragmentary horizontal section taken on line 8—8, Figure 6. Figure 9 is a fragmentary perspective view of the controlling mechanism. Figures 10 and 11 are perspective views of the brake arms or levers forming part of the brake mechanism, whereby the rotation of the main shaft is arrested for the purpose of promptly stopping the operation of the press when the driving clutch is uncoupled. Figures 12 and 13 are similar views of the main or trip lever and the auxiliary or the cam lever which form parts of the controlling mechanism.

In the following description, similar characters of reference indicate corresponding parts throughout the several views of the drawings.

This invention is applicable to stamping and punching presses which may be of various forms as to their detailed construction and the particular press which is shown in the drawings is, therefore, to be taken as typical of one capable of use in connection with this invention. As there shown, the press comprises a main frame 10 which is mounted upon a base frame 11 and provided with a lower bed 12, which is adapted to support the die or lower forming member, whereby the article is adapted to be shaped or punched, and an upper vertical guideway 13 in which a slide 14 moves vertically and is adapted to carry a punch or upper forming member adapted to co-operate with the lower forming member or die in the production of articles to be stamped or punched. This upper slide 14 is reciprocated vertically in its guideway by a horizontal shaft 15, journaled transversely in a bearing 16 on the upper part of the main frame and provided with a crank or wrist 17, which is connected with the slide 14 by means of a pitman or connecting rod 18 so that a vertical reciprocating motion is imparted to the punch or upper die member during the rotary move-

ment of the crank shaft 15 in the usual and well known manner in this type of stamping or punching presses.

In the present instance the blank or sheet to be cut or stamped is adjustably mounted by intermediate means on the bed or table 12 for the purpose of accurately fitting the die to the punch when setting up the press and also for taking up wear. The preferred form of these adjusting means is constructed as follows:—

Movable vertically on the lower bed 12 is a lower slide having an upper head 20 adapted to carry the die and a lower shank 19 depending from the head and guided in vertical ways arranged on opposite sides of an opening 22 in the bed plate 12. At its lower end, this shank 20 is engaged by a vertically swinging lifting lever 23 which is pivoted at its rear end on the main frame by means of a transverse horizontal pin 24. The front end of the lifting lever 23 is provided with a longitudinal notch or slot 25 which receives the lower flat sided portion 26 of a lifting rod 27, said flat sided portion 26 engaging with the sides of the notch 25 so as to prevent this rod from turning in the lever 23, but still permitting an oscillating movement of the rod and lever relatively to each other in a vertical plane lengthwise of the machine. At its lower end, the lifting rod is provided with a head 28 which bears against the lower rounded side 29 of the lifting lever and its upper end passes through a vertical opening 30 formed in the front part of the bed 12. This upper end of the lifting rod 27 is externally screw-threaded and receives an adjusting screw nut 31 which rests on top of the adjacent part of the bed 12 and is provided on the lower part of its periphery with a worm rim or wheel 32. Meshing with the front part of this worm wheel is a worm 33 which is secured to a horizontal transverse shaft 34 journaled in suitable bearings 35 and 36, the bearings 35 being formed on a bracket 37 which is detachably secured to the front side of the bed 12 and the bearing 36 being detachably secured to a hanger 38, secured to the front side of the bed 12, adjacent to one corner thereof. The worm 33 is confined between the bearings 35 so as to be held against longitudinal movement and rotation of this worm is effected by means of a handle or wheel 39, secured to the outer end of the shaft 34, as shown in Figures 1 and 2.

Upon turning the worm 33 by means of handle 39, the worm wheel 32 and the screw nut 31 formed thereon are turned about the lifting rod 27, whereby the latter is raised or lowered, depending upon which way the shaft 34 is turned. Upon raising and lowering the rod 27, the die mounted on the lower slide 19, 20, is adjusted accordingly through the medium of the lifting lever 23. The weight of these parts operates to keep the screw nut 31 and worm wheel 32 in engagement with the upper side of the front part of the bed 12, so that no separate means are required for keeping the parts in a normal position.

By means of this mechanism, the lower slide may be raised or lowered for the purpose of accurately adjusting the lower forming member or die to the fixed level of the feed when setting up the press, and also when it becomes necessary to compensate for wear, and after these parts are adjusted, they are reliably held in place without requiring any separate fastening for this purpose. Moreover, this means of adjusting the lower cutting member or die permits of effecting this adjustment while the press is in operation, thereby facilitating setting up the press and reducing the cost of production accordingly.

The mechanism for controlling the operation of the press in accordnace with my invention, is constructed as follows:

The numeral 40 represents a driving pulley or wheel which has its hub 41 journaled on bushing 42 on a part of the driving shaft 15. This driving pulley is rotated contantly and motion may be transmitted to the same for this purpose by any suitable means. For example, by means of a driving belt 43, passing with one turn around the driving pulley 40 and with another turn around the pulley 44 of an electric motor 45, while its intermediate part passes around a tightener pulley 46. The base 47 of the motor is mounted on bracket 48, rising from the upper end of the main frame of the press and the tightener pulley 46 is also mounted on the adjacent part of the motor base so that the prime mover of the press and the working parts of the same are practically mounted on the same frame so as to form one complete unit therewith.

The driving pulley 40 and the driving shaft 15 are adapted to be connected and disconnected by means of a friction clutch which permits of the desired amount of slippage during the initial part of the closing movement of the clutch and thereby prevent sudden closing of the clutch or the transmission of a shock from the driving to the driven members, which, otherwise, would be liable to either break or injure the same. The friction clutch which is preferably employed for this purpose, comprises a plurality of driving and driven friction discs 49 and 50 which are intercalated and which when pressed together cause the driving pulley 40 and driving shaft 15 to turn together, but when the same are free and not subjected to lateral pressure, the same are uncoupled and permit the driving pulley 40 to turn while the driving shaft 15 remains stationary. The driving friction discs 49 are connected

with the driving pulley 40 so as to turn therewith by means of one or more spline arms 51 interlocked with the periphery of the driving discs 49 and secured to the outer side of the driving pulley 40, and the several driven friction discs, and splined at their inner edges to a hub 52 which is secured to the adjacent part of the driving shaft 15. These two sets or groups of friction plates are arranged between the outer side of the web 53 of the driving pulley and a presser ring, disc or plate 54 so that upon moving the latter toward the web of the driving pulley, the several friction plates will grip each other and cause the rotary motion of the driving pulley 40 to be transmitted to the driving shaft 15 while upon moving this presser disc 54 outwardly, the pressure of the several friction discs against each other will be released and the driving wheel 40 will be uncoupled from the driving shaft 15. The movement of the presser disc 54 toward and from the driving wheel 40 for coupling and uncoupling the driving wheel and driving shaft may be effected by various means, those shown in the drawings being constructed as follows:

Numeral 55 represents an outwardly dished cap secured to the peripheral portion of the driving wheel 40 and provided centrally with a bearing 56 in which the outer end of the driving shaft is journaled. Centrally on the inner side of the cap 55 is mounted an adjusting ring 57 which is backed by screws 58 on the cap and on its inner side, this adjusting or thrust ring is connected with the presser plate 54 by a plurality of toggles, each of which consists of a pair of outer and inner links 59, 60, which have their opposing ends pivotally connected with each other, while the outer end of the outer link is pivotally connected with the thrust ring 57 and the inner end of the inner link is pivotally connected with the presser plate or disc 54. Upon pushing the opposing ends of the several pairs of links through and outwardly so that they are straightened relatively to each other, as shown by full lines in Figure 7, the presser plate will be forced inwardly and cause the two sets of friction discs to couple the driving wheel and shaft, but when the opposing ends of the several toggle links are drawn inwardly so that they stand at an angle relatively to each other, as shown by dotted lines in Figure 7, the presser plate 54 will be drawn outwardly and release the lateral pressure against the friction discs so that the driving wheel and shaft will be uncoupled. The unfolding or scraping action on the toggle links and the folding or non-straightening action on the same is effected by means of a shifting ring 61 connected on its periphery by means of a plurality of links 62 with shifting ring 61 and capable of rotating freely in an annular groove formed on the periphery of a shifting sleeve which latter is capable of sliding lengthwise on the periphery of the driving shaft. This sliding movement of the shifting sleeve 63 is effected by means of a longitudinal moving shifting rod 64 sliding lengthwise in an axial opening or bore 65 of the driving shaft and a coupling pin 66 passing transversely through the inner end of the shifting rod 64 and through longitudinal slot 67 in the adjacent part of the driving shaft, while their outer ends engage with openings in the shifting sleeve 63, as shown in Figure 7. Upon moving the rod 64 inwardly, the clutch will be coupled for connecting the driving pulley 40 and the driving shaft 15, while upon moving this rod 64 outwardly, this clutch will be uncoupled and the driving wheel 40 will rotate independently of the driving shaft 15. By turning the screws 58 backwardly or forwardly, the position of the thrust ring or plate 57 may be adjusted to secure the desired pressure of the friction discs against each other.

Numerals 68 and 69 represent the upper and lower arms of an elbow lever which is pivotally mounted at its elbow by means of a pivot pin 70 on a bracket 71 projecting laterally from the adjacent part of the main frame 10. The upper arm 68 of this elbow lever is coupled with the outer end of the shifting rod 64 so as to be compelled to move therewith and still inside the driving shaft to turn independently of this lever. Although this may be accomplished in various ways, the means for this purpose shown in the drawings consists of a coupling rod 72, having a cross pin 73 at its inner end which engages with a longitudinal slot 74 in the outer end of the driving shaft, a spherical coupling head 75 arranged at the outer end of the coupling rod 72 and within a socket 76 on the outer end of the lever arm 68, a thrust ring 77 arranged at the inner end of the socket 76 and bearing against the rear side of the coupling head 75, and a thrust screw 78 engaging with the internally threaded outer part of the socket 76 and engaging with the front side of the coupling head 75, as shown in Figure 7.

The numeral 79 represents an intermediate or trip lever which is pivoted by means of a pin 80 on the adjacent part of the main frame of the press and has its upper arm 81 connected by means of a shifting rod 82 with the lower arm 69 of the elbow lever. The rocking movement of this trip lever in the direction for lowering or swinging its upper arm 81 backwardly is limited by means of a stop screw 83 mounted on the arm of this lever and adapted to engage with an abutment, or stop surface 84 on the adjacent part of the main frame, as shown in Figures 4 and 6. The numeral 85 repre-

sents a cam arm which is pivoted at its upper end on the same pin 80 about which the trip lever turns and which projects downwardly from this pivot adjacent to the front side of the lower arm 86 of the trip lever. Between its upper and lower ends, the cam arm is provided with a bearing surface 87, preferably in the form of a roller which is adapted to be engaged by a cam 88 arranged to turn with the driving shaft. In the preferred construction, this cam 88 is formed on a drum 89 which is splined to the driving shaft and overhangs the hub of the driving wheel 40 and has a cylindrical periphery which serves as the gripping surface of a brake drum forming part of the brake mechanism for stopping the rotation of the driving shaft. The periphery of this brake drum is adapted to be engaged by upper and lower brake shoes 90, 91, which are of segmental form and mounted on the inner sides of upper and lower brake levers 92, 93 which are of curved form and pass over the upper and lower sides of the drum 89. The front ends of these two brake levers are connected by a coupling bolt 94 and their rear ends cross each other in the form of a pair of shears, and the rear end of the upper brake arm engages with downwardly facing cam 95 on the hub of the trip lever and the rear end of the lower brake arm or lever engages with an upwardly facing cam 96 on the hub of the trip lever. It follows from this construction that when the trip lever is turned anti-clockwise in Figure 5, the cams 95 and 96 will cause the rear arm of the upper brake lever to be depressed and the rear end of the lower brake arm 93 to be raised, thereby engaging the brake shoes 90 and 91 with the brake drum 89 and stopping the rotation of the driving shaft 15 and the parts connected therewith, while upon moving the trip lever 79 clockwise, as in Figure 6, the trip cams 95 and 96 will be retracted from the rear free ends of the brake levers 92 and 93 and thereby permit the brake shoes to release their grip on the brake drum and enable the driving shaft to be turned by power derived from the motor 45 or elsewhere. By adjusting the bolt 94, the position of the brake shoes 90 and 91 relative to the brake drum may be varied to suit requirements. When the brake levers 92 and 93 are released, the lower arm drops by gravity from the under side of the brake drum, while the upper brake arm or lever is lifted therefrom by means of a spring 97 bearing at one end against an abutment 98 on the main frame, while its opposite end bears against a shoulder 99 formed on a rod 100, which latter passes through the bracket 98 and is connected at its lower end with the upper brake arm 92, as shown in Figure 5.

The lower ends of the cam arm 85 and the lower arm 86 of the trip lever are connected by a toggle mechanism whereby, at times, these arms may be moved toward and from each other. In its preferred construction, this toggle mechanism comprises a front toggle link 101 pivoted at its lower end on the cam arm 85, and a toggle lever pivoted by a pin 102 on the lower end of the arm 86 and having its front arm 103 connected by means of a pin 104 with the rear end of the front toggle link. Intermediate of its upper and lower ends, the upper arm 105 of the trip lever 79 has pivoted thereto the rear end of a shifting lever 106 by means of a pin 107. This shifting lever 106 is yieldingly held in its elevated position by a tension device which, in the present case, consists of shifting rod 108 pivotally connected at its upper end by means of a pin 109 with the rear end of the shifting lever 106, while its lower end passes through a guide lug 110 on the main frame and a spring 111 surrounding the tension rod 108 and bearing at its upper end against a shoulder on the rod 108, while its lower end bears against the guide lug 110 which forms an abutment therefor. Between its front and rear ends, the shifting ring is connected by means of a pin 121 with the upper end or a toggle bar 112 which latter is pivotally connected at its lower end by means of a pin 113 with the rear arm 114 of the toggle lever. On its rear part, the lower arm 86 of the trip lever is provided with a stop 115 which is adapted to be engaged by the rear arm 114 of the toggle lever for arresting the movement of the latter when the toggle is in its straightened or unfolded position, as shown in Figures 4 and 5.

Downward movement of the shifting lever 106 for starting the press is effected by motion derived from a vertically movable treadle 116 which is pivoted at its rear end by means of a pin 117 on the base of the machine. Movement from this treadle is transmitted to the shifting lever 106 by means of an intermediate rock arm 118 pivoted on the main frame to swing vertically, a lower shifting rod 119 connecting the front part of the treadle 116 with the lower part of the intermediate rock lever 118, and an upper shifting rod 120 connecting the upper part of the intermediate rock arm 118 with the upper part of the shifting lever 106, as best shown in Figure 1.

The operation of this controlling mechanism is as follows:

When the press is at rest, the parts are in the position indicated in Figure 5, at which time the cam 88 is in engagement with the roller 87 and holds the cam arm 85 in its downwardly and rearwardly moved position, the spring 111 holds the shifting arm or lever 106 in its elevated position so that the toggle link 101 and the toggle

lever 103 and 114 are straightened relatively to each other so as to turn the trip lever 79 in the direction in which its upper arm 105 produces an upward pull on the shifting rod 82, and thereby causes the clutch rod 64 to be drawn outwardly so as to disengage the driving and driven friction discs of the clutch from each other and thereby uncouple the constantly rotating driving pulley 40 from the driving shaft 15. At the same time, the rotation of the trip lever 79 in this direction causes the brake cams 95 and 96 to turn the brake levers in the direction for causing the brake shoes to engage with opposite sides of the brake drum and hold the driving shaft against rotation.

For the purpose of starting the press, the attendant depresses the treadle 116, whereby the shifting arm 106 is lowered as indicated in Figure 6. This lowering of the arm 106 causes the rear arm 114 of the toggle lever to be depressed and the front arm 103 of the same to be raised, together with the toggle link 101, thereby folding or breaking the toggle connection between the cam arm 85 and the lower arm 86 of the trip lever, which releases both the trip lever and the cam lever and permits the trip lever to move clockwise and the cam lever to move anti-clockwise about the axis provided by the pivot pin 80. This movement of these levers is produced by the continued downward movement of the treadle 116 after the initial or unlocking portion of this movement has been effected so that the last part of this downward movement of the treadle 116 causes the trip lever 79 to be moved clockwise until its stop screw 83 bears against the stop shoulder 84, as shown in Figure 6, thereby causing the shifting rod 82 to be pushed downwardly and the elbow lever 68 and 69 to be turned anti-clockwise as shown in Figure 7, and thereby producing an inward motion of the shifting rod 64 which operates to press the clutch discs together and couple the driving wheel 40 with the driving shaft 15. At the same time that the trip arm 79 moves clockwise to couple the clutch, the cam arm 85 moves downwardly and rearwardly under its own weight far enough to cause the cam roller 87 to clear the cam 88 as shown in Fig. 6, and thereby release the driving shaft from any resistance and permit the same to start its turning movement promptly and immediately upon closing the clutch. The anti-clockwise movement of the trip lever 79 also causes the brake operating cams 95 and 96 to release their pressure on the brake arms 92 and 93 and thereby release the brake shoes from the brake drum the instant that the clutch is coupled, and thereby permit the driving shaft to begin its rotary movement the instant the same is coupled with the prime mover.

If the operator wishes the press to go through only one cycle of operations which is accomplished during one rotation of the driving shaft, the operator takes his foot off the treadle 116 immediately after starting the press, whereby the treadle, together with shifting lever 106, is raised due to the resilience of the spring 111, thereby causing the toggle bar 112 to raise the rear arm 114 of the toggle lever and depress the front arm 103 thereof, together with the toggle link 101 so that the pivotal connections between these several parts are in line, as shown in Figure 4, whereby the cam arm 85 is moved forwardly and upwardly so that its roller 87 is in the path of the cam 88, as shown in the same figure. As the driving shaft 15 approaches the end of one complete rotation, the throw-out cam 88 mounted thereon engages with the roller 87 and moves the cam lever 85 downwardly and forwardly which movement, due to the straightened position of the toggle link 101 and front toggle arm 103, is transmitted through these toggle members to the trip lever 79 so that the latter is turned anti-clockwise, as shown in Figure 5, and causes an upward pull on the rod 82 whereby the elbow lever 68, 69 is shifted in the direction for uncoupling the clutch and disconnecting the driving shaft 15 from the constantly rotating driving pulley 40. At the same time, this movement of the trip lever causes the brake cams 95 and 96 to draw the brake shoes 90 and 91 against the opposite sides of the brake drum 89 so that the rotation of the driving shaft and the movement of the parts associated therewith is arrested immediately when the power is thrown off from the press.

If, however, it is desired to run the press continuously instead of starting and stopping the same, this can be accomplished by the operator keeping his foot on the treadle 116 and maintaining the latter in its depressed position, whereby the shifting arm 106 will be maintained constantly in its depressed position and the toggle link and lever will remain in the unfolded position, as shown in Figure 6, whereby the cam roller 87 will be maintained out of the path of the throw-off cam 88, the brake cams 95, 96 will release their pressure on the brake arms and permit the driving shaft to rotate freely, and the trip lever 79 will remain turned into its extreme position in an anti-clockwise direction with its stop 83 resting against the shoulder 84 so that the elbow lever 68 and 69 will hold the clutch in its coupled position for continuously transmitting power from the prime mover to the driving shaft of the press and the latter is caused to perform successful cycles of its operations without interruption between succeeding cycles.

It will be apparent from the foregoing description of this invention that owing to the

employment of a friction clutch of the character described, it is possible to close this clutch very rapidly and transmit motion from the prime mover to the working parts of the press without liability of stripping any gears or clutch teeth or injuring other parts and that the preferred form of the mechanism whereby the opening and closing of the clutch is effected are of such a character that the clutch operates independently to couple and uncouple the driving wheel and driving shaft, that the brake mechanism operates rapidly to release the driving shaft the instant that the clutch is coupled and to arrest the rotation of the driving shaft when the clutch is uncoupled, and that these operations are accomplished by means which are easily operated and reliably hold the parts either in their operative or inoperative position so that the press is positively locked against operation when it is not required, thereby avoiding all liability of the operator becoming injured accidentally.

I claim as my invention:—

1. A controlling mechanism for a power press having a driving shaft and a driving pulley, a friction clutch interposed between said driving shaft and driving pulley, a trip lever connected with said clutch, means for moving said trip lever manually in the direction for closing said clutch, means for moving said trip lever by power in the opposite direction for opening said clutch, comprising a cam lever, a toggle connecting said cam lever and trip lever, a cam on the driving shaft adapted to engage said cam lever, and means for folding and unfolding said toggle comprising a shifting lever mounted on the trip lever, a bar pivotally connected with said shifting lever and said toggle, a spring for raising said shifting lever, and a manually operated rod connected with said shifting lever for depressing the same.

2. A controlling mechanism for a power press having a driving shaft and a driving pulley, comprising a friction clutch interposed between said shaft and pulley, an elbow lever having one arm connected with said clutch, a trip lever having one of its arms connected with the other arm of said elbow lever, a toggle lever pivoted on the other arm of said trip lever, a cam arm, a toggle link pivoted on said cam arm and pivotally connected with one arm of said toggle lever, a shifting lever pivoted on that arm of said trip lever which is connected with the elbow lever, a bar pivotally connecting the other arm of said toggle lever with said shifting lever, a spring for yieldingly holding said shifting lever in its upper position, a treadle connected with said shifting lever, and a cam on said driving shaft adapted to engage said cam arm and deflect the same and the trip lever through the medium of said toggle link and said toggle lever.

3. A controlling mechanism for a power press having a driving shaft and a driving pulley, comprising a friction clutch interposed between said shaft and pulley, an elbow lever having one arm connected with said clutch, a trip lever having one of its arms connected with the other arm of said elbow lever, a toggle lever pivoted on the other arm of said trip lever, a cam arm, a toggle link pivoted on said cam arm and pivotally connected with one arm of said toggle lever, a shifting lever pivoted on that arm of said trip lever which is connected with the elbow lever, a bar pivotally connecting the other arm of said toggle lever with said shifting lever, a spring for yieldingly holding said shifting lever in its upper position, a treadle connected with said shifting lever, a cam on said driving shaft adapted to engage said cam arm and deflect the same and the trip lever through the medium of said toggle link and said toggle lever, a brake drum rotatable with said driving shaft, and a shoe adapted to be engaged with said drum by motion derived from said trip lever.

4. A controlling mechanism for a power press having a driving shaft and a driving pulley, comprising a friction clutch interposed between said shaft and pulley, an elbow lever having one arm connected with said clutch, a trip lever having one of its arms connected with the other arm of said elbow lever, a toggle lever pivoted on the other arm of said trip lever, a cam arm, a toggle link pivoted on said cam arm and pivotally connected with one arm of said toggle lever, a shifting lever pivoted on that arm of said trip lever which is connected with the elbow lever, a bar pivotally connecting the other arm of said toggle lever with said shifting lever, a spring for yieldingly holding said shifting lever in its upper position, a treadle connected with said shifting lever, a cam on said driving shaft adapted to engage said cam arm and deflect the same and the trip lever through the medium of said toggle link and said toggle lever, a brake drum rotatable with said driving shaft, a brake lever having a shoe adapted to engage said brake drum, and a cam turning with said trip lever and adapted to move said brake lever for engaging said brake shoe with said brake drum.

5. A controlling mechanism for a power press having a driving shaft and a driving pulley, comprising a friction clutch interposed between said shaft and pulley, an elbow lever having one arm connected with said clutch, a trip lever having one of its arms connected with the other arm of said elbow lever, a toggle lever pivoted on the other arm of said trip lever, a cam arm, a toggle link pivoted on said cam arm and pivotally connected with one arm of said

toggle lever, a shifting lever pivoted on that arm of said trip lever which is connected with the elbow lever, a bar pivotally connecting the other arm of said toggle lever with said shifting lever, a spring for yieldingly holding said shifting lever in its upper position, a treadle connected with said shifting lever, a cam on said driving shaft adapted to engage said cam arm and deflect the same and the trip lever through the medium of said toggle link and said toggle lever, a brake drum rotatable with said driving shaft, two brake levers having shoes engaging with opposite sides of said drum and having two of their corresponding ends connected and their opposite ends crossed, and two brake cams arranged on said trip lever on opposite sides of the axis thereof and engaging respectively with the crossed ends of said brake levers.

6. A controlling mechanism for a power press having a driving shaft and a driving pulley, comprising a friction clutch interposed between said shaft and pulley, an elbow lever having one arm connected with said clutch, a trip lever having one of its arms connected with the other arm of said elbow lever, a toggle lever pivoted on the other arm of said trip lever, a cam arm, a toggle link pivoted on said cam arm and pivotally connected with one arm of said toggle lever, a shifting lever pivoted on that arm of said trip lever which is connected with the elbow lever, a bar pivotally connecting the other arm of said toggle lever with said shifting lever, a spring for yieldingly holding said shifting lever in its upper position, a treadle connected with said shifting lever, a cam on said driving shaft adapted to engage said cam arm and deflect the same and the trip lever through the medium of said toggle link and said toggle lever, a brake drum rotatable with said driving shaft, two brake levers having shoes engaging with opposite sides of said drum and having two of their corresponding ends connected and their opposite ends crossed, two brake cams arranged on said trip lever on opposite sides of the axis thereof and engaging respectively with the crossed ends of said brake levers, and a yielding support for holding one of said brake levers in an elevated position.

In testimony whereof I affix my signature.

BROR J. LINDGREN.