United States Patent [19]

Franzen

[11] **3,842,577**

[45] **Oct. 22, 1974**

[54] **APPARATUS FOR POSITIONING, STOPPING AND LOCKING OF A SERVICE CARRIAGE MECHANISM OF A TEXTILE YARN PROCESSING MACHINE**

[75] Inventor: **Gustav Franzen,** Krefeld, Germany

[73] Assignee: **Palitex Project Company GmbH,** Krefeld, Germany

[22] Filed: **Oct. 24, 1973**

[21] Appl. No.: **409,032**

[30] **Foreign Application Priority Data**

Apr. 5, 1973 Germany 2317052

[52] **U.S. Cl.** ..... **57/34 R,** 57/53

[51] **Int. Cl.** **D01h 15/00,** D01h 9/14

[58] **Field of Search** ..... 57/1 R, 34 R, 52–54

[56] **References Cited**

UNITED STATES PATENTS

3,374,616	3/1968	Hidden et al.	57/53
3,403,866	10/1968	Bell et al.	57/53 X
3,486,319	12/1969	Lee, Jr. et al.	57/34 R
3,540,200	11/1970	Tsukumo et al.	57/34 R

Primary Examiner—John Petrakes

Attorney, Agent, or Firm—Parrott, Bell, Seltzer, Park & Gibson

[57] **ABSTRACT**

A mechanism for positioning, stopping and locking a service carriage mechanism in predetermined desired locations at the front of a selected spindle assembly or other desired location of a textile yarn processing machine or other machine. The mechanism includes a first locking component in the form of a rotatably mounted roller and a second locking component in the form of at least one elongate member extending longitudinally of the machine including a depression therein medially thereof for receiving the roller and cooperating therewith for stopping and locking the service carriage mechanism and inclined guide surfaces extending longitudinally outwardly from the depression and forming generally an obtuse angle from the depression for contacting and guiding the roller into the depression for positioning the service carriage mechanism. One of the first and second locking components is mounted stationary on the machine at each desired servicing position and the other locking component is movably mounted on the service carriage mechanism for movement between an inoperative position away from contact with the stationary locking component and an operative position for contact with the stationary locking component when positioning, stopping and locking of the service carriage mechanism is desired. Selectively operable mechanisms are carried by the service carriage mechanism for resiliently moving the movable locking component into the operative position thereof.

23 Claims, 12 Drawing Figures

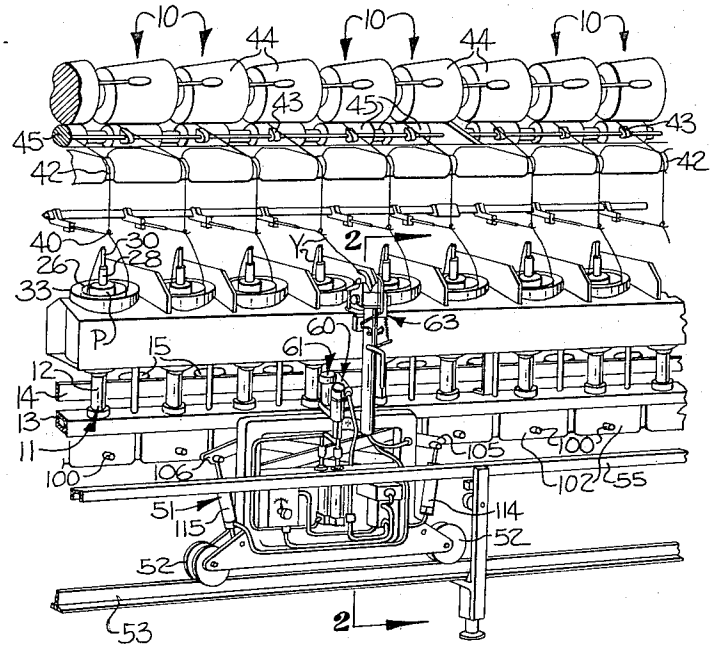

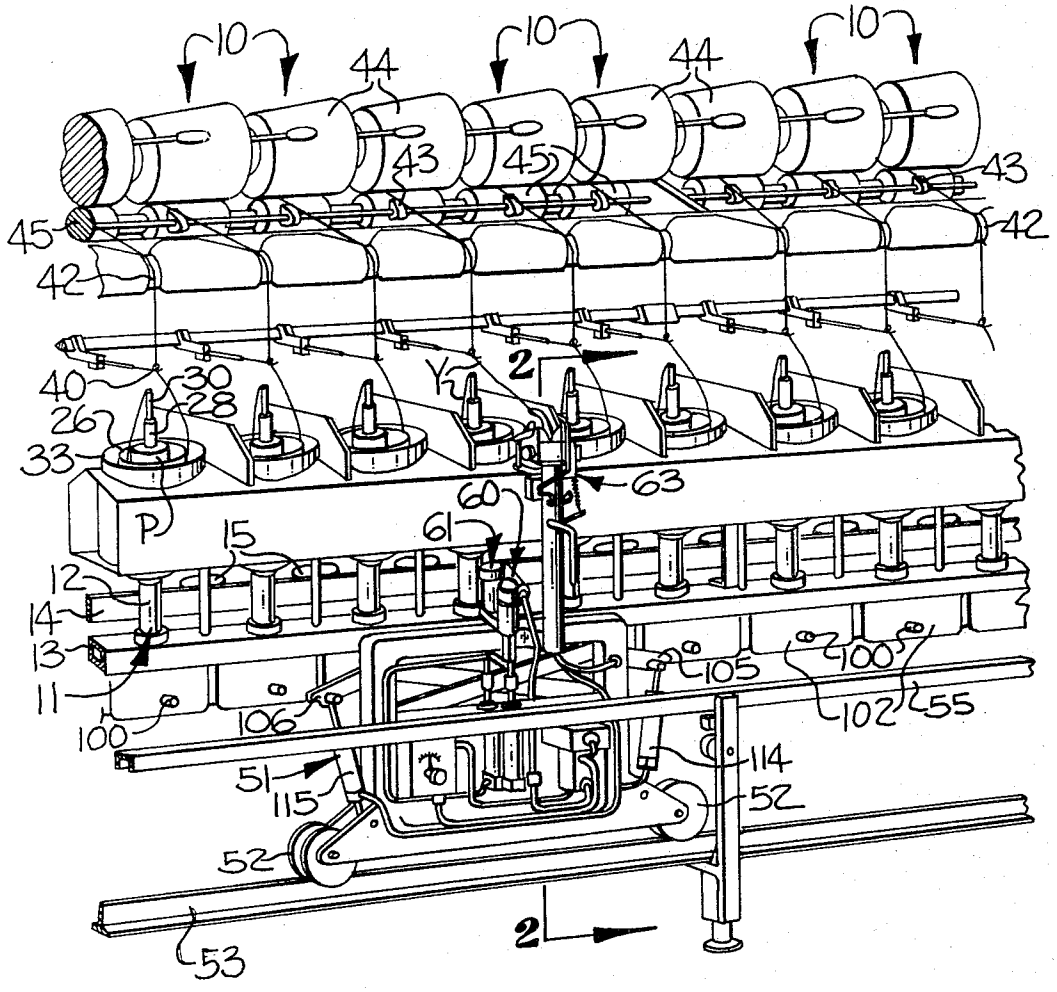
10
44
43
45
42
40
30
28
26
33
P
15
60
61
63
12
14
13
11
100
106
105
102
55
51
115
114
52
53
2

FIG-1

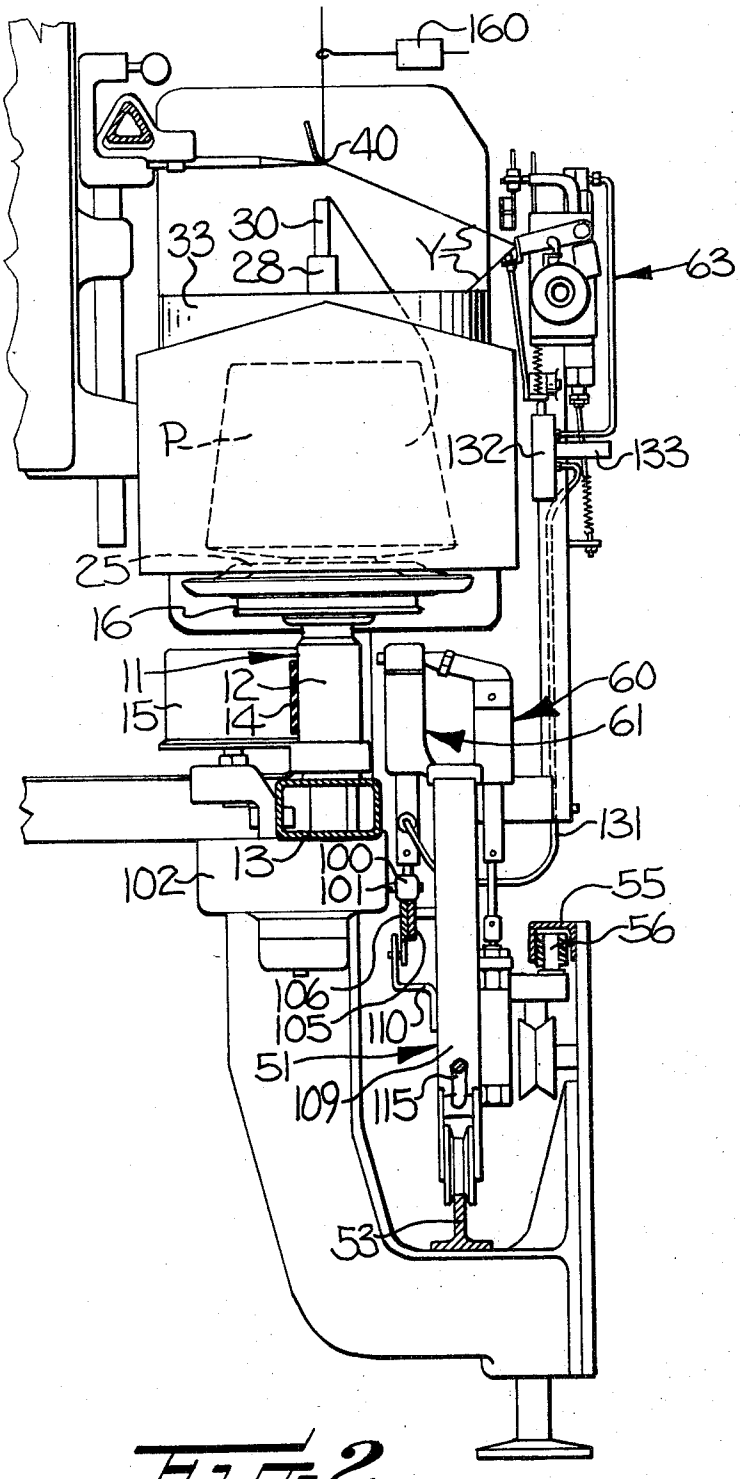
160
40
33
30
28
Y
63
P
132
133
25
16
11
12
15
14
60
61
131
102
13
100
101
55
56
106
105
110
51
109
115
53

Fig-2

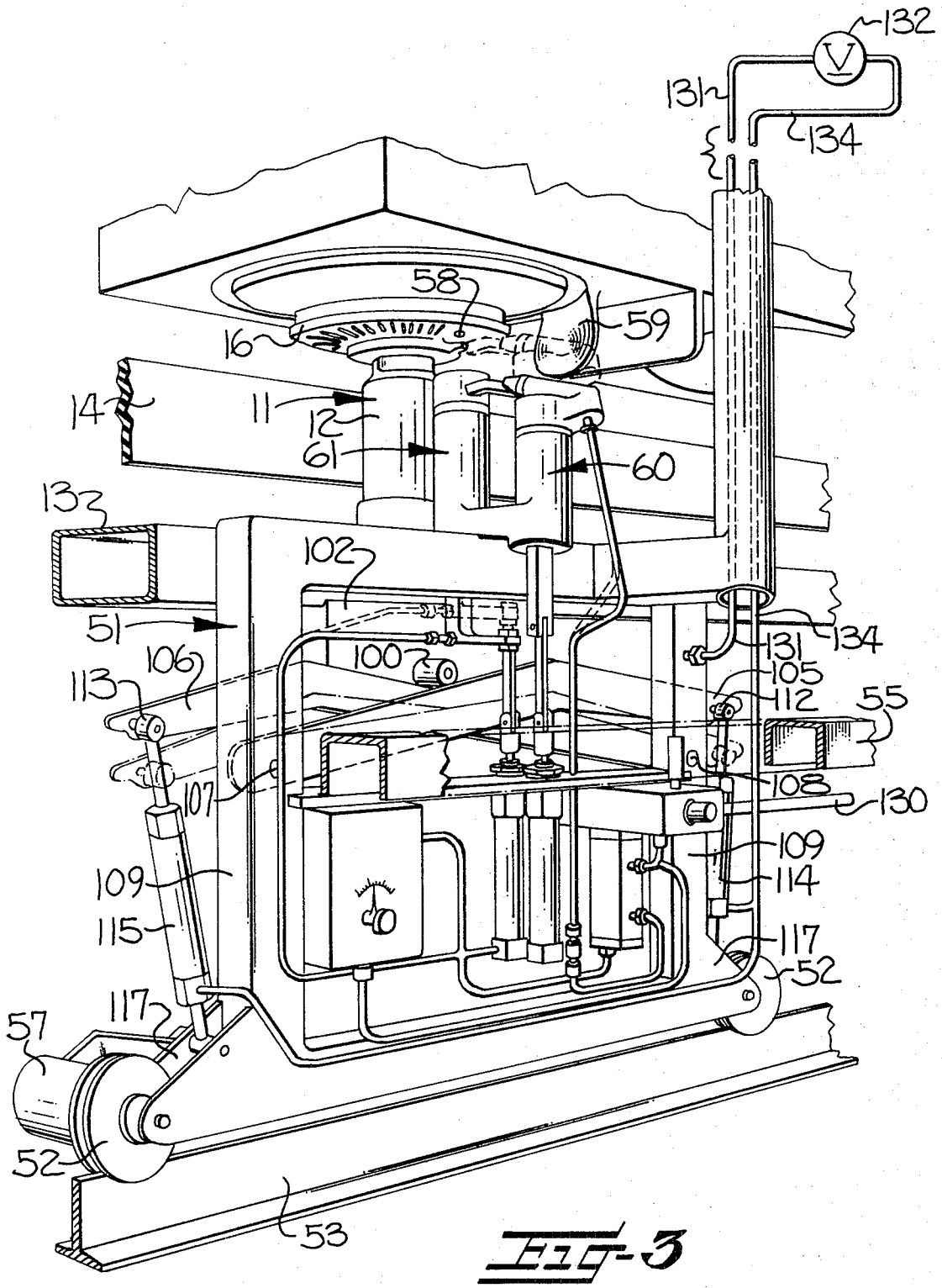
132
V
131
134
58
59
16
14
11
12
61
60
13
102
51
100
106
113
131
134
105
112
55
107
108
130
109
109
114
115
117
52
117
57
52
53

FIG-3

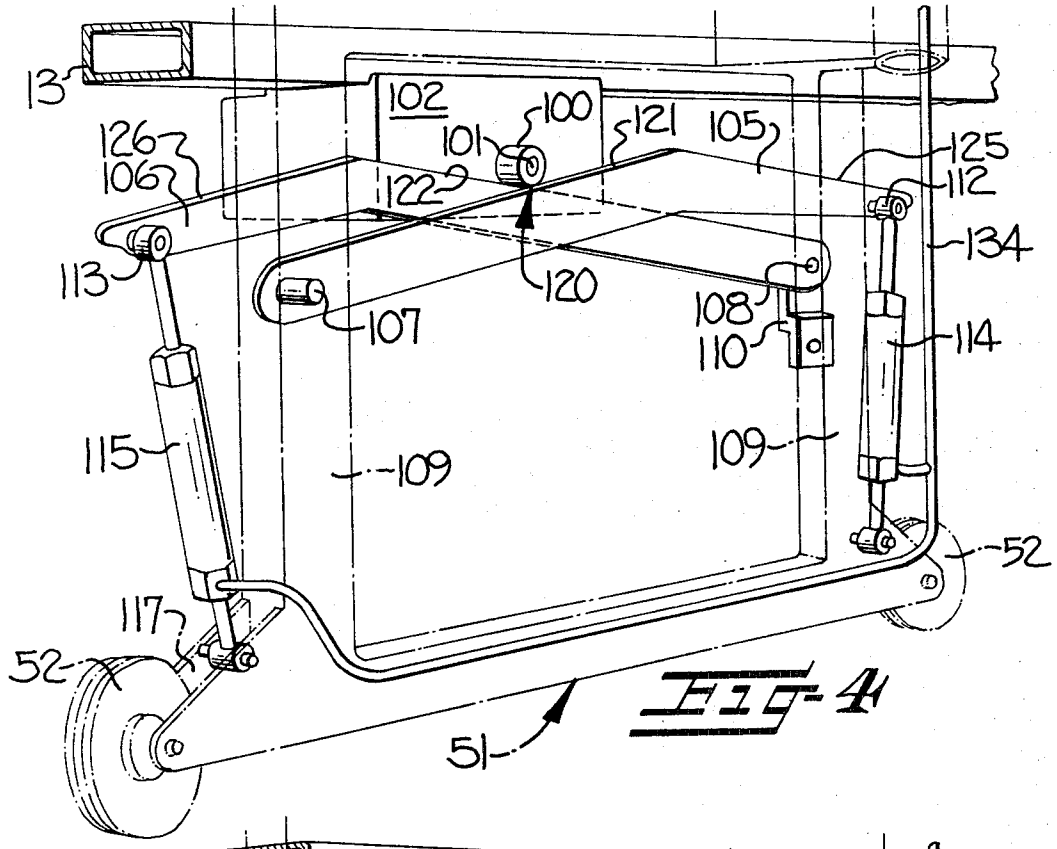
13
102
100
101
121
105
125
126
106
122
112
134
113
120
107
108
110
114
115
109
109
52
117
52
51

Fig-4

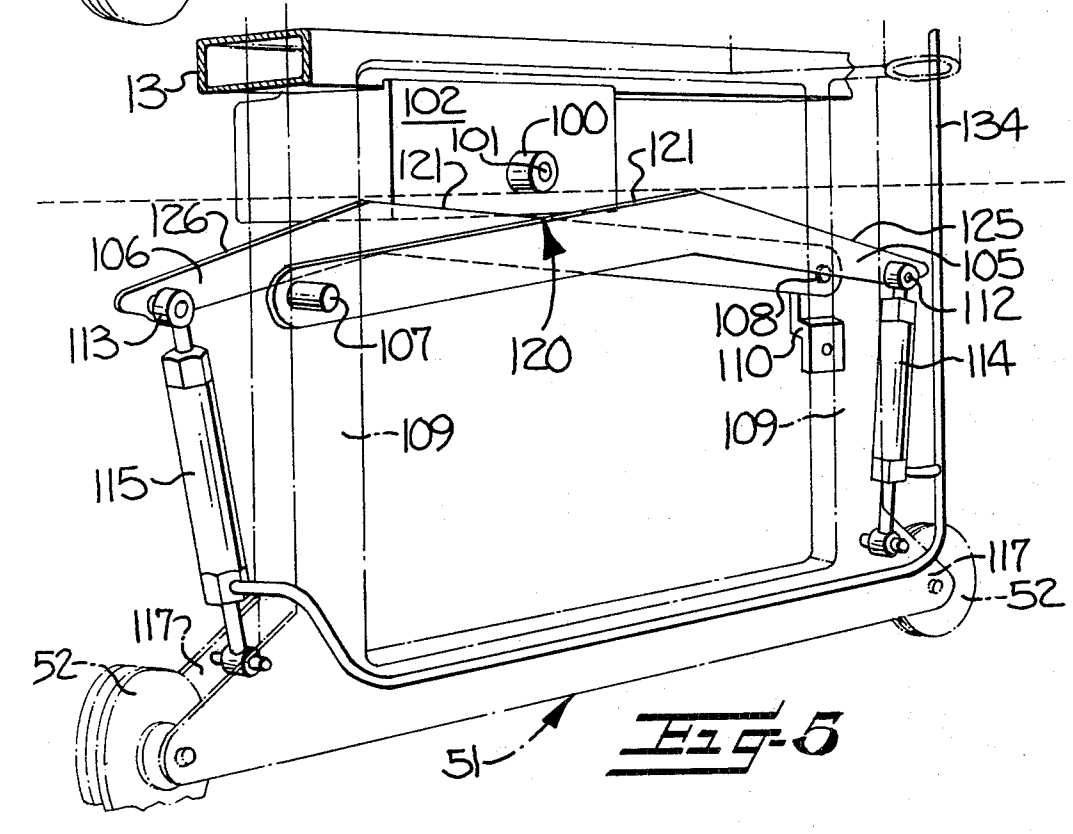
13
102
100
101
121
121
134
126
106
125
105
112
113
107
120
108
110
114
109
109
115
117
52
117
52
51

Fig-5

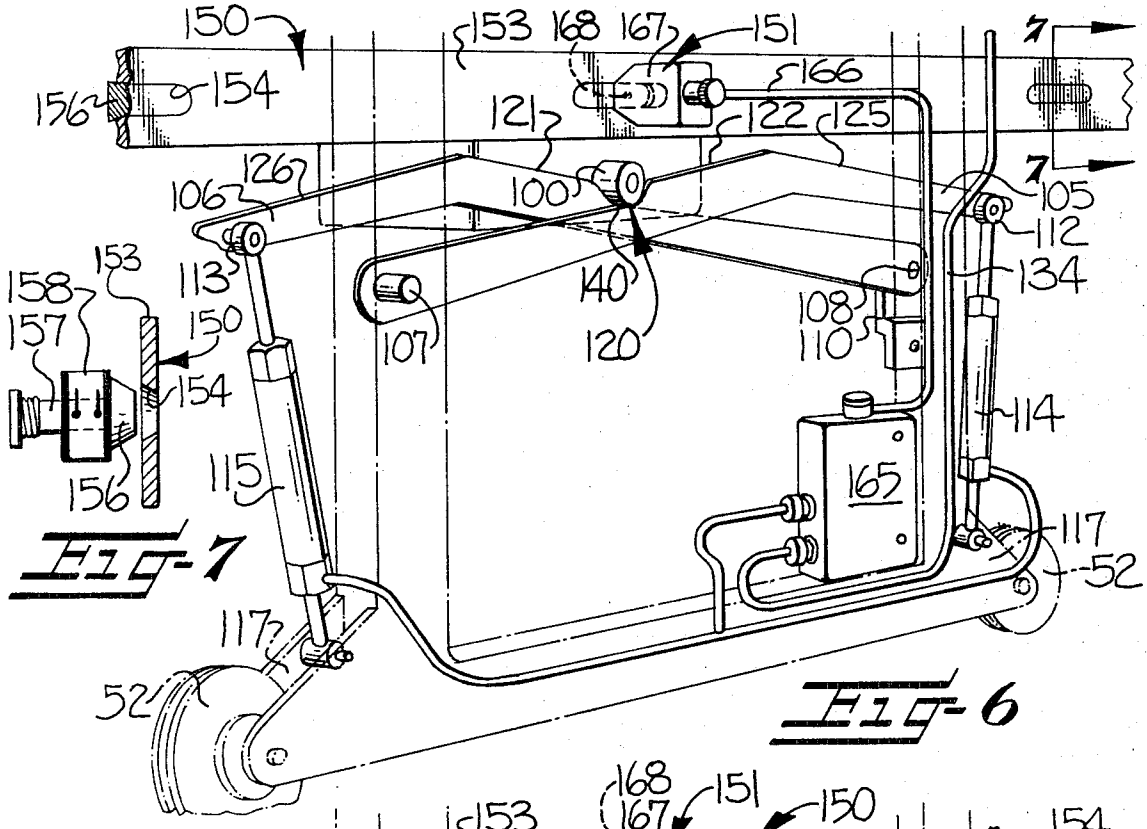

Fig-7

Fig-6

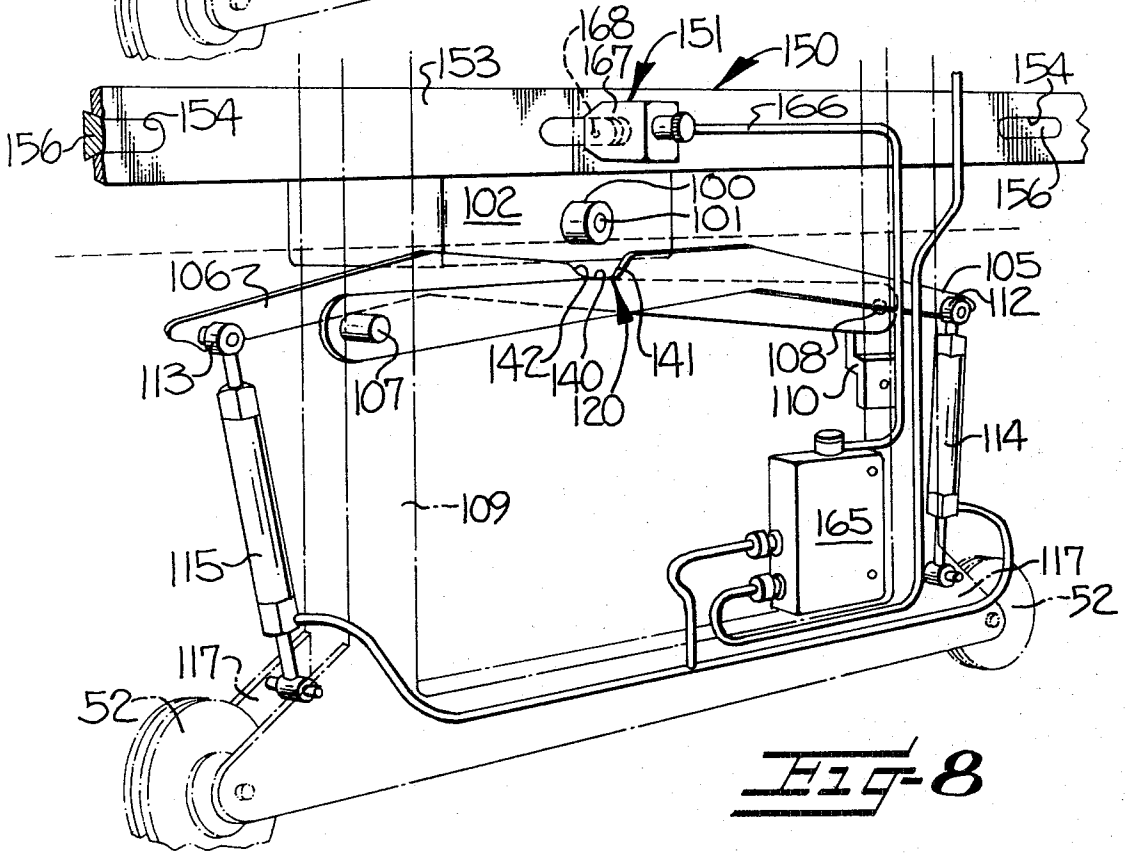

Fig-8

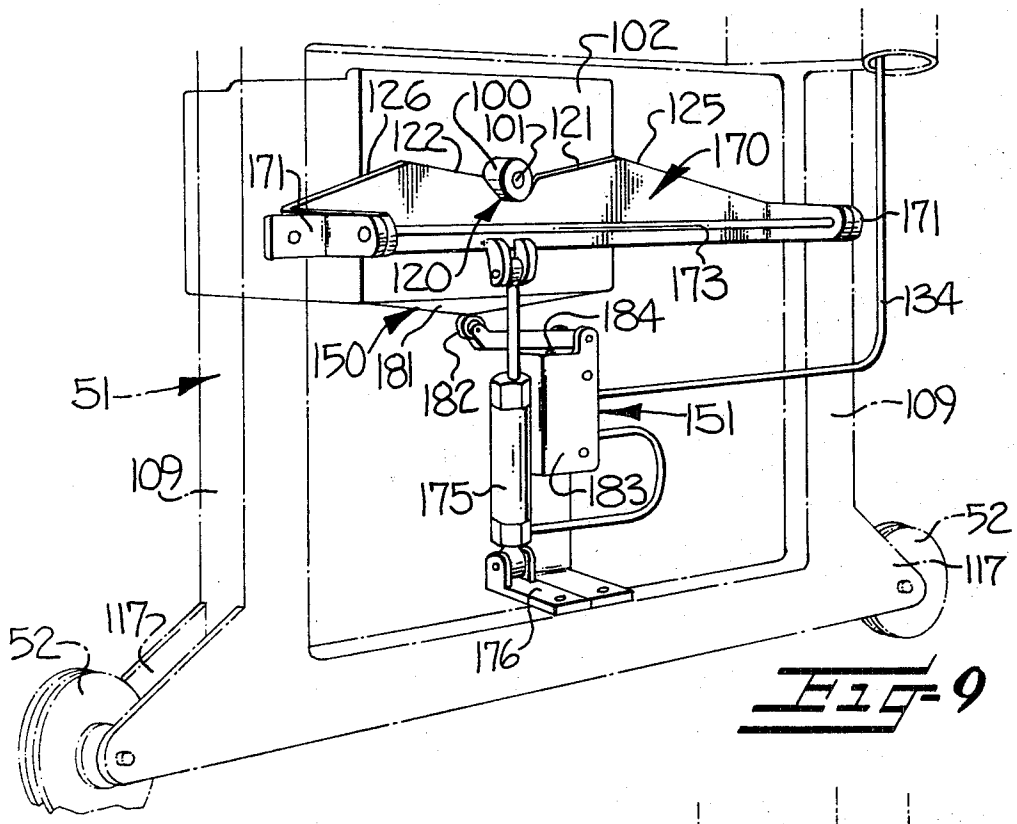
102
126
122
100
101
121
125
170
171
171
120
173
134
184
150
181
182
51
151
109
109
175
183
52
117
117
52
176

Fig-9

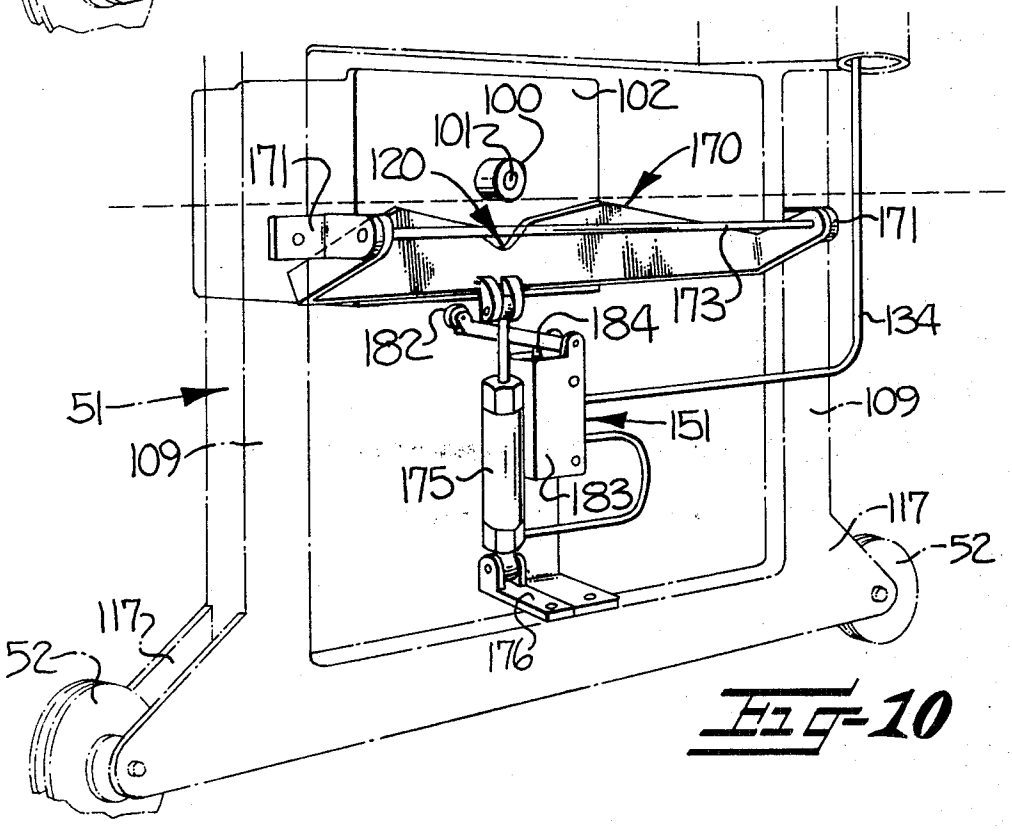
100
102
101
171
120
170
171
173
134
182
184
51
151
109
109
175
183
117
52
117
52
176

Fig-10

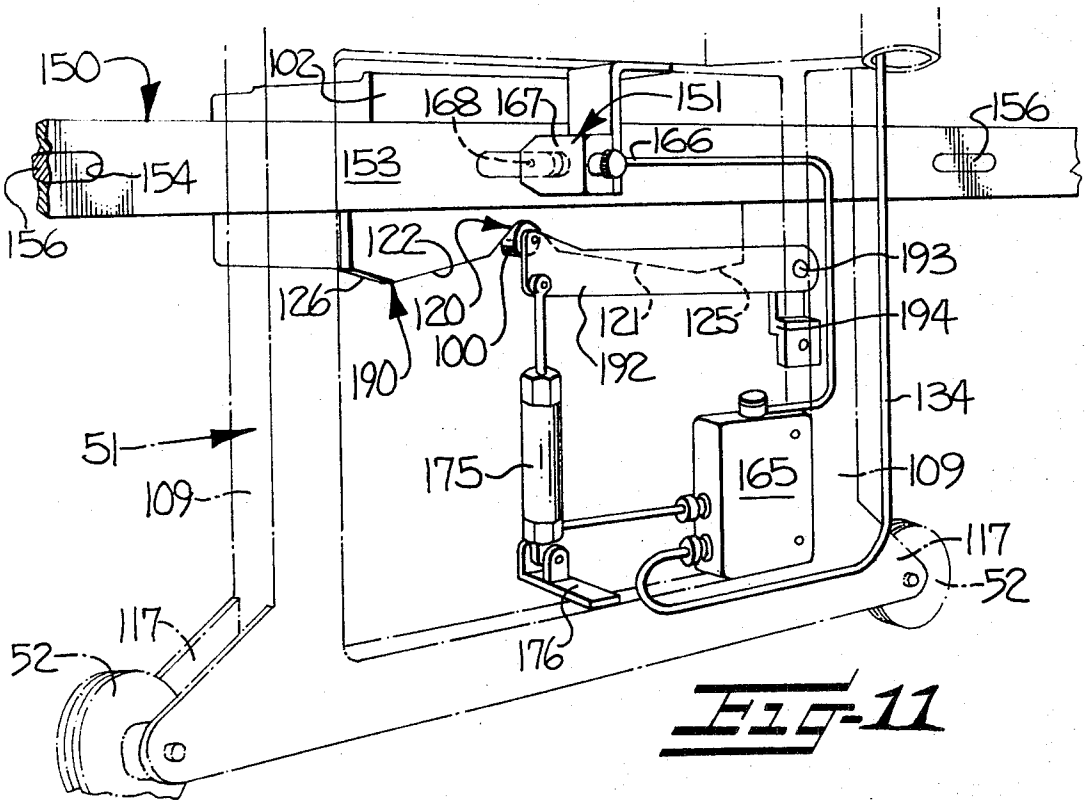
150
102
168
167
151
156
166
154
153
156
122
193
126
120
121
125
194
190
100
192
134
51
175
165
109
109
117
52
117
52
176

Fig-11

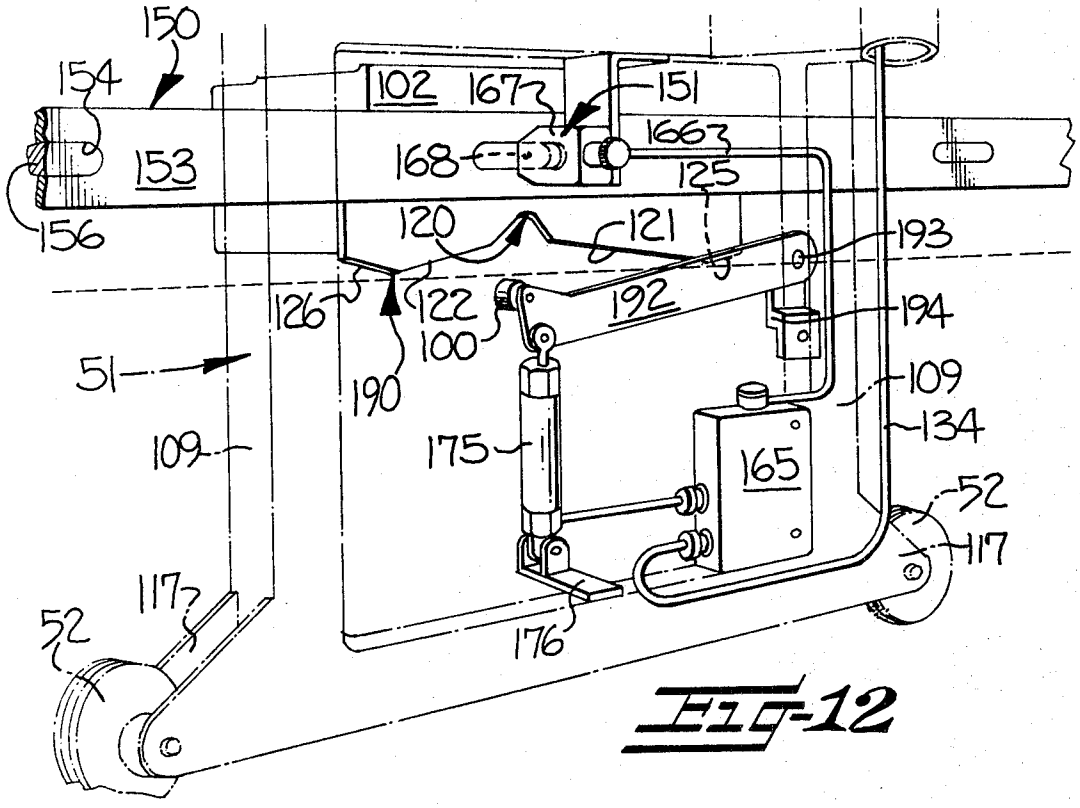
150
154
102
167
151
166
153
168
125
156
120
121
193
126
122
192
194
190
100
51
109
175
165
109
134
52
117
117
52
176

Fig-12

APPARATUS FOR POSITIONING, STOPPING AND LOCKING OF A SERVICE CARRIAGE MECHANISM OF A TEXTILE YARN PROCESSING MACHINE

This invention relates to improved mechanisms for positioning, stopping and locking a service carriage mechanism in predetermined desired locations at the front of a machine, such as a textile yarn processing machine or the like, for servicing thereof.

In the operation of textile yarn processing machines, such as twisters, pinning frames or the like, and in particular two-for-one twisters, and when the yarn being processed at a spindle assembly has broken or the supply package of yarn has been exhausted, it is necessary to stop operation of a rotating rotor mechanism forming a part of the yarn processing spindle assembly for rethreading of the yarn through the spindle assembly. Stopping of the rotation of the rotor mechanism results in the rotor mechanism coming to rest in an arbitrary position which may or may not coincide with the desired position of the rotor mechanism for threading up of the spindle assembly. Accordingly, the rotor mechanism must be re-positioned to the desired threading position. If the spindle assemblies of the yarn processing machine include pneumatically-operated yarn threading mechanisms, these threading mechanisms must be pneumatically actuated by supplying of compressed air under pressure to the pneumatic threading mechanisms when yarn threading is desired. Additionally, the broken or otherwise separated yarn in the spindle assembly must be knotted together for continued operation of the yarn processing spindle assembly.

Accordingly, it is necessary to perform the above outlined servicing functions periodically at specific spindle assembly locations. Heretofore, various mechanisms have been provided either at each spindle assembly or are manually brought to the desired spindle assembly when servicing thereof is required. This required a duplication of apparatus at each spindle assembly for the servicing thereof or the burden of an operator manually bringing the servicing apparatus to the spindle assembly when servicing is required. Also, other textile yarn processing machines and other machines have need of various types of services periodically at individual, predetermined, servicing locations, while the remainder of the machine continues to operate.

To overcome the above problems of duplicating servicing apparatus at various servicing locations of machines or the manual bringing of the service apparatus to the servicing locations, it has been heretofore proposed to provide movable service carriage mechanisms carrying servicing devices which can travel along the length of the machine and which either probe or monitor all of the desired servicing locations one after the other for their operating conditions, or is directed either according to a fixed program or as required to a given service location which needs to be serviced. In this operation, the movable carriage mechanisms come to a halt at the corresponding servicing locations and the servicing mechanisms come into operation for performing services at the desired location.

These service carriage mechanisms must be guided accurately into the desired servicing locations which has presented considerable difficulties because of the inertia forces which must be overcome in stopping and

positioning the service carriage mechanism with its servicing devices thereon. This problem was recognized in U.S. Pat. No. 3,403,866, issued Oct. 1, 1968.

In accordance with that patent, after locating a thread breakage at the operating station of a textile yarn processing machine needing servicing, the carriage mechanism is brought to a halt so that its forward motion is gradually slowed and then its direction of movement is reversed, so that it arrives at the servicing location from the reverse direction. A carriage brake and locking device are employed which include a guide rail which runs the length of the machine and which has locking cut-outs in its upper surface and has an outward-facing flange. On the carriage mechanism there is fixed a positioning switch with an outward facing spring-loaded roller which works in conjunction with the guide rail and the locking cut-outs. The cut-outs correspond to the operating positions on the machine frame which may require servicing and the roller runs on the flange of the guide rail.

In operation of the arrangement according to the aforesaid U.S. Pat. No. 3,403,866, when a thread breakage has been detected, the spring-loaded roller enters the next cut-out corresponding to the operating station needing servicing and this reverses the driving motor to slow down the carriage mechanism, stop it and then reverse its motion so that it moves backwards into the servicing position. The problem of how and when to stop the reverse motion of the carriage is solved by the use of a "positioning lock." This positioning lock consists of a conical peg pointing downwards which is normally located on the carriage mechanism over the guide-rail flange with its cut-outs. It is kept up by a horizontal lever which is fixed centrally to the armature of an electromagnet which is not normally energized.

In operation of this positioning lock of the above prior patent, when the positioning switch is closed, current is lead to the electromagnet which causes the downward pointing peg to drop slowly after a slight delay. In the meantime, the carriage has come to a halt in the forward direction and has started to move backwards so that it comes into place opposite the operating position needing servicing. Because of the corresponding distance between the cut-outs in the flange, the peg is also over a cut-out when the locking position is reached. The peg drops into the cut-out and locks the carriage in the required location for dealing with yarn breakage. The driving motor continues to run but produces no tractive effect during the servicing operation. As the peg approaches the locking cut-out, it is pressed on the upper surface of the flange of the guide rail and slides along it until it reaches the corresponding cut-out into which it drops and locates with its angled faces so that the carriage is locked to the exact position opposite the station needing to be serviced.

It is clear from the foregoing explanation that the previously known apparatus for positioning a service carriage mechanism opposite a servicing location of a machine brings with it several difficult problems.

For repeated carrying out of the servicing operations, good resistivity of the mechanisms which guide the service carriage movement is an absolute prerequisite. Normal wear on the parts of the apparatus should be such that it only has a slight effect on the accuracy of the carriage mechanisms' guidance. The guiding parts of the apparatus and the way in which the parts are ar-

ranged should be such that they can withstand continued heavy vibration such as occurs in modern high-output textile machines or other machines. In addition, these mechanisms must withstand damage due to stresses caused by their movement along the machine and caused by stopping, locating and repeated locating. Otherwise, the mechanisms will require continual repair. Consequently, the positioning, stopping and locking mechanisms for a service carriage device must be robust and not delicate and must continually insure accurate positioning, stopping and locking of the service carriage mechanism.

The prior devices for stopping and locating a service carriage mechanism, described in the above U.S. Pat. No. 3,403,866 and all others presently known, have design weaknesses which militate against long-term trouble-free operation. In the first place, the positioning switch of the prior patented device is continually running along the guide-rail flange with its cut-outs and by its nature is subjected to damage due to continuous use. In addition, the continued going into and out of the cut-outs with the associated impacts cause rapid wear on the positioning switch. If the switch fails, the positioning device fails, and with it, the whole service carriage arrangement. The complicated interaction of a large number of mechanical and electrical parts utilized in prior mechanisms are subjected to vibration by the machine being serviced and is a hindrance to trouble-free operation over a long period of time. A malfunction or a displacement of any one of these parts renders the service carriage mechanism useless for its required purpose.

Accordingly, it is the object of this invention to provide improved mechanisms for positioning, locking and stopping a service carriage mechanism in selected, predetermined, desired locations along the front of a machine for selected servicing of the machine at desired locations, which will overcome prior problems presented with such service carriage positioning, stopping and locking mechanisms and which greatly simplifies the prior construction of such mechanisms; and, more particularly, the combination of such improved mechanisms with a textile yarn processing machine, such as a twister, spinning frame, or the like having a longitudinally movable service carriage mechanism.

In accordance with the present invention, it has been found that the above objects may be accomplished by providing improved means for positioning, stopping and locking a movable service carriage mechanism in selected, predetermined, desired locations along the front of a machine in which the service carriage mechanism includes means mounting the service carriage mechanism for movement longitudinally along the front of the machine, which may be a textile yarn processing machine or other machine, and the combination of such improved positioning, stopping and locking mechanisms with a service carriage mechanism and with a textile yarn processing machine having a plurality of spindle assemblies mounted in side-by-side relationship longitudinally of said machine and which individually require servicing in the event of yarn breakage, exhausting of a supply package of yarn, etc.

The improved positioning, stopping and locking means comprise a first locking component in the form of a rotatably mounted roller, and a second cooperating locking component comprising at least one elongate member extending longitudinally of the machine being serviced and including a depression therein medially thereof for receiving the roller and cooperating therewith for stopping and locking the service carriage mechanism and inclined guide surfaces extending longitudinally outwardly from the depression and forming generally an obtuse angle from the depression for contacting and guiding the roller into the depression for positioning the service carriage mechanism.

One of the first and second locking components is mounted stationary on the machine being serviced at each of the desired predetermined servicing locations or at each of said spindle assemblies of a yarn processing machine. The other of the first and second locking components is movably mounted on the service carriage mechanism for movement between an inoperative position away from contact with the stationary locking components when positioning, stopping and locking of the service carriage mechanism is not desired and an operative position for contact with the stationary locking component when positioning, stopping and locking of the service carriage mechanism is desired. Selectively operable means are carried by the service carriage mechanism for resiliently moving the movable locking component into the operative position thereof.

Preferably, the roller is generally cylindrical shaped and the depression is shaped in the deepest portion thereof in the form of an arc of a circle generally corresponding to the diameter of the roller and the sides of the depression are in the form of tangentially inclined surfaces leading from the guide surfaces. It is also preferred for the second locking component to include oppositely inclined guide surfaces extending outwardly from the first mentioned guide surfaces for contacting and guiding the roller onto the first mentioned guide surfaces and into the depressions.

The improvements of this invention may include an indicator means carried by the machine for indicating the need for service individually for each of the predetermined servicing locations or each of the spindle assemblies, and sensing means carried by the service carriage mechanism and connected with the means for resiliently moving the movable locking component and being responsive to the indication for the need of service by the indicator means for actuating the moving means to cause operation of the means for positioning, stopping and locking the service carriage mechanism. The service carriage mechanism may include reversing drive mechanisms for driving the service carriage back and forth along the front of the machine. In this event, the sensing means is connected with the carriage drive means for stopping operation thereof in response to the indication for the need of service by the indicator means. However, the carriage mechanism may be manually moved to the general vicinity of a spindle assembly or a servicing location so that the improved means for positioning, stopping and locking the carriage mechanism in accordance with this invention may come into operation.

In one embodiment of improvements according to this invention, the first locking component comprising the rotatable roller is mounted stationary on the machine at each desired servicing location or at each spindle assembly and the second cooperating locking component is movably mounted on the service carriage mechanism and comprises two pivotally mounted elongate members positioned in scissors-like relationship

and crossing each other generally medially thereof and together forming the depression in the region of their crossing and being pivotally mounted at opposite ends on the carriage mechanism and carried at the other ends by the means for moving them into operative position.

A variation of this embodiment utilizes as the second locking component a single generally flattened U-shaped member pivotally mounted on the service carriage mechanism at respective end portions thereof and the depression and guide surfaces are formed in the medial portion thereof which extends generally longitudinally of the machine being serviced.

Another embodiment of improvements according to this invention mounts the second locking component stationary on the machine being serviced at each desired servicing location or each spindle assembly and comprises an elongate member extending longitudinally of the machine and including the depression therein medially thereof and the inclined guide surfaces extending longitudinally outwardly from the depression. In this embodiment the first cooperating locking component in the form of a rotatably mounted roller is carried on the service carriage mechanism for movement between operative and inoperative positions for operation of the positioning, stopping and locking means, as discussed above.

Thus, it may be seen by the broad descriptions above, that the embodiments of the present invention provide improved mechanisms for positioning, stopping and locking a service carriage mechanism at desired servicing locations along the front of a machine to be serviced which has overcome the problems and difficulties with prior mechanisms by providing a simple and robust construction in which no operating parts are contacting each other when servicing of the machine is not desired and which does not have a multiplicity of complicated electro-mechanical elements which become maladjusted through operation which will accurately position, stop and lock the carriage mechanism when servicing at a predetermined location is desired.

Some of the objects and advantages of this invention having been stated, other objects and advantages will appear as the description proceeds, when taken in conjunction with the accompanying drawings, in which:

FIG. **1** is a partial perspective view taken generally from the front of a portion of a two-for-one twister yarn processing machine including a plurality of spindle assemblies requiring servicing and having a longitudinally movable service carriage mechanism disposed at the front thereof and including the improved positioning, stopping and locking mechanisms of this invention thereon;

FIG. **2** is an enlarged sectional view taken generally along the line **2—2** of FIG. **1**;

FIG. **3** is an enlarged perspective view of the service carriage mechanism with the improvements of this invention thereon, as shown in FIG. **1**, and eliminating portions of the yarn processing machine;

FIG. **4** is an enlarged perspective view illustrating a first embodiment of service carriage positioning, stopping and locking mechanisms in accordance with this invention, with the locking components thereof in the operative position;

FIG. **5** is a view, like FIG. **4**, illustrating the components in the inoperative position thereof;

FIG. **6** is a view, like FIG. **4**, illustrating a variation of that embodiment and further illustrating indicating and sensing means incorporated therewith and with the locking components in the operative position thereof;

FIG. **7** is a cross-sectional view, taken generally along the line **7—7** of FIG. **6**;

FIG. **8** is a view, like FIG. **6**, with the locking components in the inoperative position thereof;

FIG. **9** is a view, like FIG. **4**, illustrating a further embodiment of positioning, stopping and locking mechanisms in accordance with this invention and with the locking components thereof in the operative position and including a further form of indicating and sensing means therewith;

FIG. **10** is a view, like FIG. **9**, with the locking components in the inoperative position thereof;

FIG. **11** is a view, like FIG. **4**, of a further embodiment of positioning, stopping and locking mechanisms in accordance with this invention with the locking components in the operative position thereof and including indicating and sensing means; and

FIG. **12** is a view, like FIG. **11**, with the locking components in the inoperative position thereof.

While the drawings and specific description to follow will be related to a two-for-one twister yarn processing machine, which is the preferred form of apparatus, having a service carriage mechanism with servicing devices thereon and movable along the front thereof and including the improved positioning, stopping and locking mechanisms according to this invention, it is to be understood that the improvements of this invention could be utilized on other types of service carriage mechanisms and with other types of machines including other yarn processing machines.

Referring now to the drawings, there is shown in FIG. **1** a portion of a two-for-one twister yarn processing machine having a plurality of spindle assemblies, generally indicated at **10**, positioned in side-by-side relationship. A full illustration and description of the entire two-for-one twister yarn processing machine and the various spindle assemblies **10** thereof is not given herein and it is not believed to be necessary for an understanding of the present invention, the operation and structure of such a two-for-one twister yarn processing machine and the plurality of spindle assemblies thereof being well understood by those with ordinary skill in the art.

Generally, each of the spindle assemblies **10**, which are conventionally mounted in side-by-side relationship in a two-for-one twister yarn processing machine, comprise a rotatably driven rotor mechanism, generally indicated at **11**. The rotor mechanism **11** includes a whorl **12** suitably rotatably mounted on the twister frame portion **13** and rotated by a continuous drive belt **14**. The rotor mechanism **11** further includes a horizontally-extending reserve disc **16** (see FIG. **2**) secured to the whorl **12** for being driven thereby and a generally vertically-extending hollow axle device (not shown) extending upwardly from the reserve disc **16**. The reserve disc **16** and hollow axle define a vertically-extending yarn passageway (not shown) extending through the hollow axle and partly through the reserve disc **16** and a horizontally-extending yarn passageway (not shown) extending through at least a portion of and out of the reserve disc **16** and mating with the vertically extending yarn passageway.

The spindle assembly **10** further includes a carrier mechanism **25** for carrying a hollow package P of yarn Y and being rotatably mounted on the rotor mechanism **11** by bearings (not shown) so that the rotor mechanism **11** may rotate relative to the carrier mechanism **25.** The carrier mechanism **25** includes a basket device **26** which surrounds the package P of yarn Y. The carrier mechanism **25** may also include a hollow yarn package carrier member **28** carried by the carrier mechanism **25** and onto which the hollow package P of yarn Y is supported. The hollow carrier **28** may also include a yarn entry tube **30** for providing a yarn passageway mating with the vertically-extending passageway and the rotor mechanism **11.**

Spindle assembly **10** further includes a balloon limitor device **33** surrounding the basket device **26** so as to contain the balloon of yarn formed on the outside of the basket device **26.** A yarn guide eyelet **40** is positioned above and in axial alignment with the hollow axle and the yarn entry tube **30.** There is further provided a pre-take-up roll **42,** a yarn traversing mechanism **43,** a take-up or package roll **44** upon which the yarn Y is wound after being processed or twisted by the spindle assembly **10.** Package roll **44** is rotated by friction drive roll **45.**

With the above described mechanisms, the yarn Y passes from the package P, through the yarn entry tube **30,** through the vertically-extending yarn passageway in the hollow axle device, through the horizontally-extending yarn passageway in the reserve disc device **16** and out of the reserve disc **16** in a horizontal direction (as shown in FIG. **2**). The yarn then passes upwardly between the basket device **26** and the balloon limitor device **33** and forms a balloon of yarn Y which is contained by the balloon limitor device **33.** The yarn then passes through a yarn guide eyelet **40,** over pre-take-up roll **42** and is traversed by the traversing mechanism **43** onto the package roll **44** to complete its travel through the respective spindle assembly. As is well understood by those with ordinary skill in the art, a two-for-one twist is inserted in the yarn during the above noted path of travel.

The drive belt **14** is maintained in engagement with the whorl **12** of the spindle assembly **10** by means of a pivotally mounted roll **15** during yarn processing by the spindle assembly **10.** When the yarn Y breaks or the supply package of yarn P is exhausted and it is desired to stop operation of the rotor mechanism **11,** the roll **15** is moved away from the belt **14** which allows it to become disengaged with the whorl **12** at a selected spindle assembly and allows the rotor mechanism **11** of that spindle assembly **10** to stop. The rotor mechanism **11** may be stopped by means of an internal expanding brake, in accordance with U.S. Pat. No. 3,269,103, issued Aug. 30, 1966 or U.S. Pat. No. 3,466,865, issued Sept. 16, 1969, both of which are assigned to the assignee of the present invention, or otherwise. This results in the rotor mechanism **11** and particularly the horizontal yarn passageway passing yarn out of the rotor mechanism **11** being stopped in an arbitrary position and usually in a position other than desired for rethreading of the spindle assembly **10.**

Each of the spindle assemblies **10,** may be pivoted with pneumatically operated, yarn threading mechanisms for threading of the yarn Y through the spindle assembly **10** when rethreading of the spindle assembly **10** due to yarn breakage or exhausting of the supply package P occurs. Such rethreading mechanisms are described in U.S. Pat. No. 3,731,478, issued May 8, 1973, and assigned to the assignee of the present invention, and reference may be had to that patent for a full disclosure of these mechanisms. Generally, these pneumatically operated air threading mechanisms include, inter alia, an air channel (not shown) formed in the reserve disc **16** of the rotor mechanism **11** and a port **58** (see FIG. **3**) on the underside of the reserve disc **16** of the rotor mechanism **11** for selectively receiving air under pressure into the air channel. The air channel communicates with the horizontally-extending yarn passageway in the reserve disc **16** of the rotor mechanism **11** so that, when the air channel receives air under pressure, it will cause a positive air stream through the horizontally extending air passageway and a negative air stream through the vertically extending passageway. A negative air stream will also be created through the yarn entry tube **30.**

For rethreading of the yarn Y through the spindle assembly **10,** the yarn Y may be placed at the entrance to the yarn entry tube **30** and will be sucked into and pulled through the yarn entry tube **30** and the vertically extending yarn passageway by negative pressure and the yarn will then be forced through and out of the horizontally-extending passageway by a positive air stream. When the rotor mechanism is properly positioned, the emitted yarn Y and positive air stream will strike a deflector plate **59** (see FIG. **3**) positioned on the bottom of the balloon limitor **33** and cause the yarn Y and positive air stream to flow up between the basket device **26** and the balloon limitor device **33** carrying the yarn Y upwardly for continued threading through the spindle assembly **10.** Other devices for automatically threading the yarn Y are disclosed in the above mentioned U.S. Patent.

The end of the yarn Y emerging from the top of the balloon limitor **33** and basket device **26** may require knotting with a broken or otherwise separated yarn end extending downwardly from the package **44** of yarn Y through the guide **40.**

Thus it may be seen, that in order for a spindle assembly **10** of the two-for-one twister yarn processing machine to be started back up after yarn breakage or the exhausting of a supply package P of yarn Y, certain servicing is required to be performed at the respective spindle assembly. These services include re-positioning of the rotor mechanism **11** in the proper rethreading position, actuation of the pneumatic threading devices by creating a stream of compressed air through these devices and knotting of separated yarn ends at the top of the balloon limitor mechanism **33** in the event of yarn breakage.

For supplying these services, a service carriage mechanism **51** is supported by wheels **52** on a longitudinally extending rail **53** carried by the yarn processing machine generally at the front of the spindle assemblies **10.** The carriage **51** is further supported by U-shaped frame member **55** into which a guiding member **56** extends from the carriage mechanism **51.** Thus, the carriage mechanism **51** is mounted for longitudinal movement along the front of the yarn processing machine and the spindle assemblies **10** thereof. The carriage mechanism **51** may be manually moved along the front of the spindle assemblies **10** or it may be motorized by the provision of an electric or other type of motor **57** attached to one of the wheels **52** (as shown in FIG. **3**).

This motor **57** is preferably of the reversing type and will contact a switch (not shown) at the respective ends of the yarn processing machine for reversing its drive and thus reversing the movement of the carriage mechanism **51** so that it continually moves back and forth along the front of the yarn processing machine and the spindle assemblies **10.**

The service carriage mechanism **51** carries devices, generally indicated at **60** for re-positioning the spindle rotor mechanism **11** in the desired rethreading position upon the stopping of the rotor mechanism **11** in an undesired position. Also, the service carriage mechanism carries selectively actuatable mechanisms **61** for pneumatically actuating the pneumatically operated yarn threading mechanisms, described above. These re-positioning and threading actuating mechanisms **60, 61** carried by the service carriage mechanism **51** form the subject matter of another invention set forth in co-pending United States Patent application, Ser. No. 407,504, filed oct. 18, 1973, and reference may be had to that application for complete operation of these devices.

Also, the service carriage mechanism **51** carries an automatically driven yarn knotting mechanism **63** for knotting together two ends of broken or otherwise separated yarn Y. This mechanism also forms the subject matter of a separate invention set forth in co-pending United States Patent application, Ser. No. 400,336, filed Sept. 24, 1973, and reference may be had to that application.

Thus it may be seen, that the service carriage mechanism **51** carries selectively actuatable devices **60, 61** and **63** for performing desired services at selected spindle assembly locations in the two-for-one twister yarn processing machine when the service carriage mechanism **51** is positioned and stopped at the selected spindle assembly **10.**

In accordance with the present invention, improved means for positioning, stopping and locking the service carriage mechanism **51** in a predetermined desired location at the front of a selected spindle assembly **10** for allowing servicing thereof is provided, as follows.

In the description to follow, there will be described several embodiments of the improved positioning, stopping and locking means according to this invention with various alternative features on each embodiment and it is to be understood that various features from one embodiment may be used on another embodiment and visa versa. All of these embodiments include certain common features which will not be described with respect to each embodiment and like reference numerals will be used in each embodiment for common features therein. Also, in FIGS. **1 – 3,** there is shown certain mechanisms, including pneumatic air conveying circuits, valves, piston-cylinder units, etc. which relate to the operation of the servicing devices **60, 61, 63,** discussed above, and these devices will not be specifically described herein and reference may be had to the co-pending applications identified above for descriptions of these devices.

Referring firstly to the embodiment of this invention, specifically shown in FIGS. **1–5,** this first embodiment of improved means for positioning, stopping and locking the service carriage **51** in a predetermined desired location comprises a first locking component in the form of a roller **100** rotatably mounted by stub shaft **101** on a housing block **102** secured to the underside of yarn processing machine frame **13.** One of these housing blocks **102** and roller locking component **100** is positioned in front of each of the spindle assemblies **10** of the two-for-one twister yarn processing machine or at the desired servicing locations of any machine.

A second locking component comprising two elongate members **105** and **106** is provided in which opposite ends of the elongate members **105, 106** are pivotally mounted by stub shafts **107** and **108** to upstanding frame portions **109** of the service carriage mechanism **51.** The pivoted end of the elongated member **106** is spaced out somewhat from the vertical frame member **109** by an angle bracket **110** which corresponds generally to the thickness of the elongate member **105** so that the two elongate members can be moved directly past each other without interference. The other ends of the two elongate members **105, 106** are pivotally mounted at **112** and **113** to the piston rods of respective piston-cylinder units **114, 115,** respectively. The other ends of the piston-cylinder units **114, 115** are pivotally mounted on a generally horizontally extending frame portion **117** of service carriage mechanism **51.**

The elongate members **105, 106** are positioned in scissors-like relationship for crossing each other generally medially thereof and form a depression **120** in the region of their crossing. From the depression **120,** inclined guide surfaces **121** and **122** are formed on the respective elongate members **105, 106** and extend longitudinally outwardly from the depression **120** and form generally an obtuse angle from the depression **120.** The elongate members **105, 106** further define oppositely inclined guide surfaces **125** and **126,** respectively, which extend outwardly from the first mentioned guide surfaces **121, 122** and in a generally downward or opposite direction.

The elongate members **105, 106** are normally maintained in an inoperative position (as shown in FIG. **5**) away from contact with the stationary roller locking component **100** when positioning, stopping and locking of the service carriage mechanism **51** is not desired.

However, when positioning, stopping and locking of the service carriage mechanism **51** is desired, compressed air will be fed to the bottom of piston-cylinder units **114, 115** to cause the piston rods thereof to move upwardly causing upward movement of the respective members **105, 106** to bring these members into contact with the roller locking component **100.** The air pressure within the piston-cylinder units **114, 115** is such that it maintains the elongate locking component members **105, 106** resiliently in engagement with the roller locking component **100.** When the service carriage mechanism is manually or automatically moved to the general vicinity of stationary roller locking component **100,** the roller locking component **100** will come into contact with the guide surfaces **121** or **122** and will roll down these guide surfaces **121** or **122** into the depression **120.** This effects a proper positioning of the service carriage mechanism **51** and a stopping and locking of the service carriage mechanism **51** in the proper position in front of a respective spindle assembly **10.**

If, however, the service carriage mechanism **51** is further away from the spindle assembly **10** and the guide surfaces **121, 122** of elongate locking component members **105, 106,** the roller locking component **100** will first come into contact with guide surfaces **125** or **126** so that service carriage mechanism **51** may be gently pushed or driven, against the resiliency of piston-

cylinder units **114, 115,** to cause the roller locking component **100** to smoothly ride up the guiding surfaces **125** or **126** and then come into contact with the downwardly inclined guiding surfaces **121** or **122** for positioning, stopping and locking of the service carriage mechanism **51** in its predetermined desired servicing position.

Thus, the force of movement for positioning the service carriage mechanism **51** in the correct desired position in front of a spindle assembly **10** is effected by the resiliency of elongate locking component members **105, 106** bearing against the stationary roller locking component **100** and provided by pneumatic, piston-cylinder units **114, 115.** This arrangement avoids a sudden shock stop of the carriage mechanism **51** and allows a smooth guiding of the carriage mechanism **51** to correctly position the same and stop and lock the carriage mechanism **51** in its desired position.

For moving the elongate movable locking component members **105, 106** into their operative position (as shown in FIG. **4**) by the pneumatic piston-cylinder units **114, 115,** the air under pressure is continually supplied to the service carriage mechanism **51** by a supply line **130** (see FIG. **3**) from any convenient source of supply to fill the hollow frame portions **109** of the service carriage mechanism **51** with compressed air to serve as a source of compressed air. This compressed air leads from the hollow frame portions **109** through an air conveying line **131** to a manually actuated or otherwise actuated valve **132** positioned on an extension of service carriage mechanism **51** (as shown in FIG. **2**). The valve **32** may be manually or otherwise opened by actuating levers **133** to allow the flow of air through an air conveying line **134** which leads to the bottom of piston-cylinder units **114, 115** for actuation thereof to move the elongate locking component members **105, 106** to the operative position (shown in FIG. **4**). The pressure of the compressed air fed to these piston-cylinder units **114, 115** is regulated so as to provide the desired resiliency, discussed above.

After the service carriage mechanism **51** has been positioned, stopped and locked at the desired servicing location and the servicing functions have been accomplished, the positioning, stopping and locking mechanism may be deactuated by again manually or otherwise operating the valve **132** to cut off the flow of air through air conveying line **134** to the piston-cylinder units **114, 115** and allow the piston rods thereof and the elongate movable locking component members **105, 106** to retract to their inoperative position (as shown in FIG. **5**). This retraction may be accomplished by the force of gravity or the piston-cylinder units **114, 115** may include a spring internally thereof for accomplishing this retraction.

Referring now to FIGS. **6 – 8,** the embodiment shown therein is generally similar to that of FIGS. **4** and **5** except that the depression **120** is shaped in the deepest portion **140** thereof in the form of an arc of a circle and the sides of the depression are in the form of tangentially inclined surfaces **141** and **142** leading from the guide surfaces **121, 122,** respectively. Inasmuch as the depression **120** is formed by both of the elongate locking component members **105, 106,** one-half of the deepest portion of the depression **120** forming the arc of a circle **140** and one of the tangentially inclined surfaces **141, 142** is formed on each of the elongate members **105, 106,** respectively so that the depression **120** is formed in the shape described above when the movable elongate locking component members **105, 106** are moved to their operative position (shown in FIG. **4**).

The stationary roller locking component **100** is generally cylindrical shaped and the arc of the circle **140** forming the deepest portion of the depression **120** corresponds generally in diameter to the diameter of the cylindrical roller **142.** This construction provides an extremely shock-free or smooth shuttling for positioning, stopping and locking of the carriage mechanism **51** into its servicing position.

As shown in this embodiment of FIGS. **6 – 8,** there is provided indicator means, generally indicated at **150,** carried by the yarn processing machine for indicating the need for service individually for each of the spindle assemblies **10,** and a sensing means, generally indicated at **151,** carried by the service carriage mechanism **51** and connected with the mechanisms for resiliently moving the movable locking components **105, 106** nd being responsive to the indication for the need of service by the indicator means **150** at a particular spindle assembly location for actuating the mechanisms for moving the locking components **105, 106** into their operative position to cause operation of the mechanisms for positioning, stopping and locking the service carriage mechanism **51** at the desired spindle assembly location.

The form of the indicator means **150** and sensing means **151** illustrated in FIGS. **6 – 8** is as follows. The indicator means **150** comprises an elongate strip **153** extending longitudinally along the length of the yarn processing machine and secured thereto and having an aperture **154** therein at the front of each of the spindle assemblies **10.** The indicator means further include a separate movable closure device for each of the apertures **154** in the form of a plunger **156** having the shape of the aperture **154** and secured to the end of a shaft **157** extending from a suitable solenoid **158** or other device for moving the plunger **156** from a position within the aperture **154** for closing the aperture **154** when service is not needed at that particular spindle assembly location to a position out of the aperture **154** to indicate the need for service at that specific spindle assembly location. The solenoid or plunger moving device **158** may be actuated by any suitable mechanism in the spindle assembly or otherwise, such as for example, a yarn feeler electrical switch device **160** (see FIG. **2**) which upon the breakage of yarn or the absence of feeling of yarn Y passing therethrough will operate a switch to energize solenoid **158** and cause movement of the plunger mechanism **160** out of the aperture **154** of the strip **153** at a particular spindle assembly location.

The sensing means **151** comprises a pneumatically-operated control valve **165** disposed in the air conveying line **134** which upon actuation opens to allow the flow of air therethrough to the piston-cylinder units **114, 115.** The sensing means **151** further includes a pneumatic air conveying line **166** leading from a sensing head **167** which has an orifice **168** in the front thereof in engagement with the strip **153.** The air conveying line **166,** sensing head **167** and orifice **168** are maintained under constant pressure, but air can only flow out of the orifice **168** when it comes in contact with an open aperture **154** in which the plunger mechanism **156** has been moved away from the aperture **154** to indicate the need of service. The sensing head **167**

and orifice **168** are substantially sealed by the strip **153** to prevent the flow of air out of the orifice **168** until it comes into contact with an open aperture **154.** When this occurs, the valve **165** will be actuated due to the drop in back-pressure in the valve to open the flow of air into air lines **134** to move the locking components **105, 106** into engagement with the locking component **100.**

Thus, in operation, as the service carriage **51** is moved along the front of the spindle assemblies **10,** either manually or automatically by motor **57,** the sensing head **167** and orifice **168** will move along the strip **153** until the orifice **168** comes into contact with an open aperture **154** in the strip **153** which indicates the need for service at a particular spindle assembly location. When this occurs, a back-pressure will be established in the air conveying line **166** to operate the pneumatically controlled valve **165** to open the valve **165** and allow the flow of air through the air conveying lines **134** to the pneumatically-operated piston-cylinder units **114, 115** to move the movable elongate locking component members **105, 106** from their inoperative position (shown in FIG. **8**) to their operative positions (shown in FIG. **6**) for effecting positioning of the service carriage mechanism by the roller **100** riding down the inclined surfaces **121** or **122** and stopping and locking of the service carriage **51** in the desired servicing position by the roller **100** being received in the depression **120.**

If the service carriage is automatically moved by a motor mechanism **57,** the sensing head **167** may include a suitable switch or other means connected to the motor **57** for stopping operation of the motor **57** to allow the carriage mechanism **51** to be stopped. Any suitable arrangement may be utilized such as a clutch on the motor **57** or a pneumatically-operated brake or clutch controlled by the sensing head **167.**

Thus it may be seen that the positioning, stopping and locking mechanisms of this invention may include indicating and sensing means for automatically putting these mechanisms into operation upon the indication of a need for service at a particular spindle assembly location and these means may be used with any embodiment of this invention.

Referring now to the embodiment of this invention illustrated in FIGS. **9** and **10,** the movable elongate locking component is in the form of a single generally flattened U-shaped member **170** pivotally mounted at the outer ends thereof on brackets **171** secured to upstanding frame portions **109** of the service carriage mechanism **51.** In this embodiment, the depression **120,** guide surfaces **121, 122** and **125, 126** are formed on the flattened medial portion of the U-shaped member **170.** The depression **120** may be in the shape described with respect to the embodiment of FIGS. **6 – 8.** The U-shaped locking component member **170** may be stabilized for pivoting movement by a longitudinally extending shaft **173.**

For movement of the locking component member **170** from the inoperative position (shown in FIG. **10**) to the operative position, (shown in FIG. **9**), a single pneumatically-operated, piston-cylinder unit **175** is utilized. This piston-cylinder unit **175** is mounted on a bracket **176** attached to the service carriage mechanism **51** and the extendable piston rod of the piston-cylinder unit **175** is attached generally to the medial portion of locking component member **170.** Air under pressure is fed to the bottom of the piston-cylinder unit **175** by the air conveying line **134,** as discussed above, for actuation thereof and movement of the locking component member **170** into contact with the stationary roller locking component **100** for the purposes described above.

In this embodiment, an alternative form of indicator means **150** is utilized in the form of a cam **181** secured to the bottom of housing block **102.** The cam **181** may be mounted for movement from an inoperative position where service is not required at a specific spindle assembly location to an operative position (as shown in FIG. **9**) when servicing is required. The sensing mechanism **151** of this embodiment comprises a cam follower **182** pivotally mounted on a valve **183** for engaging a plunger **184** of the valve **183** when the cam follower **182** comes in engagement with the cam **181** for opening the valve **183.** The valve **183** is disposed in the air conveying line **134** so as to prevent the flow of air to the piston-cylinder unit **175** until opened by the cam follower **182** and the plunger **184.** Any suitable arrangement for bringing the cam **181** and the cam follower **182** into engagement with each other when service is desired at a specific location may be utilized in this embodiment.

Referring now to the embodiment of this invention illustrated in FIGS. **11** and **12,** the stationary locking component carried by the housing block **102** is in the form of an elongate member **190** which includes the depression **120** medially thereof on a bottom surface thereof and guide surfaces **121, 122** and **125, 126** extending outwardly therefrom, as described above. The movable locking component of this embodiment comprises the rotatably mounted roller **100** carried on the end of a lever arm **192** which is pivotally mounted at **193** to a bracket **194** carried by the upstanding portion **109** of the service carriage mechanism **51.** The movable roller locking component **100** is moved from an inoperative position (as shown in FIG. **12**) to the operative position in contact with the stationary elongate locking member **190** (as shown in FIG. **11**) by a single pneumatic piston-cylinder mechanism **175,** as utilized in the embodiment of FIGS. **9** and **10.** Air is conveyed to the bottom of piston-cylinder unit **175** by air conveying line **134.** This embodiment also includes service indicating means **150** along with sensing means **151** including valve **165** positioned in air conveying line **134.** Operation of this embodiment is as described above in connection with the other embodiments.

Thus it may be seen, that this invention has provided several alternative embodiments with alternative features in connection with each embodiment which may be used on other embodiments, which overcome the above enumerated problems with prior mechanisms and provide a simplified, robust, accurate, wear resistant, etc. construction of mechanisms for positioning, stopping and locking a service carriage mechanism in desired servicing positions.

In the drawings and specification, there have been set forth preferred embodiments of the invention and, although specific terms are employed, they are used in a generic and descriptive sense only and not for purposes of limitation.

What is claimed is:

1. In a textile yarn processing machine, such as a twister, spinning frame or the like, having a plurality of spindle assemblies mounted in side-by-side relationship

longitudinally of said machine and which individually require servicing in the event of yarn breakage, exhausting of a supply package of yarn, etc.; the combination therewith of a movable service carriage mechanism carrying means for selectively servicing desired individual spindle assemblies, means mounting said service carriage mechanism for movement longitudinally along the front of said machine and said spindle assemblies, and means for positioning, stopping and locking said service carriage mechanism in a predetermined desired location at the front of a selected spindle assembly for servicing thereof, said positioning, stopping and locking means comprising:

a first locking component comprising a rotatably mounted roller;

a second cooperating locking component comprising at least one elongate member extending longitudinally of said machine and including a depression therein medially thereof for receiving said roller and cooperating therewith for stopping and locking said service carriage mechanism, and inclined guide surfaces extending longitudinally outwardly from said depression and forming generally an obtuse angle from said depression for contacting and guiding said roller into said depression or positioning said service carriage mechanism;

one of said first and second locking components being mounted stationary on said machine at each of said spindle assemblies in a predetermined position and the other of said first and second locking components being movably mounted on said service carriage mechanism for movement between an inoperative position away from contact with said stationary locking component when positioning, stopping and locking of said service carriage mechanism is not desired and an operative position for contact with said stationary locking component when positioning, stopping and locking of said service carriage mechanism is desired; and

selectively operable means carried by said service carriage mechanism for resiliently moving said movable locking component into the operative position.

2. In a textile yarn processing machine, as set forth in claim **1**, in which said roller is generally cylindrical shaped and said depression is shaped in the deepest portion thereof in the form of an arc of a circle generally corresponding to the diameter of said roller and the sides of said depression being in the form of tangentially inclined surfaces leading from said guide surfaces.

3. In a textile yarn processing machine, as set forth in claim **1**, in which said second locking component further includes oppositely inclined guide surfaces extending outwardly from said first mentioned guide surfaces for contacting and guiding said roller onto said first-mentioned guide surfaces and into said depression.

4. In a textile yarn processing machine, as set forth in claim **1**, further including indicator means carried by said machine for indicating the need for service individually for each of said spindle assemblies, and sensing means carried by said service carriage mechanism and connected with said means for resiliently moving said movable locking component and being responsive to the indication for the need of service by said indicator means for actuating said moving means to cause operation of said means for positioning, stopping and locking said service carriage mechanism.

5. In a textile yarn processing machine, as set forth in claim **4**, further including reversing drive means connected to said service carriage mechanism for driving said service carriage mechanism back and forth along the front of said machine, and in which said sensing means is connected with said carriage drive means for stopping operation thereof in response to the indication for the need of service by said indicator means.

6. In a textile yarn processing machine, as set forth in claim **1**, in which said means for resiliently moving said movable locking component comprises at least one pneumatically-operated, piston-cylinder unit carried by said service carriage mechanism and attached to said movable locking component and selectively actuatable, air circuit means for supplying compressed air to said piston-cylinder unit for actuation thereof for moving said movable locking component into engagement with said stationary locking component and resiliently maintaining such contact during movement of said roller along said inclined guide surfaces and into said depression.

7. In a textile yarn processing machine, as set forth in claim **6**, further including indicator means carried by said machine for indicating the need for service of each of said spindle assemblies and comprising longitudinally extending strip means carried by said machine and extending along the front of each of said spindle assemblies and having an aperture therein at the front of each of said spindle assemblies and a movable closure means for each of said apertures for moving between an inoperative position within said aperture of said strip means for closing same when service of the respective spindle assembly is not needed and an operative position withdrawn from said aperture in said strip means when servicing of said respective spindle assembly is desired, and sensing means carried by said service carriage mechanism for passing along said strip means of said indicator means and connected with said air circuit means for actuating said air circuit means, said sensing means comprising a pneumatically-operated control valve connected in said air circuit means for initiating the flow of air therethrough and to said piston-cylinder unit when actuated and a pneumatic air conveying line having an orifice at one end thereof and connected at the other end thereof with said pneumatically operated valve, said orifice being in engagement with said strip means to be substantially closed by said strip means and to be opened when said orifice comes into engagement with one of said apertures in which said closure means has been moved thereaway to the operative position thereof for pneumatically actuating said control valve for actuating said cooperating locking elements and thus operating said positioning, stopping and locking means.

8. In a textile yarn processing machine, as set forth in claim **6**, further including indicator means carried by said machine for indicating the need for service of each of said spindle assemblies and comprising cam means extending along the front of each of said spindle assemblies, and sensing means carried by said service carriage mechanism for passing along the front of said spindle assemblies and connected with said air circuit means for actuating said air circuit means, said sensing means comprising cam follower means for engaging said camming means when servicing of a spindle assem-

bly is desired and control valve means connected with said cam follower means and with said air circuit means for initiating the flow of air through said air circuit means and to said piston-cylinder unit when actuated by said cam follower means for actuating said cooperating locking elements and thus operating said positioning, stopping and locking means.

9. In a textile yarn processing machine, such as a twister, spinning frame or the like, having a plurality of spindle assemblies mounted in side-by-side relationship longitudinally of said machine and which individually require servicing in the event of yarn breakage, exhausting of a supply package of yarn, etc.; the combination therewith of a movable service carriage mechanism carrying means for selectively servicing desired individual spindle assemblies, means mounting said service carriage mechanism for movement longitudinally along the front of said machine and said spindle assemblies, and means for positioning, stopping and locking said service carriage mechanism in a predetermined desired location at the front of a selected spindle assembly for servicing thereof, said positioning, stopping and locking means comprising:

a first locking component comprising a roller rotatably mounted stationary on said machine at each of said spindle assemblies in a predetermined position;

a second cooperating locking component movably mounted on said service carriage mechanism for movement between an inoperative position away from contact with said stationary first locking component at each of said spindle assemblies when positioning, stopping and locking of said service carriage mechanism is not desired and an operative position for contact with said stationary locking component when positioning, stopping and locking of said service carriage mechanism is desired, said second locking component comprising at least one elongate member extending longitudinally of said machine and including a depression therein medially thereof for receiving said roller and cooperating therewith for stopping and locking said service carriage mechanism and inclined guide surfaces extending longitudinally outwardly from said depression and forming generally an obtuse angle from said depression for contacting and guiding said roller into said depression for positioning said service carriage mechanism and

selectively operable means carried by said service carriage mechanism for resiliently moving said movable second locking component into the operative position thereof for engagement between said movable second locking component and said stationary first locking component during the guiding and positioning of said roller in said depression.

10. In a textile yarn processing machine, as set forth in claim **9**, in which said second locking component comprises two pivotally mounted elongate members positioned in scissors-like relationship and crossing each other generally medially thereof and together forming said depression in the region of their crossing.

11. In a textile yarn processing machine, as set forth in claim **10**, in which opposite ends of said elongate members are pivotally mounted on said service carriage mechanism, and in which said means for moving said second locking component comprises pneumatically-operated, piston-cylinder units carried by said service carriage mechanism and connected respectively to the other opposite ends of said elongate members, and selectively-actuatable air circuit means for supplying compressed air upon actuation thereof to said piston-cylinder units for moving said elongate members to the operative position of said second locking component.

12. In a textile yarn processing machine, as set forth in claim **11**, in which said roller forming said first locking component is generally cylindrical shaped and said depression in said second locking component is shaped in the deepest portion thereof in the form of an arc of a circle generally corresponding to the diameter of said roller and the sides of said depression being in the form of tangentially inclined surfaces leading from said guide surfaces, said depression being formed when said two elongate members are moved to the operative position thereof and one-half of said depression including one-half of the arc of the circle and one tangentially inclined surface being formed in each of said elongate members, respectively.

13. In a textile yarn processing machine, as set forth in claim **9**, in which said second locking component comprises a single generally flattened U-shaped member pivotally mounted on said service carriage mechanism at the respective end portions thereof and said depression and said guide surfaces being formed in the medial portion thereof which extends generally longitudinally of said machine.

14. In a textile yarn processing machine, as set forth in claim **13**, in which said means for moving said second locking component comprises a pneumatically operated, piston-cylinder unit carried by said service carriage mechanism and connected to the medial portion of said flattened U-shaped member, and selectively-actuatable air circuit means for supplying compressed air upon actuation thereof to said piston-cylinder unit for moving said U-shaped member to the operative position of said second locking component.

15. In a textile yarn processing machine, as set forth in claim **14**, in which said roller is generally cylindrical shaped and said depression is shaped in the deepest portion thereof in the form of an arc of a circle generally corresponding to the diameter of said roller and the sides of said depression being in the form of tangentially inclined surfaces leading from said guide surfaces, and in which said medial portion of said flattened U-shaped member forming said second locking component further includes oppositely inclined guide surface extending outwardly from said first mentioned guide surfaces for contacting and guiding said roller onto said first mentioned guide surfaces and into said depression.

16. In a textile yarn processing machine, such as a twister, spinning frame or the like, having a plurality of spindle assemblies mounted in side-by-side relationship longitudinally of said machine and which individually require servicing in the event of yarn breakage, exhausting of a supply package of yarn, etc.; the combination therewith of a movable service carriage mechanism carrying means for selectively servicing desired individual spindle assemblies, means mounting said service carriage mechanism for movement longitudinally along the front of said machine and said spindle assemblies, and means for positioning, stopping and locking said service carriage mechanism in a predetermined desired location at the front of a selected spindle assem-

bly for servicing thereof, said positioning, stopping and locking means comprising:

a locking component mounted stationary on said machine at each of said spindle assemblies in a predetermined position and comprising an elongate member extending longitudinally of said machine and including a depression therein medially thereof and inclined guide surfaces extending longitudinally outwardly from said depression and forming generally an obtuse angle from said depression;

a cooperating locking component comprising a rotatably mounted roller movably carried on said service carriage mechanism for movement between an inoperative position away from contact with said stationary locking component at each of said spindle assemblies when positioning, stopping and locking of said service carriage mechanism is not desired and an operative position for contact with said stationary locking component and with said guide surfaces for being guided thereby into said depression for positioning, stopping and locking said service carriage mechanism; and

selectively operable means carried by said service carriage mechanism for resiliently moving said movable locking component into the operative position thereof for engagement between said movable locking component and said stationary locking component during the guiding and positioning of said roller in said depression.

17. In a textile yarn processing machine, as set forth in claim **16,** in which said movable locking component further includes a lever arm pivotally mounted at one end to said service carriage mechanism and rotatably carrying said roller on the other end thereof; and in which said means for moving said movable locking component comprises a pneumatically operated, piston-cylinder unit carried by said service carriage mechanism and connected to said lever, and selectively actuatable air circuit means for supplying compressed air upon actuation thereof to said piston-cylinder unit for moving said lever and said roller to the operative position of said movable locking component.

18. In a textile yarn processing machine, as set forth in claim **17,** in which said roller is generally cylindrical shaped and said depression is shaped in the deepest portion thereof in the form of an arc of a circle generally corresponding to the diameter of said roller and the sides of said depression are in the form of tangentially inclined surfaces leading from said guide surfaces; and in which said elongate member forming said stationary locking component further includes oppositely inclined guide surfaces extending outwardly from said first mentioned guide surfaces for contacting and guiding said roller onto said first mentioned guide surfaces and into said depression.

19. In a movable service carriage mechanism including means mounting said service carriage mechanism for movement longitudinally along the front of textile yarn processing machine or other machine for servicing the machine at desired predetermined longitudinal locations therealong; the improvement of means for positioning, stopping and locking said service carriage mechanism in selected, predetermined, desired locations along the front of the machine, and positioning, stopping and locking means comprising:

a first locking component comprising a rotatably mounted roller;

a second cooperating locking component comprising at least one elongate member extending longitudinally of the machine being serviced and including a depression therein medially thereof for receiving said roller and cooperating therewith for stopping and locking said service carriage mechanism and inclined guide surfaces extending longitudinally outwardly from said depression and forming generally an obtuse angle from said depression for contacting and guiding said roller into said depression for positioning said service carriage mechanism;

one of said first and second locking components being mounted stationary on the machine being serviced at each of the desired predetermined servicing locations and the other of said first and second locking components being movably mounted on said service carriage mechanism for movement between an inoperative position away from contact with said stationary locking component when positioning, stopping and locking of said service carriage mechanism is not desired and an operative position for contact with said stationary locking component when positioning, stopping and locking of said service carriage mechanism is desired; and

selectively operable means carried by said service carriage mechanism for resiliently moving said movable locking component into the operative position thereof.

20. In a movable service carriage mechanism, as set forth in claim **19,** in which said roller is generally cylindrical shaped and said depression is shaped in the deepest portion thereof in the form of an arc of a circle generally corresponding to the diameter of said roller and the sides of said depression are in the form of tangentially inclined surfaces leading from said guide surfaces; and in which said elongate member forming said stationary first locking component further includes oppositely inclined guide surfaces extending outwardly from said first mentioned guide surfaces for contacting and guiding said roller onto said first mentioned guide surfaces and into said depression.

21. In a movable service carriage mechanism, as set forth in claim **19,** in which said means for resiliently moving said movable locking component comprises at least one pneumatically-operated piston-cylinder unit carried by said service carriage mechanism and attached to said movable locking component and selectively actuatable, air circuit means for supplying compressed air to said piston-cylinder unit for actuation thereof for moving said movable locking component into engagement with said stationary locking component and resiliently maintaining such contact during movement of said roller along said inclined guide surfaces and into said depression.

22. In a movable service carriage mechanism, as set forth in claim **19,** further including indicator means associated with the machine being serviced for indicating a need for service individually for each of the predetermined servicing positions, and sensing means carried by said service carriage mechanism and connected with said means for resiliently moving said movable locking components and being responsive to the indication for the need for service by said indicator means for actuating said moving means to cause operation of said means for positioning, stopping and locking said service carriage mechanism.

23. In a movable service carriage mechanism, as set forth in claim 22, further including reversing drive means connected to said service carriage mechanism for driving said service carriage mechanism back and forth along the front of said machine, and in hich said sensing means is connected with said carriage drive means for stopping operation thereof in response to the indication which the need of service by said indicator means.

* * * * *