Nov. 4, 1947. L. P. GILLENTINE 2,430,011

PLUG EJECTOR

Filed May 15, 1944

FIG. 1.

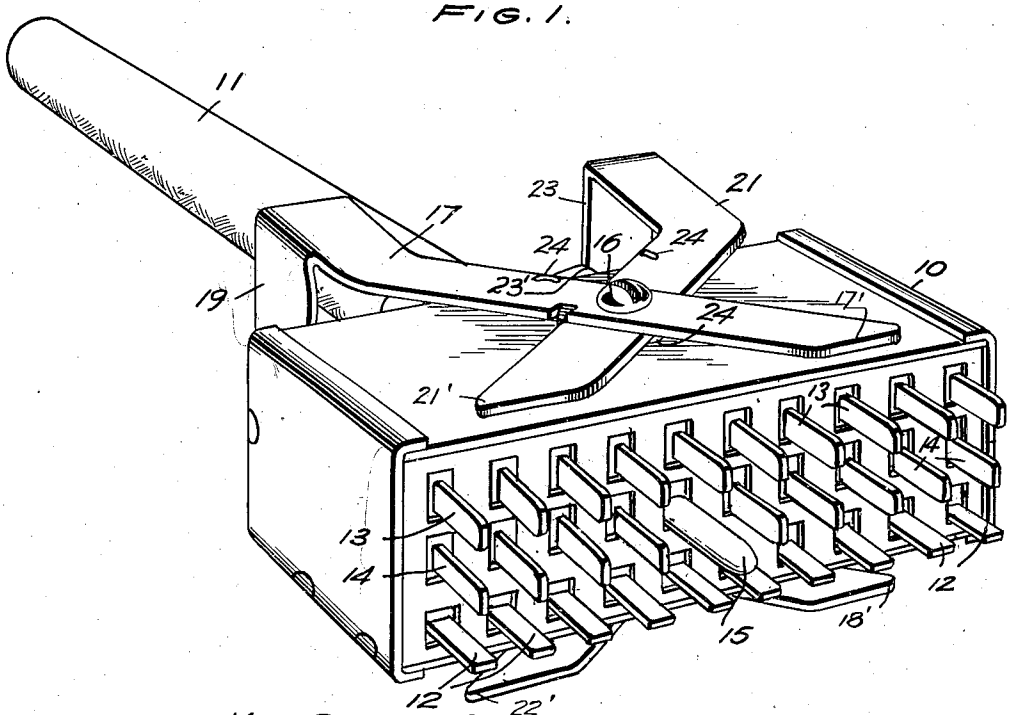

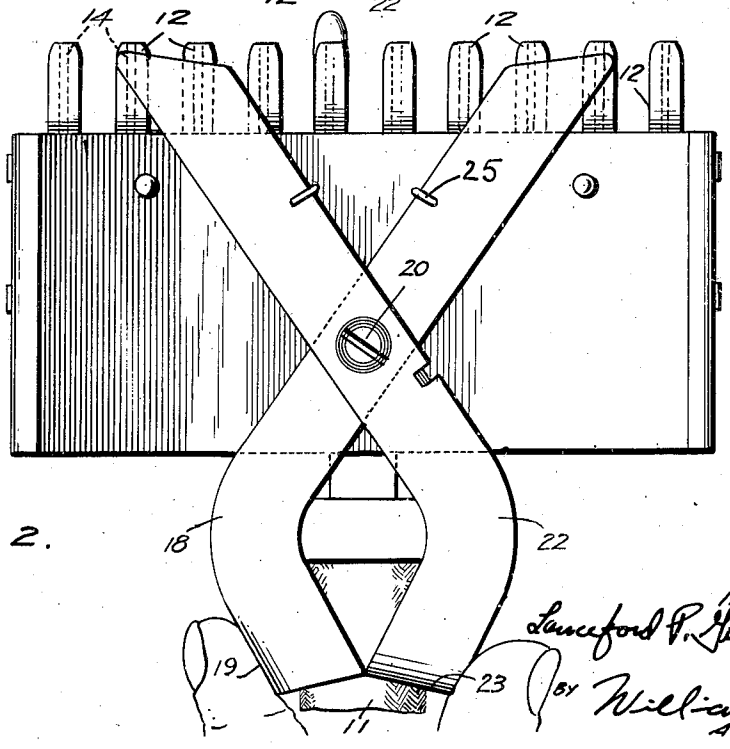

FIG. 2.

INVENTOR
Lunsford P. Gillentine
BY William D. Hall
ATTORNEY

Patented Nov. 4, 1947 2,430,011

UNITED STATES PATENT OFFICE

2,430,011

PLUG EJECTOR

Lunceford P. Gillentine, United States Army, Arlington, Va.

Application May 15, 1944, Serial No. 535,699

2 Claims. (Cl. 173—361)

(Granted under the act of March 3, 1883, as amended April 30, 1928; 370 O. G. 757)

1

The invention described herein may be manufactured and used by or for the Government for governmental purposes, without the payment to me of any royalty thereon.

This invention concerns certain electrical equipment, and specifically it is a means for facilitating the removal of a multiple-terminal plug from a cooperating terminal member.

In some electrical arts, particularly in communications, where a great many individual circuits must be made and broken frequently, it is customary, in order to save space, to enclose the wires, insofar as it may be feasible, in cables. At the end of such a cable will be arranged a multiple-terminal contact member or plug, such as is commonly known as a Jones plug. A cooperating female terminal member, which may correspond in size to the plug but is usually in the form of a large board, is adapted to receive the Jones plug, and thus to make the various circuits. The terminals of the Jones plug and the cooperating receiving member are so shaped and arranged that only proper circuits can be made, it being impossible to insert the plug improperly. Neither the plug itself, however, nor the arrangement of the terminal members thereof, forms any part of the present invention.

The difficulty which this invention is intended to overcome arises out of the fact that each male terminal member must fit snugly within its cooperating terminal member. A Jones plug of ordinary size contains thirty terminals. Such a plug can be inserted readily, but once in the board or other socket element, the friction load is such that removal is difficult, and sometimes results in loose, bent, or twisted terminals which require careful repair before the plug is again fit for use.

One object of the present invention is, therefore, to produce a simple mechanical means for readily separating a Jones plug or the like from its cooperating socket member.

Another object is to provide a means of the nature mentioned whereby, the separating force may always be applied in a line substantially parallel to the length of male terminal members.

A further object is to provide a mechanical means as above having a normal, inoperative position, and an extended position, and means for restoring the mechanical means to normal position after use.

Additional objects will be apparent from a reading of the following specifications and claims.

In the drawings:

Figure 1 is a perspective view of a Jones plug

2

of normal construction, with my invention applied thereto; the invention being in normal, inoperative position.

Figure 2 is a side elevation of the device of Figure 1, the parts of the invention being shown in their extended positions.

Referring to the drawings, 10 is a Jones plug of usual form, and 11 is a cable containing the wires of the various circuits handled by the plug. Terminal members are arranged on the plug. Terminals 12 are flattened posts, the flat sides of which are parallel to the length of the plug; terminals 13 are similar in shape, but their flat sides are arranged crosswise to the length of the plug; and terminals 14, running midway of the width of the plug, are shaped and arranged just as are terminals 13. Terminal 15 is a rounded post, and is larger and longer than 12, 13, and 14. As mentioned earlier, the forms and arrangement of these terminal members do not constitute parts of this invention; they merely assure that the plug will be inserted properly in the socket board.

Pivoted to one side of the plug, by screw 16, is a member comprising an arm 17, another arm 18 (adjacent the opposite side of the plug), and a bar 19 connecting the arms. Arm 18 is pivoted to the plug 10, at 20, just as arm 17 is pivoted. A second member, similar to that just described, includes arms 21 and 22, and connecting bar 23. Arms 21 and 22 also are pivoted to plug 10, at 16 and 20, respectively, and in such a manner that they intersect the first two mentioned arms 17 and 18. The arms 17, 18, 21, and 22, have their free ends, 17,' 18,' 21,' and 22,' respectively, somewhat rounded off. The reason for this will be explained.

A spring, 24, coiled around pivot screw 16 and connected to arm 17 and to arm 21, serves to maintain the arms normally in the condition shown in Fig. 1. Spring 25 affects arms 18 and 22 in a similar manner. Of course, other types of springs can be used.

The operation of the ejector will be readily apparent, and it will be only briefly described. Assuming the plug to be in place, it may be easily removed by grasping the bars 19 and 23 between a thumb and forefinger, and pressing the same toward each other. Obviously the free ends 17' and 21' of the arms 17 and 21, on the one side of the plug, and ends 18' and 22' of arms 18 and 22, on the other, will describe arcs that will carry them beyond the top of the plug case, and to or about the extremities of the terminal mem-

bers 12, 13, 14, and 15, that is, to the position illustrated in Fig. 2.

Almost as soon as the movement begins, the free ends of the arms will abut against the surface of the female terminal member, and then, as the movement continues, will force the plug member away from the same. The rounded formation of the ends of the arms aids in the action.

Depending upon the proportions of the various parts, it may or may not be necessary to close the operating members upon each other as shown in Figure 2 in order to loosen the plug in its socket. If it is, in fact, necessary, the lowermost portions of the connecting bars should be provided with recesses so as to avoid interference with cable 11 (see recess 23' in bar 23, Figure 1).

I claim:

1. A device of the nature described, including an elongated plug member adapted for sliding engagement with a socket member, an arm pivoted on one side of said plug and extending diagonally thereacross and having a free end normally disposed adjacent the socket member when said plug member is engaged therewith, a second arm pivoted on the opposite side of said plug and extending diagonally thereacross substantially parallel to said first mentioned arm and having a free end similarly disposed, and a bar connecting the other ends of said arms, another pair of arms similarly pivoted to said plug and extending diagonally across the same in a direction substantially opposite to that of the first mentioned two arms, having free ends likewise normally disposed adjacent the socket member, and another bar connecting their other ends, and spring means adapted to restore said arms to their normal conditions after movement therefrom.

2. A device of the nature described, including an elongated plug member adapted for sliding engagement with a socket member, an arm pivoted on one side of said plug and extending diagonally thereacross and having a free end normally disposed adjacent the socket member when said plug member is engaged therewith, a second arm pivoted on the opposite side of said plug and extending diagonally thereacross substantially parallel to said first mentioned arm and having a free end similarly disposed, and a bar connecting the other ends of said arms, another pair of arms similarly pivoted to said plug and extending diagonally across the same in a direction substantially opposite to that of the first mentioned two arms, having free ends likewise normally disposed adjacent the socket member, and another bar connecting their other ends, and a spring or the like interconnecting said arms adapted to restore the same to their normal conditions after movement therefrom.

LUNCEFORD P. GILLENTINE.

REFERENCES CITED

The following references are of record in the file of this patent:

UNITED STATES PATENTS

Number	Name	Date
2,051,425	Schlums	Aug. 18, 1936
2,134,345	Sheeran	Oct. 25, 1938
1,024,018	Parry	Apr. 23, 1912
433,726	Fliehr	Aug. 5, 1890
905,010	Simmons	Nov. 24, 1908
311,478	Flansburgh	Feb. 3, 1885
2,122,819	Lazich	July 5, 1938