Office de la Propriété Intellectuelle du Canada
Un organisme d'Industrie Canada

Canadian Intellectual Property Office
An agency of Industry Canada

CA 2828480 A1 2012/09/07

(21) 2 828 480

(12) DEMANDE DE BREVET CANADIEN
CANADIAN PATENT APPLICATION

(13) A1

(86) Date de dépôt PCT/PCT Filing Date: 2012/02/23
(87) Date publication PCT/PCT Publication Date: 2012/09/07
(85) Entrée phase nationale/National Entry: 2013/08/22
(86) N° demande PCT/PCT Application No.: US 2012/026398
(87) N° publication PCT/PCT Publication No.: 2012/118696
(30) Priorités/Priorities: 2011/02/28 (US13/036,351); 2011/04/28 (US13/096,049)

(51) Cl.Int./Int.Cl. *A61F 2/01* (2006.01), *A61F 2/82* (2013.01), *A61L 27/58* (2006.01)

(71) Demandeur/Applicant:
ADIENT MEDICAL, INC., US

(72) Inventeur/Inventor:
EGGERS, MITCHELL D., US

(74) Agent: MBM INTELLECTUAL PROPERTY LAW LLP

(54) Titre : FILTRE VASCULAIRE ABSORBABLE
(54) Title: ABSORBABLE VASCULAR FILTER

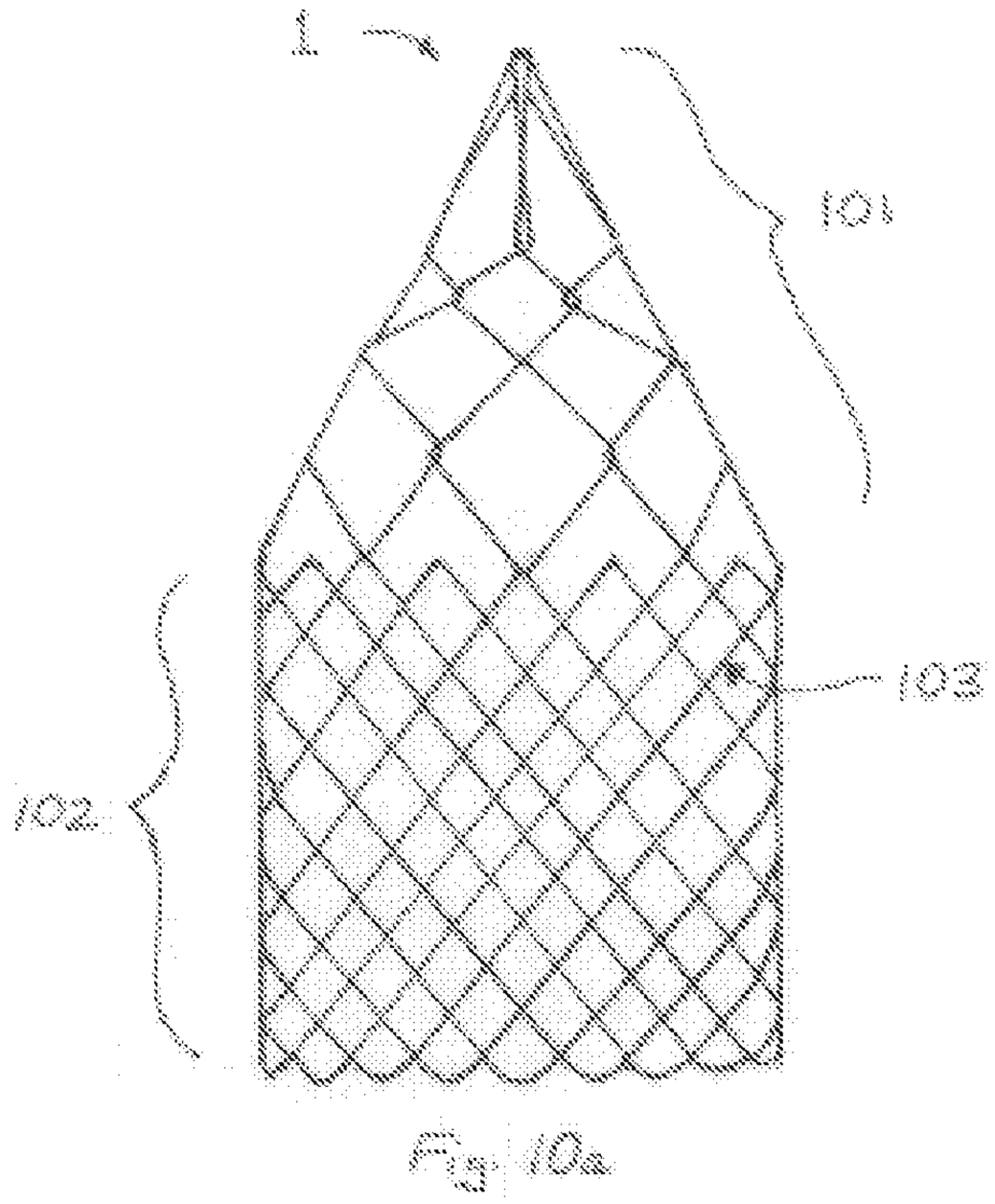


Fig. 10a

(57) Abrégé/Abstract:
An absorbable vascular filter is disclosed for deployment within a vessel for temporary filtering of body fluids. A preferred embodiment is the placement of such absorbable vascular filter within the inferior vena cava (IVC) to filter emboli for the prevention of pulmonary embolism for a limited duration in time. Once protection from PE is complete, the filter is biodegraded according to a planned schedule determined by the absorption properties of the filter components. Hence the temporary absorbable vascular filter obviates the long term complications of permanent IVC filters such as increased deep vein thrombosis, neighboring organ puncture from filter fracture and embolization while also circumventing the removal requirement of metal retrievable IVC filters.

(12) INTERNATIONAL APPLICATION PUBLISHED UNDER THE PATENT COOPERATION TREATY (PCT)

(19) World Intellectual Property Organization
International Bureau

(43) International Publication Date
7 September 2012 (07.09.2012)

WIPO | PCT

(10) International Publication Number
WO 2012/118696 A1

(51) International Patent Classification:
*A61F 2/01* (2006.01) *A61F 2/82* (2006.01)
*A61L 27/58* (2006.01) *A61F 2/84* (2006.01)

(21) International Application Number:
PCT/US2012/026398

(22) International Filing Date:
23 February 2012 (23.02.2012)

(25) Filing Language: English

(26) Publication Language: English

(30) Priority Data:
13/036,351 28 February 2011 (28.02.2011) US
13/096,049 28 April 2011 (28.04.2011) US

(71) Applicant *(for all designated States except US)*: **CROSS-ROAD LABS** [US/US]; 2315 Delta Bridge Dr., Pearland, TX 77584 (US).

(72) Inventor; and

(75) Inventor/Applicant *(for US only)*: **EGGERS, Mitchell, D.** [US/US]; 2315 Delta Bridge Dr., Pearland, TX 77584 (US).

(81) Designated States *(unless otherwise indicated, for every kind of national protection available)*: AE, AG, AL, AM, AO, AT, AU, AZ, BA, BB, BG, BH, BR, BW, BY, BZ, CA, CH, CL, CN, CO, CR, CU, CZ, DE, DK, DM, DO, DZ, EC, EE, EG, ES, FI, GB, GD, GE, GH, GM, GT, HN, HR, HU, ID, IL, IN, IS, JP, KE, KG, KM, KN, KP, KR, KZ, LA, LC, LK, LR, LS, LT, LU, LY, MA, MD, ME, MG, MK, MN, MW, MX, MY, MZ, NA, NG, NI, NO, NZ, OM, PE, PG, PH, PL, PT, QA, RO, RS, RU, RW, SC, SD, SE, SG, SK, SL, SM, ST, SV, SY, TH, TJ, TM, TN, TR, TT, TZ, UA, UG, US, UZ, VC, VN, ZA, ZM, ZW.

(84) Designated States *(unless otherwise indicated, for every kind of regional protection available)*: ARIPO (BW, GH, GM, KE, LR, LS, MW, MZ, NA, RW, SD, SL, SZ, TZ, UG, ZM, ZW), Eurasian (AM, AZ, BY, KG, KZ, MD, RU, TJ, TM), European (AL, AT, BE, BG, CH, CY, CZ, DE, DK, EE, ES, FI, FR, GB, GR, HR, HU, IE, IS, IT, LT, LU,

*[Continued on next page]*

(54) Title: ABSORBABLE VASCULAR FILTER

(57) Abstract: An absorbable vascular filter is disclosed for deployment within a vessel for temporary filtering of body fluids. A preferred embodiment is the placement of such absorbable vascular filter within the inferior vena cava (IVC) to filter emboli for the prevention of pulmonary embolism for a limited duration in time. Once protection from PE is complete, the filter is biodegraded according to a planned schedule determined by the absorption properties of the filter components. Hence the temporary absorbable vascular filter obviates the long term complications of permanent IVC filters such as increased deep vein thrombosis, neighboring organ puncture from filter fracture and embolization while also circumventing the removal requirement of metal retrievable IVC filters.

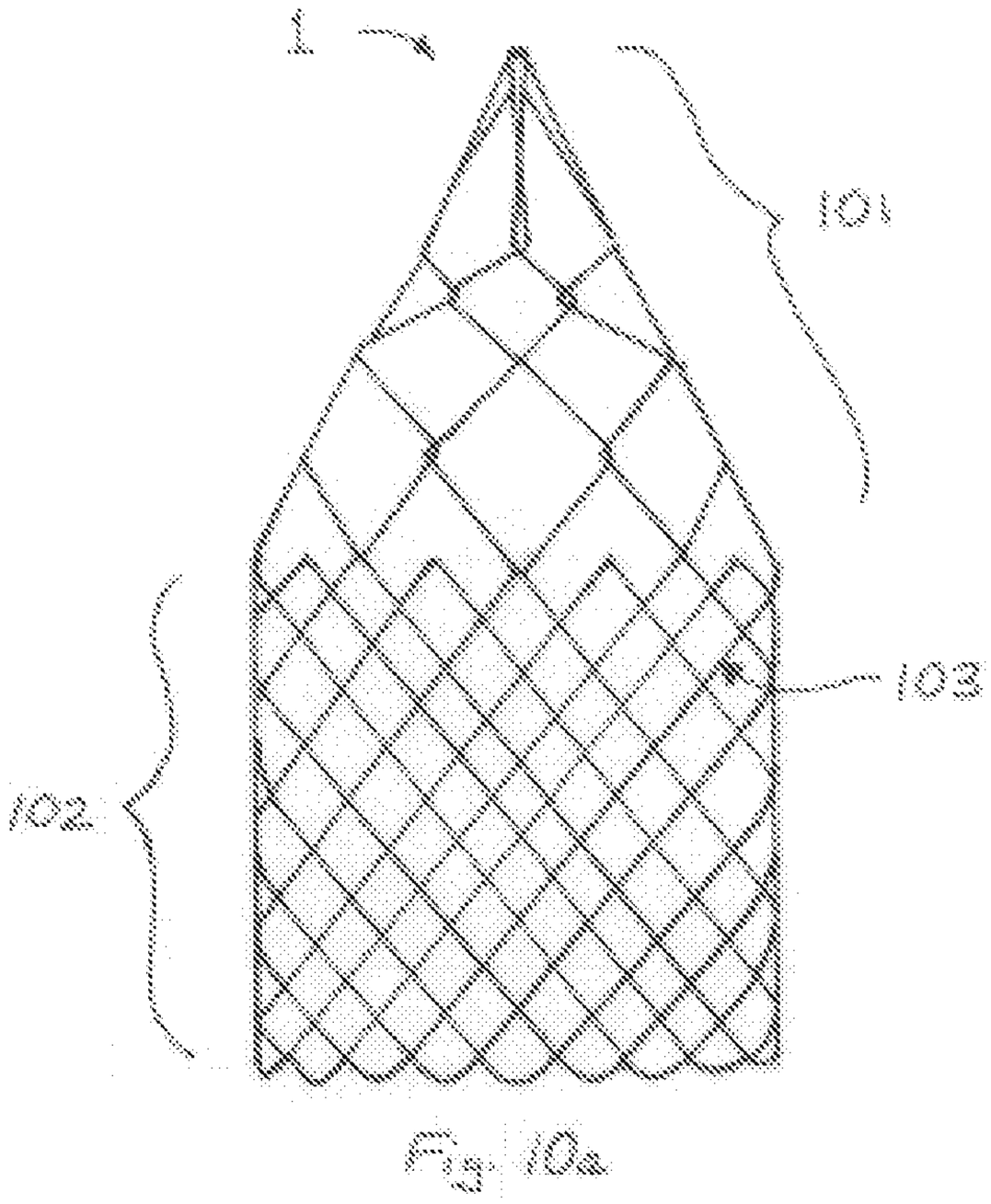


Fig. 1a

WO 2012/118696 A1

WO 2012/118696 A1

LV, MC, MK, MT, NL, NO, PL, PT, RO, RS, SE, SI, SK, SM, TR), OAPI (BF, BJ, CF, CG, CI, CM, GA, GN, GQ, GW, ML, MR, NE, SN, TD, TG).

**Published**:

— *with international search report (Art. 21(3))*

# ABSORBABLE VASCULAR FILTER

## CROSS-REFERENCE TO RELATED APPLICATIONS

**[0001]** This application claims the benefit of priority of U.S. Patent Application Serial No. 13/036,351 entitled "Absorbable Vascular Filter" to Mitchell Eggers, electronically filed on February 28, 2011, and U.S. Patent Application Serial No. 13/096,049 entitled "Vascular Filter Stent" to Mitchell Eggers, electronically filed April 28, 2011, both of which applications are expressly incorporated herein by reference in their entirety.

## FIELD OF THE INVENTION

**[0002]** The present invention relates generally to a vascular filter and more particularly to an absorbable vascular filter deployed within a vessel for temporary filtering of body fluids. A preferred embodiment is the placement of such absorbable vascular filter within the inferior vena cava (IVC) for the prevention of pulmonary embolisms for a specific duration of time determined by the absorption properties of the filter.

## BACKGROUND OF THE INVENTION

**[0003]** Between 100,000 to 300,000 Americans die annually from pulmonary embolism (PE) — more than breast cancer and AIDS combined — representing the 3rd leading cause of death in the US [1-5]. A similar incidence of PE is found in Europe with approximately 370,000 annual deaths [6]. Moreover, PE is the 3rd most common cause of death in trauma patients that survive the first 24 hours. An estimated 25% of all hospitalized patients have some form of deep vein thrombosis (DVT) which is often clinically unapparent unless PE develops [7]. On average, 33% of DVT will progress to symptomatic PE of which 10% will be fatal [6].

**[0004]** The US Surgeon General has recognized this alarming statistic and in 2008 issued a formal Call to Action to Prevent DVT and PE [1]. Unfortunately, DVT/PE disproportionately affects the elderly, in part due to prolonged periods of inactivity following medical treatment. The incidence is relatively low under the age of 50 (1/100,000), then accelerates exponentially reaching 1000/100,000 by the age of 85 [8]. Consequently the US Surgeon

General has proclaimed that the growth in number of DVT/PE cases with an aging US population may outpace the population growth in the absence of better prevention [1].

**[0005]** Risk factors for PE arising from DVT follow Virchow's Triad [9]: (i) endothelial injury, (ii) hypercoaguability, and (iii) hemodynamic changes (stasis or turbulence). Hence specific risk factors include hip and knee arthroplasty, abdominal, pelvic and extremity surgeries, pelvic and long bone fractures, prolonged immobility such as prolonged hospital stays and air travel, paralysis, advanced age, prior DVT, cancer, obesity, COPD, diabetes and CHF. Orthopedic surgeons are especially concerned since their patients carry a 40%-80% risk for DVT and PE following knee and hip surgeries in the absence of prophylactic treatment [10-12].

**[0006]** The American Academy of Orthopaedic Surgeons (AAOS) has issued guidelines for PE prophylaxis. Basically, patients at standard risk should be considered for chemoprophylactic agents such as aspirin, low molecular weight heparin (LMWH), synthetic pentassaccharides, or warfarin, in addition to intra-operative and/or immediate postoperative mechanical prophylaxis [13].

**[0007]** Aspirin has a 29% relative risk reduction in symptomatic DVT and a 58% relative risk reduction in fatal PE [14]. LMWH carries a 30% risk reduction in DVT and has been proven more effective than unfractionated heparin in high risk groups such as hip and knee arthroplasty [7]. Warfarin started within 24 to 48 hours of initiating heparin with a goal of achieving international normalized ratio (INR) results between 2 and 3 as secondary thromboprophylaxis for 3 months reduces the risk of recurrent venous thromboembolism (VTE) by 90% as compared with placebo [15,16]. Mechanical prophylaxis, consisting of pneumatic compression devices that repeatedly compress the legs with an air bladder, are also utilized in conjunction with anticoagulants to reduce the occurrence of PE.

**[0008]** The duration of prophylaxis depends on the source of potential DVT. Current recommendations for prophylaxis consist of a minimum 7-10 days for moderate to high risk surgeries and up to 28-35 days for many orthopedic surgeries. Specifically for orthopedic trauma, DVT prophylaxis is continued until patient mobilization (32%), inpatient discharge (19%), 3 weeks postop (16%), 6 weeks postop (27%), and in rare circumstances greater than

6 weeks (7%) [17]. Studies indicate that hypercoaguability persists for at least one month after injury in 80% of trauma patients [18]. Regarding total knee and hip arthroplasty and cancer surgeries, 35 day prophylactic treatment is recommended [12, 19]. Overall, prophylactic treatment for possible VTE is often warranted for up to 6 weeks following trauma or major surgery.

**[0009]** Contraindications for chemoprophylaxis include active bleeding, hemorrhagic diathesis, hemorrhagic stroke, neurologic surgery, excessive trauma, hemothorax, pelvic or lower extremity fractures with intracranial bleeding, anticoagulation interruption, and recent DVT/PE patients undergoing surgery.

**[0010]** For patients who are contraindicated for the above-mentioned anti-coagulation prophylaxis, or where anti-coagulation therapy has failed, the AAOS, American College of Physicians, and the British Committee of Standards in Haematology all recommend the use of inferior vena cava (IVC) filters [13, 20, 21]. These intravascular metal filters are deployed via catheter into the IVC to essentially catch emboli arising from DVT before reaching the lungs resulting in PE. Furthermore, the British Committee of Standards in Hematology recommends IVC filter placement in pregnant patients who have contraindications to anticoagulation and develop extensive VTE shortly before delivery (within 2 weeks).

**[0011]** The Eastern Association for Surgery of Trauma further recommends prophylactic IVC filters placed in trauma patients who are at increased risk of bleeding and prolonged immobilization [22]. Such prophylactic recommendation follows studies that demonstrate a low rate of PE in patients with severe polytrauma who underwent IVC placement [23-25]. In fact the fastest growing indication of overall IVC filter usage, from 49,000 in 1999 to 167,000 in 2007 with a projected 259,000 units for 2012, is the prophylactic market utilizing retrievable IVC filters [26, 27].

**[0012]** Example vascular filters primarily for IVC placement are disclosed in U.S. Pat. No. 4,425,908; U.S. Pat. No. 4,655,771, U.S. Pat. No. 4,817,600;U.S. Pat. No. 5,626,605;U.S. Pat. No. 6,146,404; U.S. Pat. No. 6,217,600 B1; U.S. Pat. No. 6,258,026 B1;U.S. Pat. No. 6,497,709 B1;U.S. Pat. No. 6,506,205 B2;U.S. Pat. No. 6,517,559 B1;U.S. Pat. No. 6,620,183 B2; U.S. Pat. App. Pub. No. 2003/0176888;U.S. Pat. App. Pub. No.

2004/0193209;U.S. Pat. App. Pub. No. 2005/0267512;U.S. Pat. App. Pub. No. 2005/0267515;U.S. Pat. App. Pub. No. 2006/0206138 A1; U.S. Pat. App. Pub. No. 2007/0112372 A1; U.S. Pat. App. Pub. No. 2008/0027481 A1; U.S. Pat. App. Pub. No. 2009/0192543 A1; U.S. Pat. App. Pub. No. 2009/0299403 A1;U.S. Pat. App. Pub. No. 2010/0016881 A1; U.S. Pat. App. Pub. No. 2010/0042135 A1; and U.S. Pat. App. Pub. No. 2010/0174310 A1.

**[0013]** IVC filter efficacy has been demonstrated in several class I and II evidence studies [22, 28-30]. Most of the earlier filters installed were expected to be permanent fixtures since endothelialization occurs within 7-10 days making most models impractical to remove without irreversible vascular damage leading to life threatening bleeding, dissection of the IVC, and thrombosis. Although these permanent filters have prevented PE, they have been shown to actually increase the risk of recurrent DVT over time.

**[0014]** Specifically, a Cochrane review [31] on the use of IVC filters for the prevention of PE cites a level I randomized prospective clinical trial by Decousus et al. [32] wherein the incidence of DVT with the IVC filter cohort increased almost 2-fold: (i) 21% incidence of recurrent DVT in the filter cohort vs. 12% in the non-filter LMWH cohort at 2 years ($p = 0.02$), and (ii) 36% incidence of recurrent DVT in the filter cohort vs. 15% in the non-filter group at 8 years ($p = 0.042$) [33]. However, the filters did reduce the occurrence of PE; the filter cohort experiencing only 1% PE vs. the non-filter cohort posting 5% PE in the first 12 days ($p = 0.03$). No statistically significant difference in mortality rate was seen in any time frame investigated. Apparently the initial benefit of reduced PE with permanent IVC filters is offset by an increase in DVT, without any difference in mortality.

**[0015]** In addition to increased incidence of DVT for prolonged IVC filter deployment, filter occlusion has been reported with a 6% to 30% occurrence, as well as filter migration (3% to 69%), venous insufficiency (5% to 59%), and post thrombotic syndrome (13% to 41%) [34-36]. Complications from insertion including hematoma, infection, pneumothorax, vocal cord paralysis, stroke, air embolism, misplacement, tilting arteriovenous fistula, and inadvertent carotid artery puncture have an occurrence rate of 4% - 11% [37].

**[0016]** Temporary or retrievable IVC filters have been marketed more recently intended to be removed once the risk of PE subsides, and hence circumvent many of the deleterious complications of permanent filters. The retrievable filters feature flexible hooks, collapsing components, and unrestrained legs to ease retrieval. Unfortunately these same features have led to unwanted filter migration, fatigue failure, IVC penetration, fragment migration to hepatic veins and pulmonary arteries, filter tilt, and metallic emboli [38-43]. Since 2005, 921 adverse filter events have been reported to the FDA including 328 device migrations, 146 device detachments (metallic emboli), 70 perforations of the IVC, and 56 filter fractures [44]. Some retrievable brands post alarming failure rates such as the Bard Recovery filter with 25% fracturing over 50 months which embolized end organs. 71% of the fractures embolized to the heart caused life threatening ventricular tachycardia, tamponade, and sudden death in some cases. An alternative retrievable model, Bard G2, resulted in 12% fractures over 24 months [45]. Such prevalence of device fractures is postulated to be directionally proportional to indwell time.

**[0017]** These failures and others prompted the FDA in August 2010 to issue a formal communication stating that "FDA recommends that implanting physicians and clinicians responsible for the ongoing care of patients with retrievable IVC filters consider removing the filter as soon as protection from PE is not longer needed" [44]. Even though these types of retrievable filters are intended to be removed in months time, several studies indicate that approximately 70%-81% of patients with retrievable IVC filters fail to return to the hospital for filter removal, thereby exposing hundreds of thousands of patients to the life-threatening adverse events of prolonged retrievable IVC filter placement [41, 44, 46-48]. These patients are either lost to follow-up, or refuse to have the filters removed in the absence of complications.

## BRIEF SUMMARY OF THE INVENTION

**[0018]** The present invention comprises systems and methods for filtering fluids. Certain embodiments comprise a novel absorbable vascular filter that temporarily prevents pulmonary embolism by capturing and restraining emboli within a body vessel. The absorbable vascular filter, according to certain aspects of the invention, possesses various advantages over all conventional vascular filters, including permanent, temporary, and

optional IVC filters. Most importantly, the absorbable vascular filter disclosed herein is slowly biodegraded within the vessel according to a planned schedule engineered by the choice of absorbable filter materials which prevents the requirement of filter removal. Moreover, the absorbable vascular filter elements are manufactured from non-metallic synthetic polymers which do not adversely impact end organs upon carefully planned degradation as exhibited by conventional metal IVC filters that migrate and often become fractionated. Also due to the relative short indwell time (months) of the absorbable vascular filter, the paradoxical increase in DVT seen with conventional long-term IVC filters is likely circumvented.

## BRIEF DESCRIPTION OF THE DRAWINGS

**[0019]** Fig. 1a is a cut-away isometric view of one embodiment of the absorbable vascular filter that includes phased sequential biodegradation of the absorbable capture elements.

**[0020]** Fig. 1b features the capture elements of Fig. 1a in detail.

**[0021]** Fig. 1c features the capture elements of Fig. 1b at a later point in time wherein the proximal portion of the capture elements has been bioabsorbed/biodegraded.

**[0022]** Fig. 1d features the capture elements of Fig 1c at a later point in time wherein the proximal and middle sections of the capture elements have been bioabsorbed/biodegraded, leaving only the distal section.

**[0023]** Fig. 1e represents complete bioabsorption/biodegradation of the capture elements of Fig. 1b at the most distant point in time.

**[0024]** Fig. 2a is a cross-sectional schematic of another embodiment of the absorbable vascular filter that also features phased sequential biodegradation of the absorbable capture elements.

**[0025]** Fig. 2b is an enlarged end-view of the absorbable capture elements of the absorbable filter depicted in Fig. 2a.

**[0026]** Fig. 2c depicts the capture elements of Fig. 2b at the time of filter installation in a vessel.

**[0027]** Fig. 2d depicts the capture elements of Fig. 2c at a later point in time wherein the inner capture ring element has been bioabsorbed/biodegraded.

**[0028]** Fig. 2e depicts the capture elements of Fig. 2d at a later point in time wherein a circumferential-mounted capture element has been bioabsorbed/biodegraded.

**[0029]** Fig. 2f depicts the capture elements of Fig. 2e at a later point in time wherein two circumferential-mounted capture elements have been bioabsorbed/biodegraded.

**[0030]** Fig. 2g depicts the capture elements of Fig. 2f at a later point in time wherein only one circumferential-mounted capture element remains following bioabsorption/biodegradation.

**[0031]** Fig. 2h depicts the capture elements of Fig 2b which have completely been bioabsorbed/biodegraded at the most distant point in time.

**[0032]** Fig. 3a is a cut-away isometric view of one embodiment of the vascular filter that includes a plurality of capture elements attached to the stent for filtering substances such as emboli.

**[0033]** Fig. 3b features the capture elements of Fig. 3a in detail.

**[0034]** Fig. 4a is an absorbable vascular filter constructed from polydioxanone suture sizes 3-0, 2-0, 0, and 1 in a webbed pattern that features sequential degradation based on the varying diameters and expiration dates of the capture elements.

**[0035]** Fig. 4b is an absorbable vascular filter constructed from polydioxanone suture similar in design to the webbed design in Fig. 4a except that only size 2-0 is utilized.

**[0036]** Fig. 4c is an absorbable vascular filter constructed from polydioxanone suture size 2-0 in a radial pattern typical of traditional IVC filters.

**[0037]** Fig. 4d is an absorbable vascular filter constructed from polydioxanone suture sizes 3-0, 2-0, 0, and 1 in a radial pattern that features sequential degradation based on the varying diameters of the capture elements.

**[0038]** Fig. 5 displays photographs of the absorbable filter presented in Fig. 4a during in-vitro testing at weeks 0, 7, 13-22 to reveal the sequential degradation of the filter loosing 1 to 2 capture elements per week beginning in week 13 and reaching final disintegration by week 22.

**[0039]** Fig. 6 is a graph of the mean load at break (kg/strand) of polydioxanone capture elements vs. time during the in-vitro testing.

**[0040]** Fig. 7 is a graph of polydioxanone capture element strength retention as a percentage of the original strength vs. time.

**[0041]** Fig. 8 is a graph of Young's modulus for polydioxanone capture elements vs. time during the in-vitro testing.

**[0042]** Fig. 9a is a cross-sectional schematic revealing a preferred method for installing the absorbable vascular filter using a catheter-based system with the filter in compressed mode.

**[0043]** Fig. 9b is a cross-sectional schematic detailing the deployment of the absorbable vascular filter using a catheter-based system with sliding outer sheath to deploy the filter in the fully expanded mode.

**[0044]** Fig. 9c is a cross-sectional schematic detailing the removal of the central stabilizing rod or piston used to stabilize the absorbable vascular filter while removing the outer sheath of the catheter-based installation system.

**[0045]** Fig. 9d illustrates the operation of the absorbable vascular filter in the presence of an embolus in the vessel.

**[0046]** Fig. 9e represents the vessel following complete biodegradation/bioabsorption of the absorbable vascular filter.

**[0047]** Fig. 10a represents an embodiment of the absorbable vascular filter constructed of a braided or woven stent integrated with a capture basket.

**[0048]** Fig. 10b is the associated top view of the absorbable vascular filter shown in Fig. 10a.

**[0049]** Fig. 11 is an expanded view of the braid or weave of absorbable elements comprising the stent section of the absorbable vascular filter.

**[0050]** Fig. 12 is an expanded view of the braid or weave of absorbable elements comprising both the stent section and capture basket for the integrated absorbable vascular filter.

**[0051]** Fig. 13a is a photograph of an integrated absorbable IVC filter woven with a single synthetic filament.

**[0052]** Fig. 13b is an end-view photograph of the integrated absorbable IVC filter presented in Fig. 13a.

## DETAILED DESCRIPTION OF THE INVENTION

**[0053]** Embodiments of the present invention will now be described in detail with reference to the drawings and pictures, which are provided as illustrative examples so as to enable those skilled in the art to practice the invention. Notably, the figures and examples below are not meant to limit the scope of the present invention to a single embodiment, but other embodiments are possible by way of interchange of some or all of the described or illustrated elements. Wherever convenient, the same reference numbers will be used throughout the drawings to refer to same or like parts. Where certain elements of these embodiments can be partially or fully implemented using known components, only those portions of such known components that are necessary for an understanding of the present invention will be

described, and detailed descriptions of other portions of such known components will be omitted so as not to obscure the invention. In the present specification, an embodiment showing a singular component should not be considered limiting; rather, the invention is intended to encompass other embodiments including a plurality of the same component, and vice-versa, unless explicitly stated otherwise herein. Moreover, applicants do not intend for any term in the specification or claims to be ascribed an uncommon or special meaning unless explicitly set forth as such. Further, the present invention encompasses present and future known equivalents to the components referred to herein by way of illustration.

**[0054]** Referring to the embodiment depicted in Figs. 1a-e, an absorbable vascular filter **1** consists of an outer, circumferential element **2** for supporting a plurality of absorbable filter capture elements (**30-32**, **40-41**). The capture elements are purposely designed to be biologically absorbed and/or degraded preferably in a sequential manner to avoid simultaneous detachment of the entire filter causing an unexpected embolus. Sequential degradation can be controlled by the choice of absorbable polymers that possess different absorption profiles, diameter, and/or expiration dates. Additionally, absorptive linkages may be incorporated to serves as detachment points during absorption. The sequential bioabsorption/biodegradation is illustrated in Figs. 1b-e where decomposition begins with the proximal capture elements **30,** progressing to the middle section capture elements **31,** and finally full bioabsorption/biodegradation as depicted in Fig. 1e.

**[0055]** Such engineered, sequential bioabsorption/biodegradation of the capture elements can be achieved with numerous synthetic materials. The goal is to select the absorbable filter materials to match a desired filter indwell time. Per the prior background section, a filter indwell time of 6 weeks would be suitable for an IVC filter to prevent PE following trauma or in conjunction with major surgeries. Synthetic materials which can be used to form the capture elements include:

**[0056]** Polydioxanone (PDO, PDS) – colorless, crystalline, biodegradable synthetic polymer of multiple repeating ether-ester units. In suture form, PDS II (Ethicon, Somerville, NJ) size 4/0 and smaller maintains 60%, 40%, and 35% of its tensile strength at 2, 4, and 6 weeks respectively. For PDS II size 3/0 and larger, it retains 80%, 70%, and 60% of its tensile strength at 2, 4, and 6 weeks respectively. In addition to providing wound support for 6

weeks, PDS II suture is fully absorbed in 183-238 days via hydrolysis making it a strong candidate for IVC filter applications. Basically absorption is minimal in the first 90 days and is essentially complete in 6 months. Finally, PDS has a low affinity for microorganisms and possesses minimal tissue reaction.

**[0057]** Polytrimethylene carbonate (Maxon) - similar to PDS in absorption profile yet with slightly higher breaking strength. Maxon (Covidien, Mansfield, MA) maintains 81%, 59%, and 30% of its tensile strength at 2, 4, and 6 weeks respectively, and is fully hydrolyzed in 180-210 days.

**[0058]** Polyglactin 910 (Vicryl) – braided multifilament coated with a copolymer of lactide and glycolide (polyglactin 370). In suture form, Vicryl (Ethicon) size 6/0 and larger maintains 75%, 50%, and 25% of its tensile strength at 2, 3, and 4 weeks respectively and is fully absorbed in 56-70 days.

**[0059]** Polyglycolic acid (Dexon) – similar to Polyglactin, made from polyglycolic acid and coated with polycaprolate. Dexon has similar tensile strength and absorption profile as Polyglactin.

**[0060]** Poliglecaprone 25 (Monocryl) – synthetic copolymer of glycolide and e-caprolactone. Monocryl (Ethicon) maintains 50%-70% and 20%-40% of its tensile strength at 1 and 2 weeks respectively and is fully absorbed in 91-119 days.

**[0061]** Polylacticoglycolic acid (PLGA) copolymer of monomers glycolic acid and lactic acid. Different forms and properties of PLGA can be fabricated by controlling the ratio of lactide to glycolide for polymerization. Like the other synthetic absorbable materials, PLGA degrades by hydrolysis with the absorption profile dependent on the monomer ratio; the higher content of glycolide, the faster degradation. However, the 50:50 copolymer exhibits the fastest degradation at 2 months. Since the polymer degrades in the body to produce lactic acid and glycolic acid, both being normal physiological substances, PLGA poses minimal systemic toxicity.

**[0062]** Poly L-lactic Acid (PLA) is also a polymer made from lactic acid yet with considerable longevity. In soft tissue approximation, PLA remains intact for 28 weeks, and is fully absorbed within 52 weeks.

**[0063]** As an example of engineering capture elements to sequentially degrade following the period of PE protection, the proximal capture elements **30,41** could be fabricated with PDS II size 4/0 (0.15mm dia.), while the middle capture elements **31,40** fabricated with size 2/0 (0.3mm dia.), and finally the distal capture elements **32** fabricated with size 2 (0.5mm) PDS II suture.

**[0064]** As an alternative to assembling a plurality of capture elements, the vascular filter can be fabricated with absorbable or non-absorbable composite mesh. Candidates for a mesh capture system include polypropylene such as C-QUR (Atrium Medical Corp. Hudson NH), polypropylene encapsulated by polydioxanone as in PROCEED (Ethicon, Somerville, NJ), polypropylene co-knitted with polyglycolic acid fibers as in Bard Sepramesh IP Composite (Davol, Inc., Warwick, RI), polyethylene terephathalate as in Parietiex Composite (Covidien, Mansfield, MA), and ePTFE used in DUALAMESH (W. Gore & Assoc. Inc., Flagstaff, AZ).

**[0065]** Regarding the circumferential element **2** in Figs. 1, 2, and 3 that serves to support the capture elements of the absorbable vascular filter and maintain filter positioning within the vessel upon expansion from a catheter, either an absorbable material such as described above or non-absorbable material can be utilized. A non-absorbable material would essentially serve as a permanent stent, lasting well beyond the life of the absorbable capture elements. This may be an important option in cases where the vessel needs assistance in maintaining patency. Both types of circumferential elements **2** may incorporate barbs **79** (refer Fig. 2) to maintain filter positioning upon deployment. Plausible non-absorbing materials for constructing the circumferential element include: Nitinol, Elgiloy, Phynox, 316 stainless steel, MP35N alloy, titanium alloy, platinum alloy, niobium alloys, cobalt alloys, and tantalum wire.

**[0066]** Figs. 2a-2h illustrate another embodiment of the absorbable vascular filter wherein the absorbable capture elements **60-64**are mounted to a simple circumferential element **2** held against the vessel wall **70** with optional barbs **79**. Here again the circumferential element **2**

can be fabricated with absorbable or non-absorbable materials of the like described above. An enlarged cross-sectional view of the capture element assembly **65** is shown in Fig. 2b. Notice that the sequential degradation of the capture elements is achieved by varying the diameter of the chosen absorbable material. For example, the inner capture element **60** could be PDS II 4/0 (0.15mm dia.) resulting in the fastest absorption as illustrated in Fig. 2d at time $t_1$, followed by capture element **61** degradation being PDS II 3/0 (0.20mm dia.) at time $t_2$ in Fig. 2e, followed by capture element **62** degradation being PDS II 2/0 (0.30mm dia.) at time $t_3$ in Fig. 2f, followed by capture element **63** degradation being PDS II 0 (0.35mm dia.) at time $t_4$ in Fig. 2g, and finally the degradation of the last capture element **64** constructed of PDS II 1 (0.40mm dia.) at time $t_5$ in Fig. 2h. Although these dimensions represent a specific example, any diameters within approximately 0.1mm to 0.7mm would suffice. Overall, a gradual progression of degradation is designed purposely following a prophylactic window of 6 weeks for trauma and major surgery applications.

**[0067]** Referring to the embodiment depicted in Figs. 3a and b, a vascular filter **1** consists of an outer, circumferential stent **2** for supporting a plurality of collapsible filter capture elements (**60-64**) and to maintain vessel patency. The capture elements are purposely designed to be collapsible for catheter-based installation and to avoid end organ damage. The supporting stent **2** is shown to be fabricated as an artificial vascular graft supported by undulating supporting structures **3**. This vascular filter, which can be comprised of absorbable or non-absorbable filter capture elements, possesses various advantages over all conventional vascular filters, including permanent, temporary, and optional IVC filters. Most importantly, the vascular filter is fabricated with a stent that serves as a circumferential mount for the capture elements in addition to providing vessel patency, and avoids endothelialization characteristic of metal filters with barbed struts. Hence the increased incidence of DVT observed with metal IVC filters due to inherent vessel damage from the metal struts is likely obviated.

**[0068]** The circumferential stent element **2** in Fig. 3a serves to support the capture elements of the vascular filter, in addition to maintaining vessel patency and maintaining stationary filter positioning within the vessel upon expansion. Numerous types of stents conventionally employed as thoracic endoprostheses can be utilized. Such stents would include Gore TAG, Medtronic Talent and Valiant Systems, and Cook Zenith TX2 System. In particular, the Gore

TAG is comprised of an artificial vascular graft fabricated with a fluoropolymer (expanded polytetrafluoroethylenee PTFE and fluorinated ethylene propylene or FEP) combined with a Nitinol supporting structure. Alternatively, the stent component of the vascular filter can be fabricated with only the supporting structure (without the artificial vascular graft) utilizing nickel-titanium alloy (Nitinol), cobalt-chromium-nickel alloy (Elgiloy), cobalt-chromium-nickel-molybdenum alloy (Phynox), 316 stainless steel, MP35N alloy, titanium alloy, platinum alloy, niobium alloys, cobalt alloys, and tantalum wire.

**[0069]** A specific embodiment of an absorbable vascular filter with sequential degradation was constructed, tested, and evaluated with assorted polydioxanone sutures (sizes 3-0, 2-0, 0, and 1) and is shown in Fig. 4a. The filter featured higher density webbing than shown in Fig. 2b to catch smaller emboli. Polydioxanone was the preferred candidate polymer based on tension retention and absorption properties proven in wound approximation applications. Tygon long flex lifetime tubing (Saint-Gobain Performance Plastics, Akron, OH) with 25.4mm id similar to the IVC was utilized for the vessel wall wherein polydioxanone was fabricated into the various filter patterns shown.

**[0070]** Fig. 4a sports webbed capture elements that are purposely designed for sequential or phased absorption to avoid simultaneous detachment of the entire filter during absorption. Here varying diameter strands of polydioxanone (size 3-0, 2-0, 0 and 1) were utilized to vary the time to complete absorption, in addition to varying the expiration dates. Since the absorbable polymers initially break at the stress points during absorption, the webbed filters were designed to disintegrate into 8 pieces at length D/2, and 8 pieces sized D/4, where D is the inside diameter of the vessel. The objective is piecemeal disintegration, phased or sequential, to minimize free floating exposure of the polymer filter capture elements in circulation. Fig. 4b is the same webbed design but with uniformly sized polydioxanone suture for comparison. Fig. 4c is a radial filter design similar to conventional metal IVC filters yet sports the varying diameter sutures for sequential absorption. Finally, Fig. 4d is a radial design constructed exclusively with polydioxanone size 2-0.

**[0071]** The primary endpoint for evaluating the absorbable polymers for vascular filter application was load at break as a function of time. In addition to the absorbable filters pictured in Fig. 4, several test cells were fabricated with the various absorbable polymer

candidates for weekly destructive tensile testing. Polymer characterization was performed utilizing the ADMET eXpert 7601 tensile testing machine with MTESTQuattro software (Norwood, MA) at weekly intervals to yield stress vs. strain graphs in addition to the primary endpoint of load at break, and several secondary endpoints: (i) maximum stress (tensile strength), (ii) maximum strain (% elongation at break), (iii) energy at break, and (iv) Young's modulus of elasticity. The ADMET machine was operated with a crosshead speed of 3cm/min and outfitted with a high resolution 100lb load cell and 2KN pneumatic grippers.

**[0072]** The candidate absorbable polymers (representing capture elements) sewn into the test cells were embedded in a closed circulation system engineered to mimic human cardio physiology. At weekly intervals, the system was shut down to extract sutures of each size and type to perform destructive tensile testing. As a control, identical absorbable sutures were submerged into a static buffer bath (StableTemp digital utility bath, Cole-Parmer, Vernon Hill, IL) held at 37°C and also tested on a weekly basis. The hypothesis being that the increased thermodynamics of the circulation system accelerates both absorption rate and tensile strength loss of the capture elements.

**[0073]** The closed circulation system was constructed with thin walled ¾" PVC with od 26.7 mm that fit snug inside the flexible 25.4 mm id Tygon tubing that simulated the IVC. The heart of the system was a Harvard Apparatus large animal pulsatile blood pump (Holliston, MA) that simulated the ventricular action of the heart. The Harvard Apparatus blood pump was operated near continuously for 22 weeks (913K L pumped) with minor preventative maintenance.

**[0074]** The heart rate was adjusted to 60 bpm, stroke volume between 60 and 70 ml, systolic/diastolic duration ratio 35%/65%, and systolic blood pressure varied from 120 mmHg (simulated conditions for an arterial filter to prevent cerebral and systemic embolism) to 5mmHg (simulated conditions for an IVC filter to prevent PE).

**[0075]** Real time measurements were available from the upstream and downstream sensor manifolds. The sensors upstream from the absorbable filters under test included digital temperature, flow rate (L/min), total flow (L), and pressure (mmHg). Downstream instrumentation included real time measurement of % oxygen, total dissolved solids (TDS in

ppt), and pH. TDS monitoring was included to evaluate the absorption by-products less than 20 microns in size, while the downstream 80 micron in-line filter would catch fragments of suture from the filters and test cells.

**[0076]** The 4 candidate absorbable vascular filters introduced in Fig. 4 were installed in series along the upstream tubing, whereas 5 test cells containing absorbable suture for weekly destructive testing were installed in series along the downstream section of the in-vitro cardio test system. A 288W heating tape with thermostat was utilized to maintain 37°C within the closed circulation system. Finally, the circulating fluid was pH 7.4 phosphate buffer (Invitrogen, Carlsbad, CA) with a similar electrolyte profile as human blood. Buffer was replaced weekly in an effort to maintain stable pH.

**[0077]** Absorption and tensile properties of the selected polymers were determined as a function of time until compete strength degradation in both the circulation system and control bath. The phosphate buffer in the circulation system was changed weekly as the pH decreased from 7.4 to an average 6.6 during each week. Buffer was changed in the control bath only monthly due to better pH stability in the static environment. Mean flow was 4.7 L/min while oxygen averaged 30% and TDS 8.8 ppt.

**[0078]** The phased or sequential absorption of the webbed absorbable filter design is illustrated in the collage of Figure 5. Notice the filter begins to disintegrate during the 13th week and continues in a phased manner, losing only 1 or 2 capture elements per week thereafter, until complete disintegration in 22 weeks. Initial fractures detected in the 13th week were located at the high stress points within the capture elements. Since the apex of a capture element mounted to the circumferential support experiences twice the stress in comparison to the base of the capture element, the initial break will be at the apex. The capture elements that formed loops extending from the vessel wall to the center of the filter were constructed of polydioxanone size 1 and 0 with expiration date Jan 2012, while the shorter capture elements that extended a quarter of the diameter were constructed of size 3-0 polydioxanone suture with an expiration date of Jan 2015. The expiration date was seen to play a greater role than suture diameter in the rate of absorption since the smaller diameter suture fractured in week 17, versus the larger diameter suture that fractured in week 13. The planned disintegration of 8 elements of length D/2 and 8 elements of length D/4 for the

webbed filter actually yielded smaller brittle fragments due to splintering and fragmenting. In fact the largest filter element captured from the webbed design by the downstream 80um filter revealed a maximum sized fragment of 5 mm x 0.3 mm.

**[0079]** Perhaps the paramount characteristic under consideration for use in an absorbable vascular filter is the strength retention profile of the absorbable polymers as depicted in Fig. 6 for polydioxanone in the in-vitro circulation system. As shown, polydioxanone initially exhibits moderate strength degradation, less than approximately 5% per week for the initial 5 to 6 weeks, followed by rapid decline approaching 20% per week thereafter. As a conservative summary for the initial 5 weeks in circulation, polydioxanone size 1 maintained about 10kg strength, size 0 maintained 6kg, size 2-0 maintained 4kg, and size 4-0 maintained 1.5kg. Similar results were obtained from a buffer bath control for the initial 5 weeks. However, statistical difference was achieved at week 5 for size 0 ($p < 0.014$), week 6 for sizes 2-0 and 1 ($p < 0.021$), and week 7 : $p < 0.011$).

**[0080]** The proposed filter designs employ multiple strands serving as capture elements, hence the emboli load is distributed across N strands. Therefore assuming equal distribution, the net emboli load that can be accommodated by the filter is a multiple, N, of the per strand load at break. Consequently, a polydioxanone size 2-0 filter with 8 capture elements secured at the circumferential support would accommodate a net emboli load of 32kg.

**[0081]** An alternative method for accessing strength retention for the polymers is to chart the percentage strength retention as a function of time as shown in Fig. 7. Here all polydioxanone sizes slowly lost strength for the first 5 weeks, then rapidly absorbed to negligible strength by the 10th week. Specifically, polydioxanone within the in-vitro circulation system retained average strength for sizes 2-0 and larger of 88% at 2 weeks, 85% at 4 weeks, and 68% at 6 weeks vs. Ethicon's in-vivo animal tissue approximation applications that yielded 80% at 2 weeks, 70% at 4 weeks and 60% at 6 weeks per Ethicon product literature.

**[0082]** Young's modulus of elasticity ranged from 1.0 – 2.3 GPa for polydioxanone as shown in Fig. 8 for the absorbable filter elements. Notice that Young's modulus initially decreased (polymer became more elastic) as it was subjected to the buffer, reached a minimum at 6 weeks, then increased to approximately twice the initial value. This increase in Young's

modulus for polydioxanone is indicative of the increased brittleness as it reached zero terminal strength, and was further observed during disintegration. This property may well be advantageous for the absorbable filter application. For example, as polydioxanone reached zero terminal strength and disintegrated, it splintered and fractured into smaller, brittle fragments thereby being potentially less harmful to downstream organs. Further studies are required to determine the exact size of the terminal fragments in-vivo and evaluate potential pulmonary micro-infarcts.

**[0083]** In conclusion from the in-vitro absorbable filter study, polydioxanone appears to be a strong candidate for absorbable vascular filters with sufficient strength retention to capture emboli for at least 6 weeks, then absorb rapidly over the next 16 weeks via hydrolysis into carbon dioxide and water. Specifically polydioxanone size 2-0 was shown to conservatively maintain 4 kg load at break per strand throughout 5 weeks in circulation. Hence a filter incorporating 8 capture elements would trap an embolus load of 32 kg; or equivalently, an embolism would have to deliver 1600 kgmm of energy to break through the filter which is highly unlikely given that the pressure in the IVC is a mere 5 mmHg (about 0.1psi). Moreover, the webbed filter geometry with varied diameter capture elements and expiration dates was shown to disintegrate in a sequential or phased manner, releasing 1 or 2 small brittle filter fragments (less than 5 mm x 0.3 mm each) weekly in circulation from weeks 14 through 22. Together with polydioxanone being FDA-approved and proven to be nonallergenic and nonpyrogenic, a catheter-deployed polydioxanone absorbable vascular filter would likely be an efficient and effective device for the prevention of pulmonary embolism.

**[0084]** A preferred installation of the absorbable vascular filter is via intravenous insertion with a catheter requiring only a local anesthetic as illustrated in Figs. 9a-e. Here the filter is collapsed and compressed within a delivery catheter comprised of an outer sheath **71** and internal applicator or stabilizer piston **73** on a central rod as illustrated in Fig. 9a. For IVC filter deployment, the delivery catheter is inserted into the patient's vasculature of convenient location, such as the femoral vein or internal jugular. Subsequently, the delivery catheter is fed through the vasculature typically over a guide wire until reaching the desired deployment location, often inferior to the renal veins. Next the compressed filter **50** is allowed to expand upon sliding the exterior sheath **71** in the proximal direction while simultaneously pushing

the stabilizer rod and piston **72** in the distal direction (refer Fig. 9b). Once the exterior sheath **71** is withdrawn away from the filter, the stabilizing piston **73** can also be retracted as depicted in Fig. 9c. Consequently as a thrombosis event releases an embolus **80**, the embolus is captured by the vascular filter and is prevented from traveling to the heart and lungs thereby preventing a potentially fatal PE (refer Fig. 9d). Following the desired prophylactic time window for filter utilization (approximately 6 weeks in many applications), the filter is biologically absorbed resulting in the absence of any foreign material in the vessel as depicted in Fig. 9e.

**[0085]** An alternative embodiment of the absorbable vascular filter **1** is portrayed in Fig. 10a with an integrated circumferential support **102** and capture basket **101**. Here the circumferential support **102** and capture basket **101** are braided or woven much like a radial expansible stent that can be compressed in a catheter as described above prior to deployment. Fig. 10b is a top view of the absorbable vascular filter that displays the weave or braid of the capture basket **101**. The weave is shown to maintain a patent center **104** to allow insertion of a guide wire during catheter deployment. The appeal of this particular embodiment is that the entire absorbable vascular filter (circumferential support and capture basket composed of the capture elements) can be fabricated from a single filament with a designed radial force to prevent filter migration as described below.

**[0086]** The integrated absorbable vascular filter shown in Figs. 10a and b yields a diametrically expandable and compressible tubular filter that exhibits a radial force with magnitude dependent on the materials chosen, angle phi ($\varphi$) of the crossing elements of the weave, and the amount of diameter over sizing employed. Specifically, the angle important to establishing radial force is depicted as $\varphi$ in Fig. 11. The larger the angle $\varphi$ as it approaches 180°, the greater the amount of radial force provided by the weave. Typically $\varphi$ is an obtuse angle, chosen between 90 and 180°.

**[0087]** For illustration, a simple cylindrical braided weave (L = 7, P = 4) is shown in Fig. 11 cut in the longitudinal direction and placed flat on a surface revealing the looping pins **110** and braiding filament **103**. Considering the weave as a series of sinusoid waveforms of period $P\tau$ (see bold section of weave in Fig. 11), where P is the number of looping pins traversed for one cycle of the sinusoid and $\tau$ is the pin-to-pin spacing, an algorithm can be derived to ensure that for a given set of parallel looping pins L that equidistantly span the circumference

of the intended diameter of the vascular filter, each pin will be looped once and the final loop ending at the origin.

**[0088]** The algorithm can be visualized by a table as shown in Table 1 to indicate the relationship between L, P and the angle φ for any desired number of circumferential loops (L).

**[0089]** Table 1. Relationship between braiding parameters.

| | L= 7 | | N | | | | | | | | | |
|---|---|---|---|---|---|---|---|---|---|---|---|---|
| phi | P | L/P | 1 | 2 | 3 | 4 | 5 | 6 | 7 | 8 | 9 | 10 |
| 41.0 | 2 | 3.50 | 3.50 | 7.00 | 10.50 | 14.00 | 17.50 | 21.00 | 24.50 | 28.00 | 31.50 | 35.00 |
| 73.6 | 4 | 1.75 | 1.75 | 3.50 | 5.25 | 7.00 | 8.75 | 10.50 | 12.25 | 14.00 | 15.75 | 17.50 |
| 96.6 | 6 | 1.17 | 1.17 | 2.33 | 3.50 | 4.67 | 5.83 | 7.00 | 8.17 | 9.33 | 10.50 | 11.67 |
| 112.5 | 8 | 0.88 | 0.88 | 1.75 | 2.63 | 3.50 | 4.38 | 5.25 | 6.13 | 7.00 | 7.88 | 8.75 |
| 123.7 | 10 | 0.70 | 0.70 | 1.40 | 2.10 | 2.80 | 3.50 | 4.20 | 4.90 | 5.60 | 6.30 | 7.00 |

L/P represents the fractional number of sinusoids traversed per circumference, and N represents the total number of turns around the circumference of the cylinder. Essentially the weave creates sinusoids that are out of phase by a fixed increment until the final loop is achieved for which the final sinusoid is desired to be in-phase with the initial sinusoid. The in-phase condition requires the product Nx(L/P) to be an integer. Moreover, to ensure all pins are looped, the first integer to be formed by the product Nx(L/P) must occur where N = P.

**[0090]** For example with L = 7 and P = 4, the first integer that appears in the row corresponding to P = 4 of Table 1 is where N = 4 so this combination of L, P, and N will provide a successful braid wherein all pins will be utilized (7 across the top, 7 across the bottom) and the final weave will terminate at the origin. It can be demonstrated that L must be an odd integer for a successful braid. It can further be shown that the angle φ can be expressed as $\varphi = 2\tan^{-1}(P\pi r/Ll)$ where r and l is the radius and length of the desired filter circumferential support **102**. The values for r and l used for calculating φ in Table 1 were 0.625 and 1.5 inches respectively. Also τ is easily computed from the relationship $L\tau = 2\pi r$ or $\tau = 2\pi r/L$.

**[0091]** Fig. 12 depicts another braid combination where L = 7 and P = 6. Notice that the first integer to appear in the row for P = 6 in Table 1 corresponds to N = 6 hence the braid will terminate successfully at the origin and all L pins looped once. Further Fig. 12 illustrates a method for forming the capture basket **101** as a simple continuous extension of the filament

beyond the circumferential support **102**. As shown at the alternating looping points across the top of the circumferential support, the conical capture basket **101** is weaved by sequentially interlocking loops from adjacent loops **105** and extending a loop to the apex **106**. The apical loops from each extension **106** can be bonded together revealing a conical capture basket as shown in Fig. 10b with a patent center apex **104**. Clearly other braided patterns can be employed to yield the pattern resolution sufficient to trap emboli of a desired size.

**[0092]** Although only a set of 7 looping pins were considered for simplicity in the above illustrations, a more likely number useful for an absorbable vascular filter for the IVC may well be 17 or 19 with $\varphi > 100°$. Specifically, an absorbable IVC filter with integrated circumferential support and capture basket was fabricated with a single 10ft synthetic filament (0.5mm diameter) as shown in Figs. 13a and b with L = 17, P = 16, $\varphi = 102°$, l = 1.5", r = 0.625", and $\tau = 0.23$". The self expandable IVC filter provides sufficient radial force to maintain placement in the IVC by the choice of the obtuse weave angle, 25% oversized diameter (to fit 1" IVC diameter), and wide diameter filament (0.5mm). Alternatively, the above described integrated absorbable vascular filter can be constructed with multiple bonded filaments, although a single continuous filament may be preferable.

**[0093]** Although the present invention has been described with reference to specific exemplary embodiments, it will be evident to one of ordinary skill in the art that various modifications and changes may be made to these embodiments without departing from the broader spirit and scope of the invention. Accordingly, the specification and drawings are to be regarded in an illustrative rather than a restrictive sense.

# REFERENCES

[1] Goldhaber SZ, Ortel TL. The Surgeon General's Call to Action to Prevent Deep Vein Thrombosis and Pulmonary Embolism, Office of the Surgeon General (US), National Heart, Lung, and Blood Institute (US).Rockville (MD). 2008

[2] Spencer FA, Emery C, Lessard D, Anderson F, Emani S, Aragam J et al. The Worcester Venous Thromboembolism study; a population-based study of the clinical epidemiology of venous thromboembolism. J Gen Intern Med 2006 Jul; 21 (7); 722-7.

[3] Bick RL. Hereditary and acquired thrombophilia: preface. SeminThrombHemost 1999; 25;251-3.

[4] Agudelo JF, Morgan SJ, Smith WR. Venous Thromboembolism in Orthopedic Trauma Patients, Orthopedics. 2005 Oct;28(10):1164-71.

[5] Tapson VF. Acute pulmonary embolism. N Engl J Med, 2008, 358, 10. 1037-52.

[6] Goldhaber SZ, Visani L, De Rosa M. Acute PE: clinical outcomes in the International Cooperative PE Registry (ICOPER). Lancet 1999. 353. 1386-9.

[7] Geerts WH, Jay RM, Code Kl, et al. A comparison of low-dose heparin with low-molecular weight heparin as prophylaxis against venous thromboembolism after major trauma. N Engl J Med. 1996; 335:701-7.

[8] Silverstein DM, Heit JA, Mohr DN, Petterson TM, O'Fallon WM, Meltron LJ, 3rd. Trends in the incidence of deep vein thrombosis and pulmonary embolism: a 25-year population-based study. Arch Intern Med 1998;158(6). 585-93.

[9] Von VR. Weitereuntersuchungenueber die verstopfung der lungenarterien und ihrefolge. Traube'sBeitraegeexp Path u Physiol, 1846; 2:21-31.

[10] Goldhaber SZ, Savage DD, Garrison RJ, et al. Risk factors for pulmonary embolism: The Framingham Study. Am J Med. 1983; 74: 1023-1028.

[11] Coon WW. Epidemiology of venous thromboembolism. Ann Surg. 1977; 186:149-164.

[12] Muntz JE, Michota FA. Prevention and management of venous thromboembolism in the surgical patient: options bye surgery type and individual patient risk factors, Am J of Surg, 2010; 199, S11-20.

[13] American Academy of Orthopaedic Surgeons Clinical Guideline on Prevention of Pulmonary Embolism in Patients Undergoing Total Hip or Knee Arthroplasty, American Academy of Orthopaedic Surgeons, May 2007.

[14] Pulmonary Embolism Prevention (PEP) Trial Collaborative Group: Prevention of pulmonary embolism and DVT with low dose aspirin: pulmonary embolism prevention (PEP) trial. Lancet. 2000; 355: 1295-1302

[15] Prins MH, Hutten BA, Koopman MM,et al. Longterm treatment of venous thromboembolic disease. Thromb Haemost 1999;82:892–8.

[16] Tran H, McRae S, Ginsberg J. Anticoagulant Treatment of Deep Vein Thrombosis and Pulmonary Embolism. Cardiology Clinics, 2008, 26, 235-50.

[17] Morgan SJ, Jeray KJ, Phieffer LS, Grisby JH, Bosse MJ, Kellam JF. Attitudes of orthopaedic trauma surgeons regarding current controversies in the management of pelvic and acetabular fractures. J Orthop Trauma.2001; 15:526-32.

[18] Meissner MH, Chandler WL, Elliot JS. Venous thromboembolism in trauma: a local manifestation of systemic hypercoagulability? J Trauma.2003; 4:224-31.

[19] Geerts WH, Bergqvist D, Pineo GF, et al. Prevention of venous thromboembolism: American College of Chest Physicians evidence-based clinical practice guidelines (8th edition). Chest. 2008;133:381S-453S.

[20] Huo MH, Spyropoulos AC. The eighth American college of chest physicians guidelines on venous thromboembolism prevention: implications for hospital prophylaxis strategies. J Thromb Thrombolysis. 2011, Feb;31(2): 196-208.

[21] Baglin TP, Brush J, Streiff M. Guidelines on the use of vena cava filters. British Committee for Standard in Haematology, British J of Haematology, 2006, 134, 590-5.

[22] Rogers FB, Cipolle MD, Velmahos G, et al. Practice management guidelines for the prevention of venous thromboembolism in trauma patients: the East practice management guidelines work group. J Trauma.2002; 53:142-164.

[23] Rosenthal D, Wellons ED, Lai KM, et al. Retrievable inferior venal cava filters: initial clinical results. Ann Vasc Surg 2006; 20:157-165.

[24] Gosin IS, Graham AM, Ciocca RG, et al. Efficacy of prophylactic vena cava filters in high risk trauma patients. Ann Vasc Surg 1997; 11:100-05.

[25] Spain DA, Richardson JD, Polk HC, et al. Routine prophylactic vena cava filter insertion in severely injured patients decreases the incidence of pulmonary embolism. J Am Coll Surg 1995; 180:641-47.

[26] Stein PD, Kayali F, Olson RE. Twenty-one year trends in the use of inferior vena cava filters. Arch Intern Med 2004; 164:1541-5.

[27] Kaufman JA, Kinney TB, Streiff MD, et al. Guidelines for the use of retrievable and convertible vena cava filters: report from the Society of Interventional Radiology multidisciplinary consensus conference. J Vasc Interv Radiol. 2006;17:449-459.

[28] Rodriquez JL, Lopez JM, Proctor MC, et al. Early placemen of prophylactic vena cava filters in injured patients at high risk for pulmonary embolism. J Trauma.1996; 40:797-804.

[29] Langan EM III, Miller RS, Caset WJ III, Carsten CG III, Graham RM, Taylor SM. Prophylactic inferior vena cava filters in trauma patients at high risk: follow-up examination and risk/benefit assessment. J Vasc Surg. 1999; 30:484-90.

[30] Greenfield LJ, Proctor MC, Rodriquez JL, Luchette FA, Cipolle MD, Cho J. Posttrauma thromboembolism prophylaxis. J Trauma. 1997,42:100-03.

[31] Young T, Tang H, Hughes R. Vena cava filters for the prevention of pulmonary embolism (Review). The Cochrane Library 2010, Issue 2.

[32] Decousus H, Leizorovics A, Parent F, et al. A clinical trial of vena caval filters in the prevention of pulmonary embolism in patients with proximal deep-vein thrombosis, N England J Med. 338,7:409-15.

[33] The PREPIC Study Group. Eight-year follow-up of patients with permanent vena cava filters in the prevention of pulmonary embolism: the PREPIC randomized study. Circulation 2005; 112:416-22.

[34] Ray CE, Kaufman JA. Complications of vena cava filters. Abdom Imaging 1996; 21:368-74.

[35] Ballew KA, Philbrick JT, Becker DM. Vena cava filter devices. Clin Chest Med 1995; 16:295-305.

[36] Streiff MB. Vena cava filters: a comprehensive review. Blood 2000; 95:3669-77.

[37] Pons M, Riglietti A, van den Berg JC. The role of vena cava filters in the management of venous thromboembolism. J Cardiovasc Surg 2010;51: 355-64.

[38] Usoh F, Hignorani A, Ascher E, et al. Long-term follow-up for superior vena cava filter placement. Ann Vasc Surg. 2009;23:350-4.

[39] Turba UC, Arsian B, Meuse M, et al. Gunther Tulip filter retrieval experience: predictors of successful retrieval. Cardiovasc Intervent Radiol. 2009

[40] Kinney TB. Update on inferior vena cava filters. J Vasc Interv Radiol. 2003;14:425-40.

[41] Grande WJ, Trerotola SO, Reilly PM, et al. Experience with the recovery filter as a retrievable inferior vena cava filter. J Vasc Interv Radiol 2005; 16:1189-93.

[42] Kirilcuk NN, Herget EJ, Dicker RA, et al. Are temporary inferior vena cava filters really temporary? Am J Surg 2005; 190:858-63.

[43] Kumar BC, Chakraverty Z, Zealley I. Failed retrieval of potentially retrievable IVC filters: a report of two cases. Cardiovasc Intervent Radiol 2006; 29: 126-7.

[44] Removing Retrievable Inferior Vena Cava Filters: Initial Communication. FDA Division of Small Manufacturers, International and Consumer Assistance, Aug 9, 2010.

[45] Nicholson W, Nicholson WJ, Tolerico P, et al. Prevalence of fracture and fragment embolization of Bard retrievable vena cava filters and clinical implications including cardiac perforation and tamponade. Arch Intern Med. 2010.

[46] Karmy-Jones R, Jurkovich GH, Velmahos GC, et al. Practice patterns and outcomes of retrievable vena cava filters in trauma patients: an AAST multicenter study. J Trauma.2007; 62: 17-25.

[47] Tschoe M, Kim HS, Brotman DJ, et al. Retrievable vena cava filters: a clinical review. J Hosp Med 2009, 4;7: 441-8.

[48] Dabbagh O, Nagam N, Chitima-Matsiga R, et al. Retrievable inferior vena cava filters are not getting retrieved Where is the gap? Thrombosis Rsch 2010. 126: 493-7.

WHAT IS CLAIMED IS:

1. An absorbable filter comprising:

a circumferential element in contact with a vessel; and

a plurality of absorbable capture elements affixed to the circumferential element for capturing substances flowing in a vessel for a limited duration in time.

2. The filter of claim 1, wherein more than one absorbable capture element has both ends attached to the circumferential element to form a loop, such that collectively the loops form a capture basket.

3. The filter of claim 1, wherein more than one absorbable capture element has both ends attached to the circumferential element to form a loop, and at least one capture element serves to integrate the loops to form a capture basket.

4. The filter of claim 1, wherein more than one absorbable capture element has both ends attached to the circumferential element to form a loop that does not extend to the radial center of the circumferential element, and at least one capture element serves to integrate the loops to form a capture basket.

5. The filter of claim 1, wherein a subset of the absorbable capture elements are chosen to sequentially degrade in time to avoid simultaneous bulk release of capture elements in the vessel over time.

6. The filter of claim 1, wherein the capture members are fabricated from absorbable materials selected from the group consisting of polydioxanone, polytrimethylene carbonate, polyglactin, polyglycolic acid, poly L lactic acid, poliglecaprone, polyglytone, and polylacticoglycolic acid.

7. The filter of claim 1, wherein the capture members are absorbable sutures.

8. The filter of claim 1, wherein the circumferential element is non-absorbable.

9. The filter of claim 1, wherein the circumferential element is absorbable.

10. The filter of claim 1, wherein the circumferential element is fabricated of materials selected from the group consisting of nickel-titanium alloy (Nitinol), cobalt-chromium-nickel alloy (Elgiloy), cobalt-chromium-nickel-molybdenum alloy (Phynox), stainless steel, MP35N alloy, titanium alloy, platinum alloy, niobium alloy, cobalt alloy, or tantalum wire.

11. The filter of claim 1, wherein the circumferential element is fabricated of absorbable materials selected from the group consisting of polydioxanone, polytrimethylene carbonate, polyglactin, polyglycolic acid, poly L lactic acid, poliglecaprone, polyglytone, or polylacticoglycolic acid.

12. The filter of claim 1, wherein the circumferential element comprises an anchor element or barb for attachment to a vessel.

13. The filter of claim 1, wherein the circumferential element contains a bioactive surface for anticoagulation.

14. The filter of claim 1, wherein the circumferential element is a stent.

15. An absorbable filter comprising:

a circumferential element in contact with a vessel; and

an absorbable capture basket affixed to the circumferential element for capturing substances flowing in a vessel for a limited duration in time.

16. The filter of claim 15, wherein the capture basket is fabricated from materials selected from the group consisting of polypropylene, polypropylene encapsulated in polydioxanone, polypropylene co-knitted with polyglycolic acid fibers, polyethylene terephathalate, ePTFE, polydioxanone, polytrimethylene carbonate, polyglactin, polyglycolic acid, poly L lactic acid, poliglecaprone, polyglytone, and polylacticoglycolic acid .

17. The filter of claim 15, wherein the capture basket is a biocompatible mesh.

18. The filter of claim 15, wherein the capture basket is fabricated from materials used in constructing a biocompatible mesh selected from the group consisting of polypropylene such as C-QUR (Atrium Medical Corp. Hudson NH), polypropylene encapsulated by polydioxanone as in PROCEED (Ethicon, Somerville, NJ), polypropylene co-knitted with polyglycolic acid fibers as in Bard Sepramesh IP Composite (Davol, Inc., Warwick, RI), polyethylene terephathalate as in Parietiex Composite (Covidien, Mansfield, MA), and ePTFE used in DUALAMESH (W. Gore & Assoc. Inc., Flagstaff, AZ).

19. The filter of claim 15, wherein the circumferential element is non-absorbable.

20. The filter of claim 15, wherein the circumferential element is fabricated of materials including, but not limited to, nickel-titanium alloy (Nitinol), cobalt-chromium-nickel alloy (Elgiloy), cobalt-chromium-nickel-molybdenum alloy (Phynox), stainless steel, MP35N alloy, titanium alloy, platinum alloy, niobium alloy, cobalt alloy, or tantalum wire.

21. The filter of claim 15, wherein the circumferential element is absorbable.

22. The filter of claim 15, wherein the circumferential element is fabricated of absorbable materials selected from the group consisting of polydioxanone, polytrimethylene carbonate, polyglactin, polyglycolic acid, poly L lactic acid, poliglecaprone, polyglytone, or polylacticoglycolic acid.

23. The filter of claim 15, wherein the circumferential element comprises an anchor element or barb for attachment to a vessel.

24. The filter of claim 15, wherein the circumferential element contains a bioactive surface for anticoagulation.

25. The filter of claim 15, wherein the circumferential element is a stent.

26. An absorbable filter comprising a braided circumferential element in contact with a vessel that is integrated with an absorbable capture basket for capturing substances flowing in a vessel for a limited duration in time.

27. The filter of claim 26 wherein the braided circumferential element and capture basket are constructed of a single, continuous absorbable filament.

28. The filter of claim 26 wherein the braided circumferential element and capture basket are constructed of a plurality of absorbable filaments.

29. The filter of claim 26, wherein the integrated circumferential element and capture basket are fabricated from absorbable materials selected from the group consisting of polydioxanone, polytrimethylene carbonate, polyglactin, polyglycolic acid, poly L lactic acid, poliglecaprone, polyglytone, and polylacticoglycolic acid.

30. The filter of claim 26, wherein the braided circumferential element is braided to offer diametrically expandable and compressible tubular characteristics to accommodate minimally invasive deployment via a catheter.

31. The filter of claim 26 wherein the radial force of the braided circumferential element exerted on the vessel lumen is selected based on the angle on intersection with the braided elements comprising the circumferential element, material composition and size, and/or the outer diameter of the circumferential element.

32. The filter of claim 26 wherein the capture basket is formed by sequentially interlocking loops from adjacent loops distal to the circumferential element and extending loops to the apex in a periodic manner to form a conical capture basket with filter resolution determined by the periodicity of the braid.

33. The filter of claim 26, wherein the circumferential element and/or capture basket contains a bioactive surface for anticoagulation.

34. A method for delivering a filter as claimed in 1, 15, and 26 with a delivery catheter wherein the delivery comprises:

inserting the filter, in compressed form, within a delivery catheter to a desired position within a vessel; and

deploying the filter in expanded form at the desired position within a vessel; and

subsequently removing delivery catheter from the vessel.

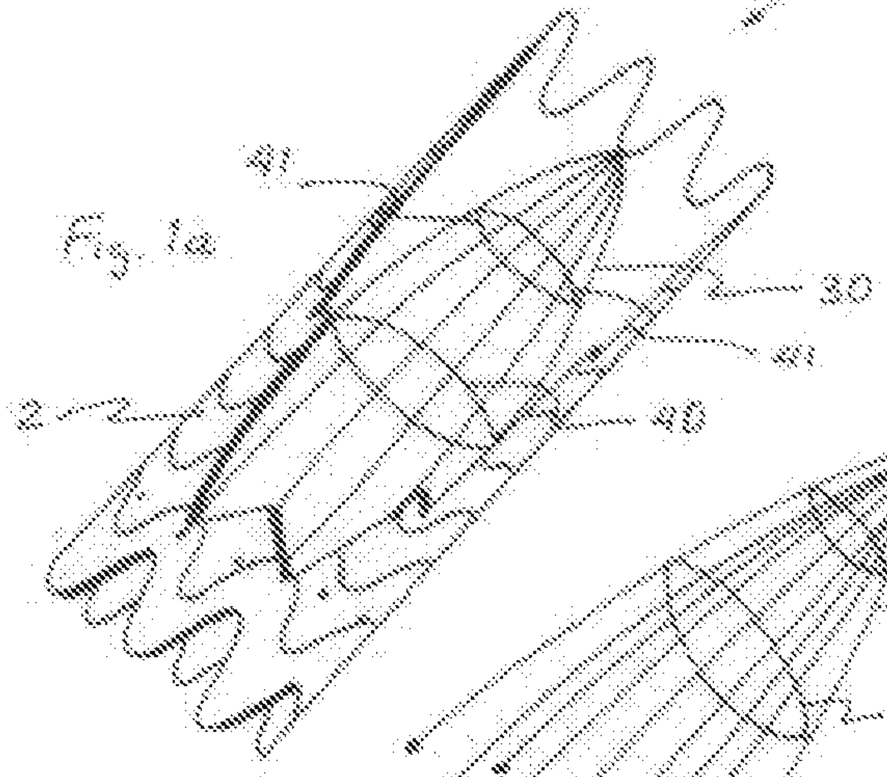


Fig. 1a

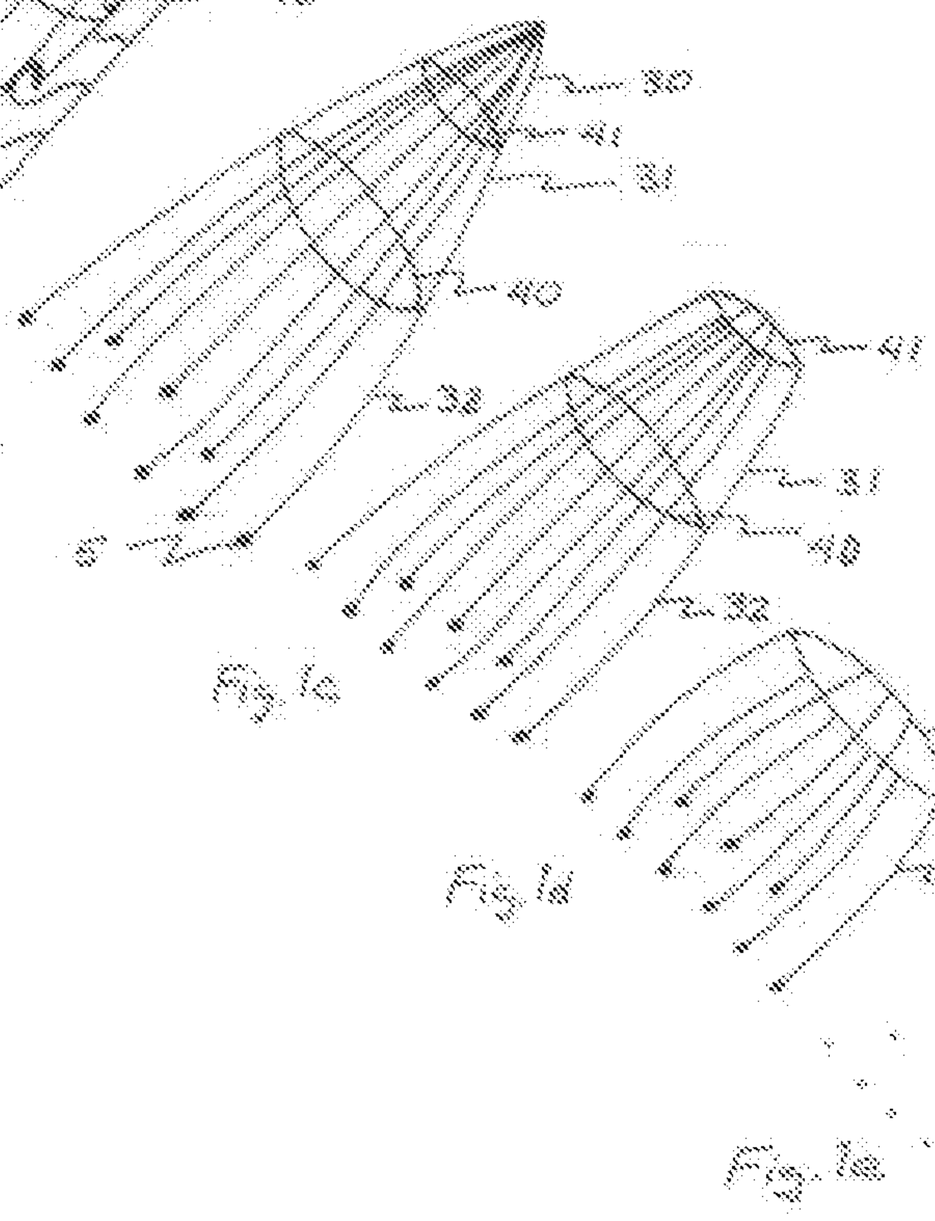


Fig. 1b




Fig. 1c

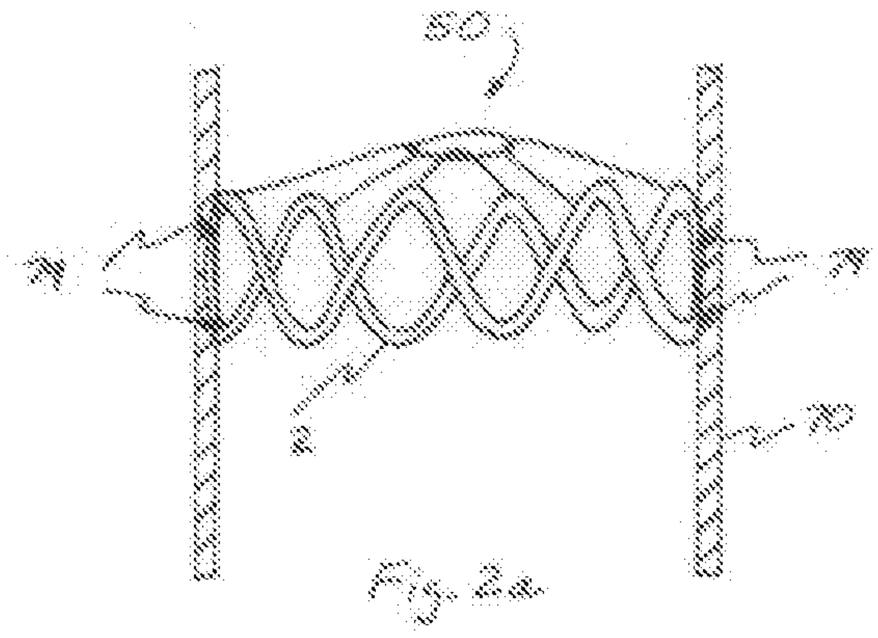

Fig. 2c

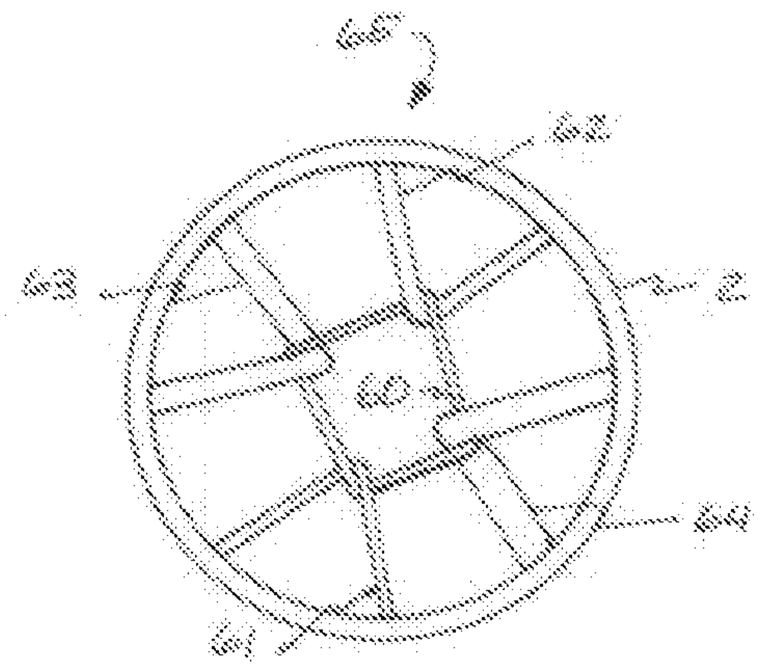

Fig. 2b



Fig. 2a Fig. 2d Fig. 2e Fig. 2f Fig. 2g Fig. 2h

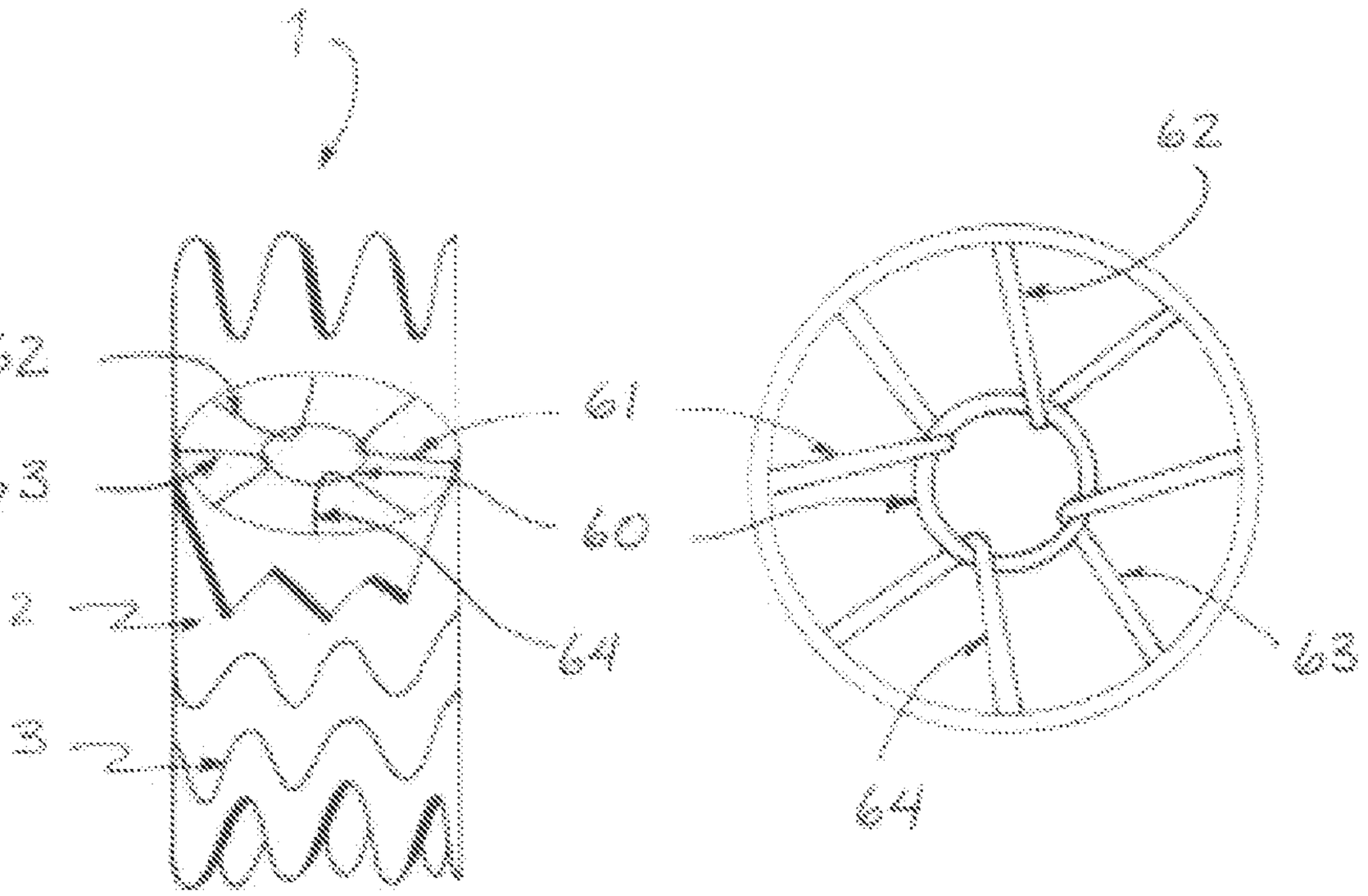


Fig. 3a Fig. 3b

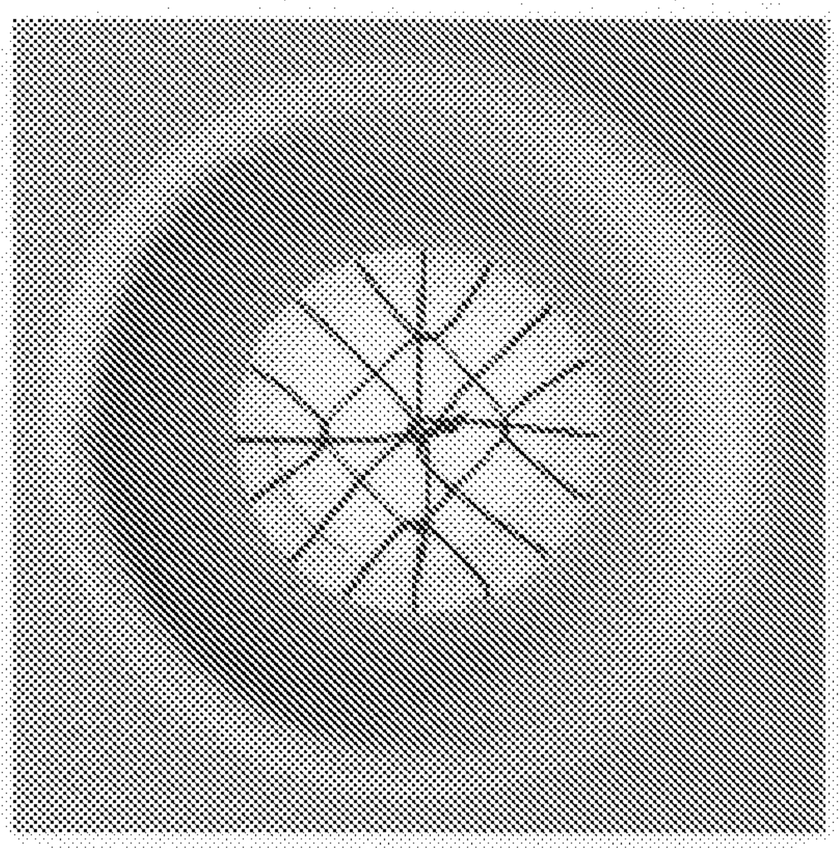

Fig. 4b

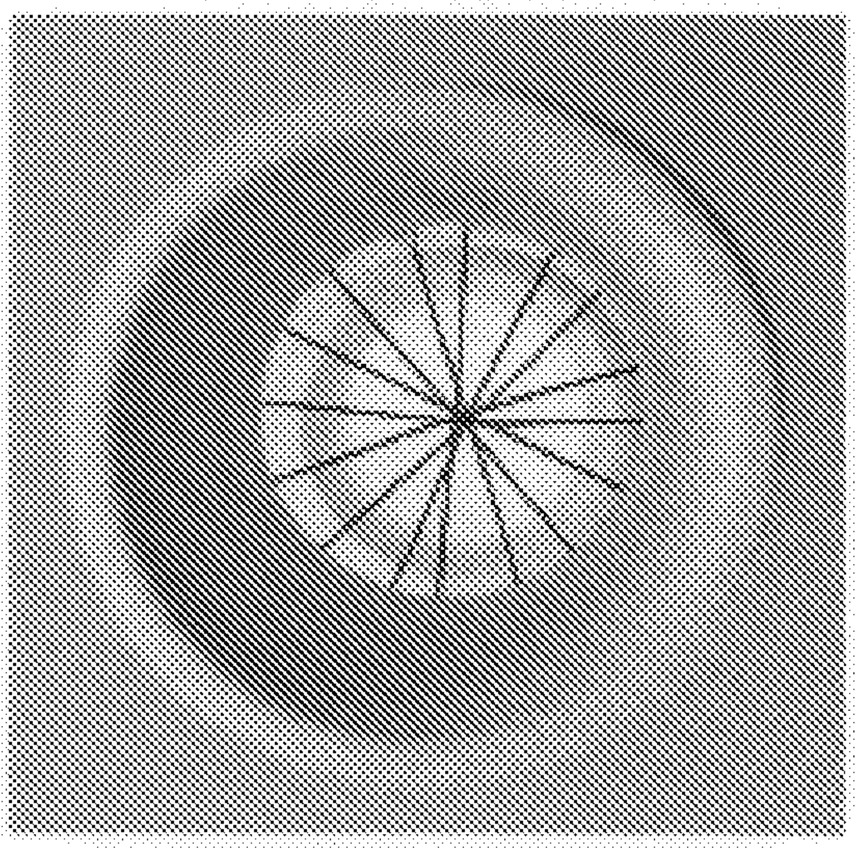

Fig. 4c

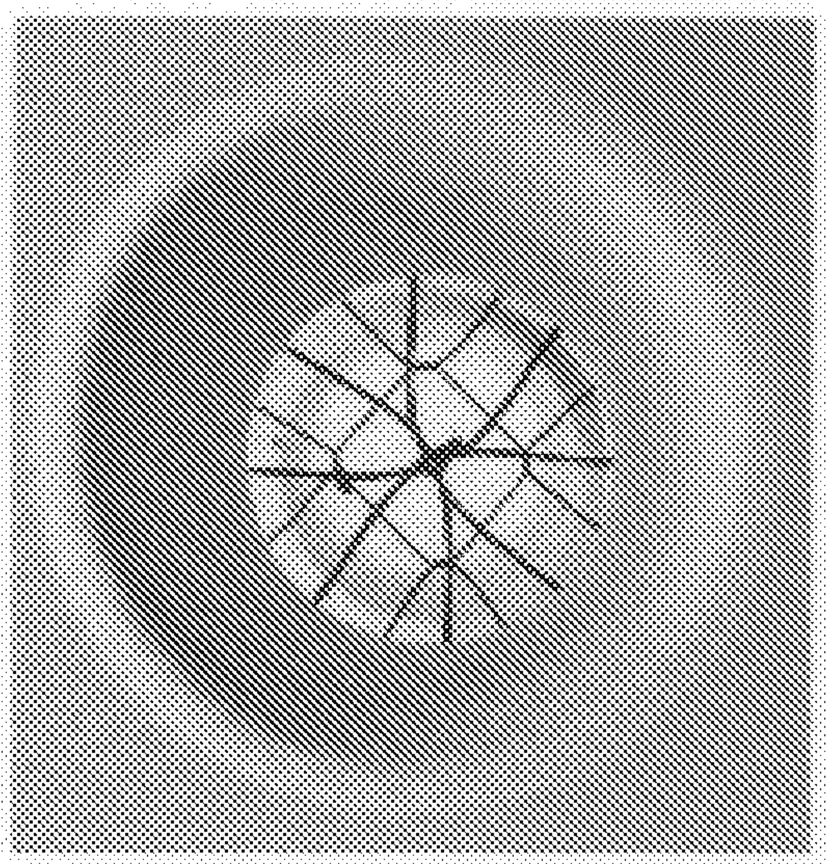

Fig. 4a

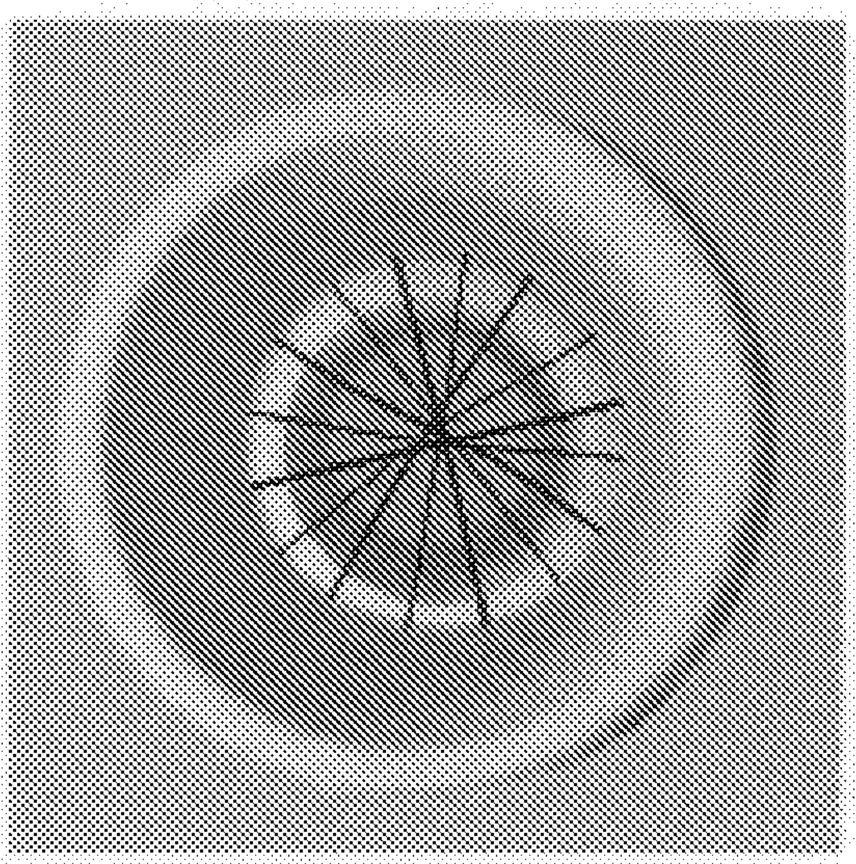

Fig. 4d

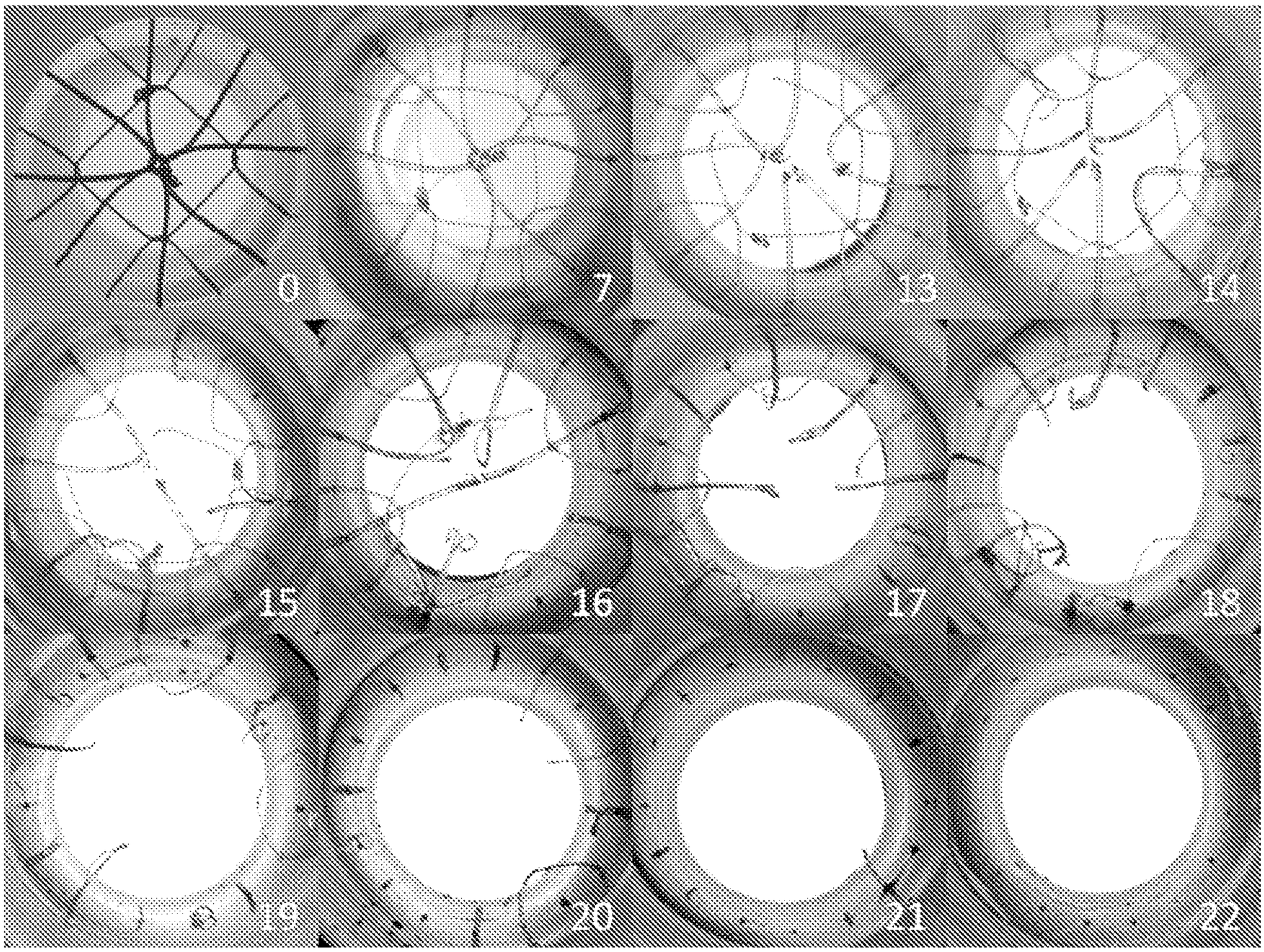


Fig. 5

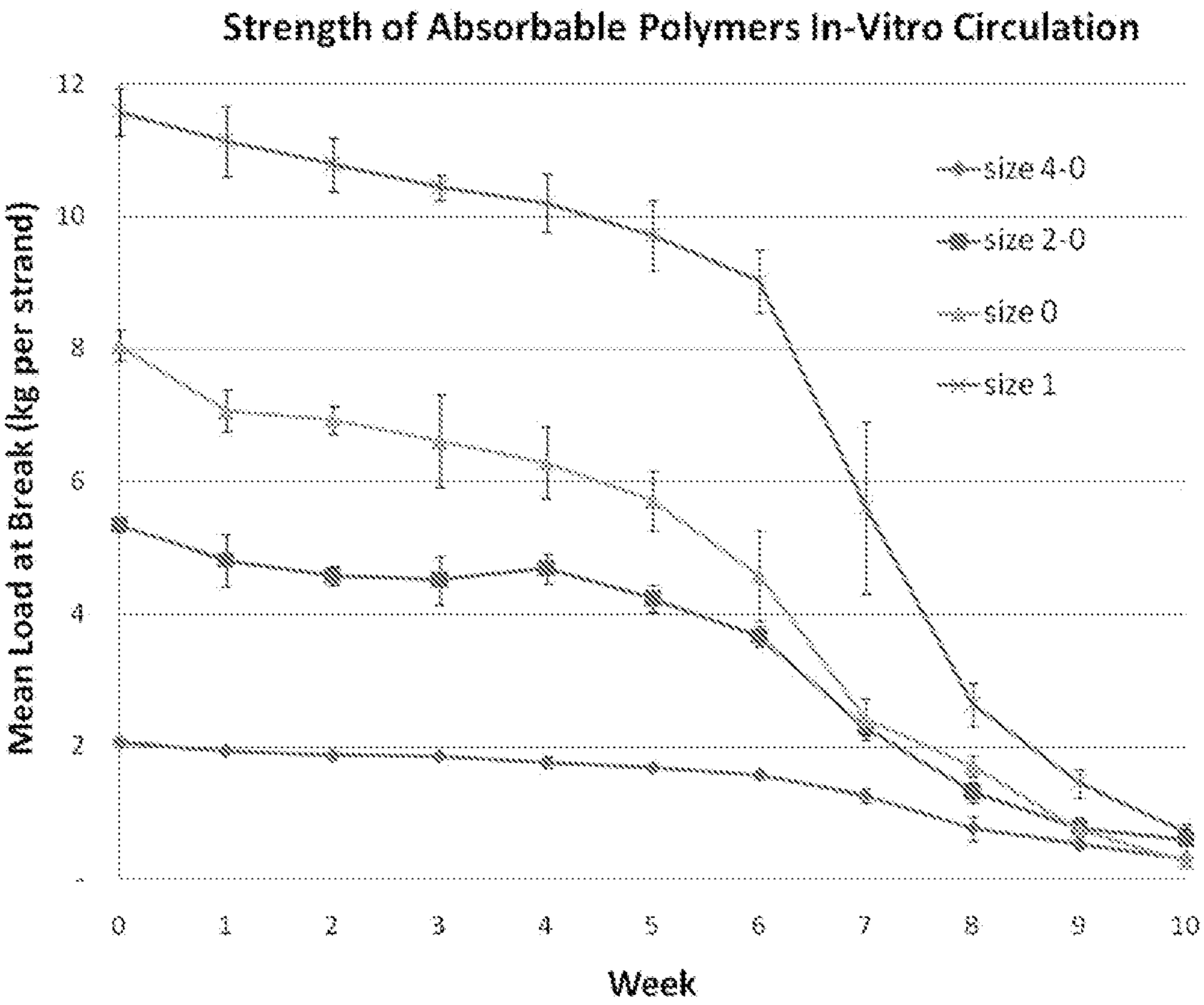
Strength of Absorbable Polymers In-Vitro Circulation
Mean Load at Break (kg per strand)
Week
size 4-0
size 2-0
size 0
size 1
0
1
2
3
4
5
6
7
8
9
10
12
10
8
6
4
2

Fig. 6

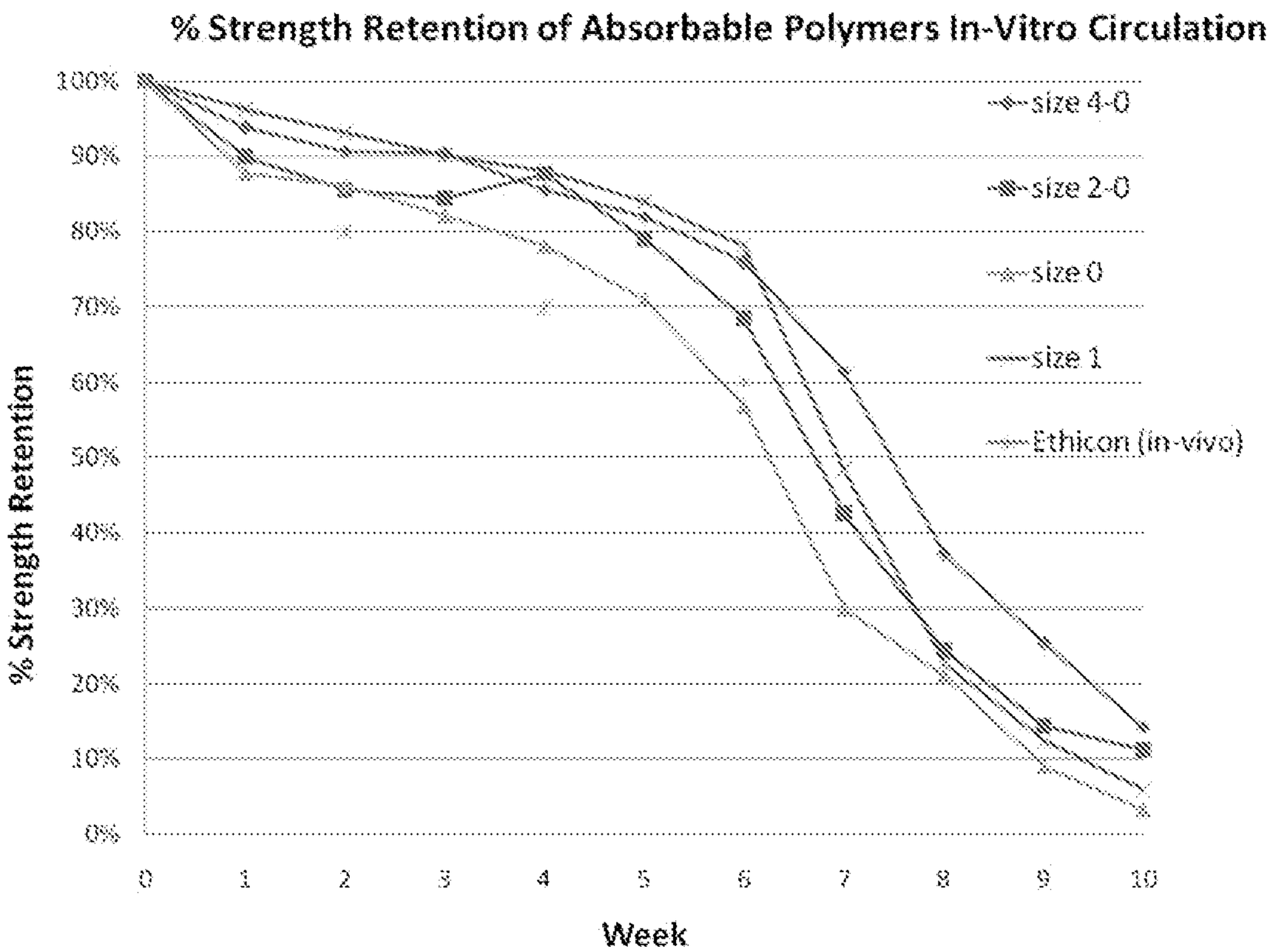
% Strength Retention of Absorbable Polymers In-Vitro Circulation
% Strength Retention
100%
90%
80%
70%
60%
50%
40%
30%
20%
10%
0%
0
1
2
3
4
5
6
7
8
9
10
Week
size 4-0
size 2-0
size 0
size 1
Ethicon (in-vivo)

Fig. 7

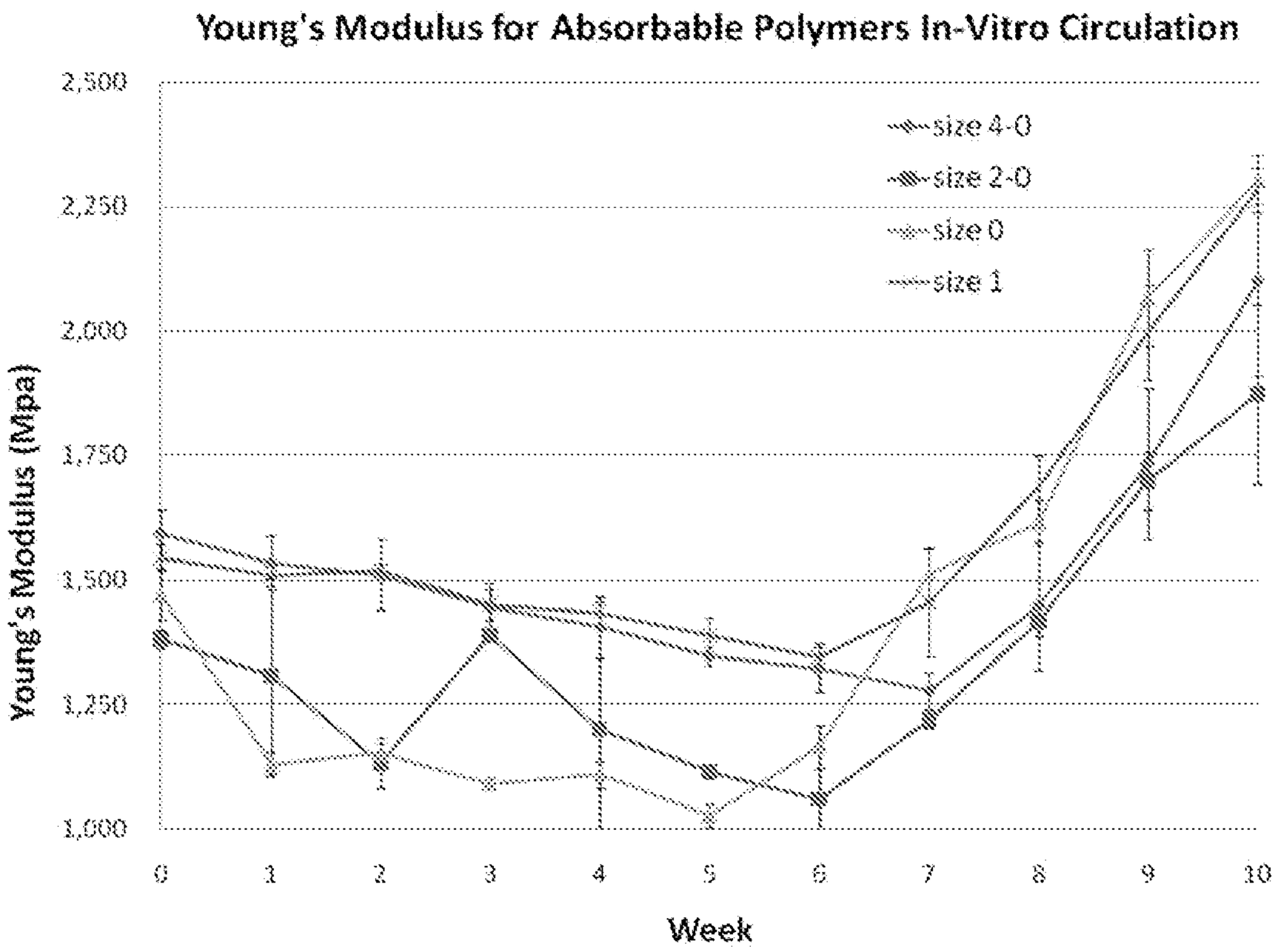
Young's Modulus for Absorbable Polymers In-Vitro Circulation
2,500
2,250
2,000
1,750
1,500
1,250
1,000
Young's Modulus (Mpa)
size 4-0
size 2-0
size 0
size 1
0
1
2
3
4
5
6
7
8
9
10
Week

Fig. 8

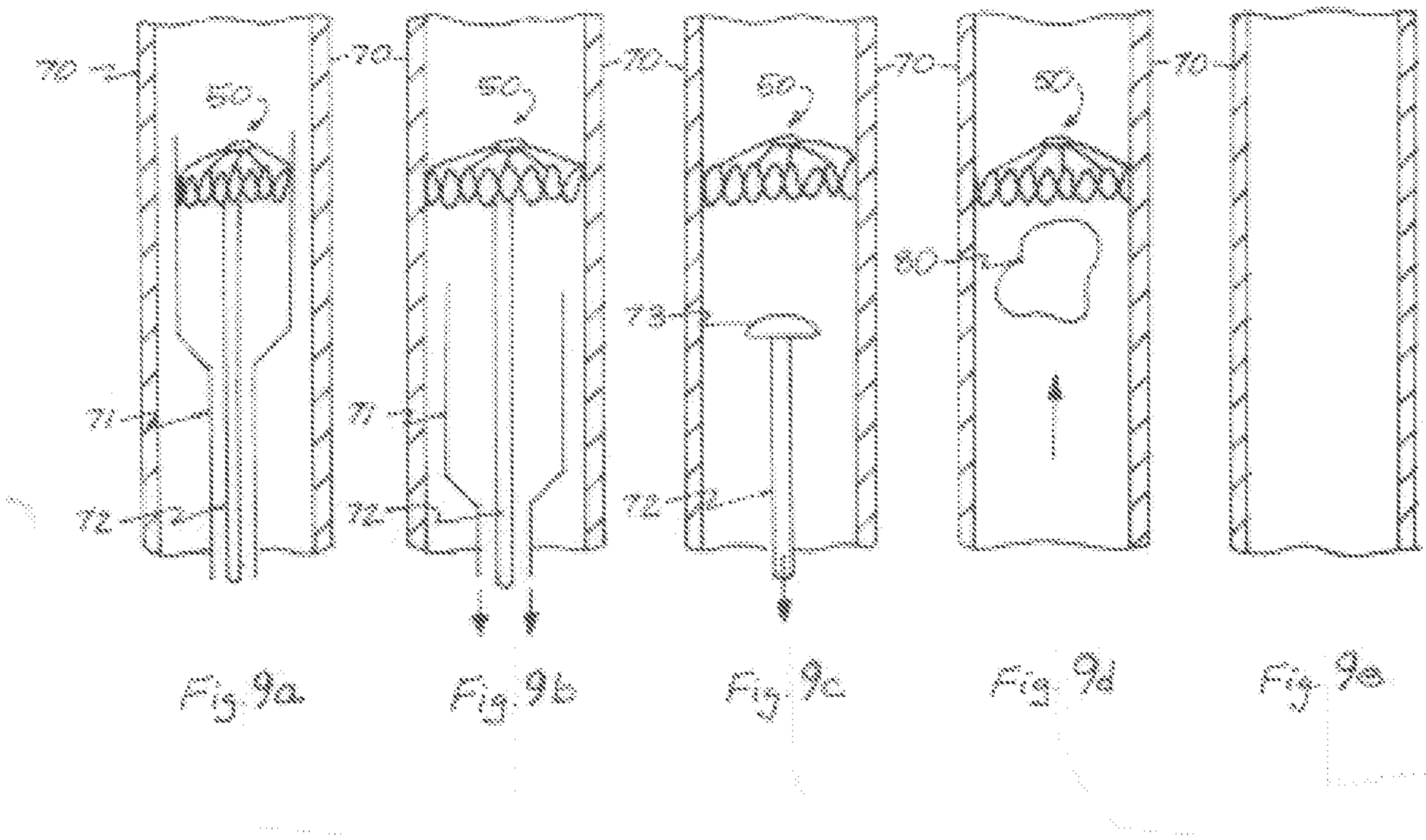

Fig. 9a Fig. 9b Fig. 9c Fig. 9d Fig. 9e

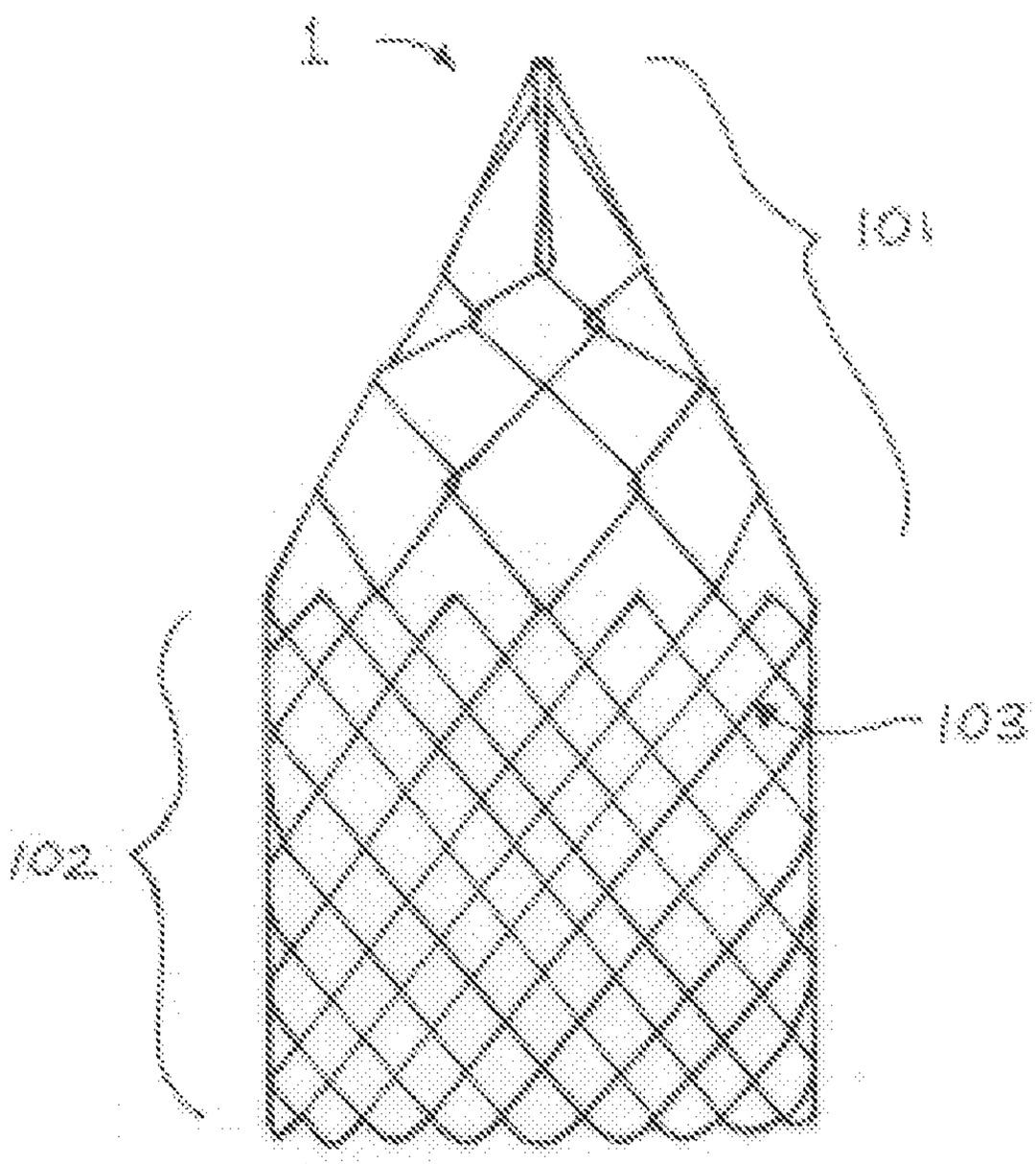


Fig. 10a

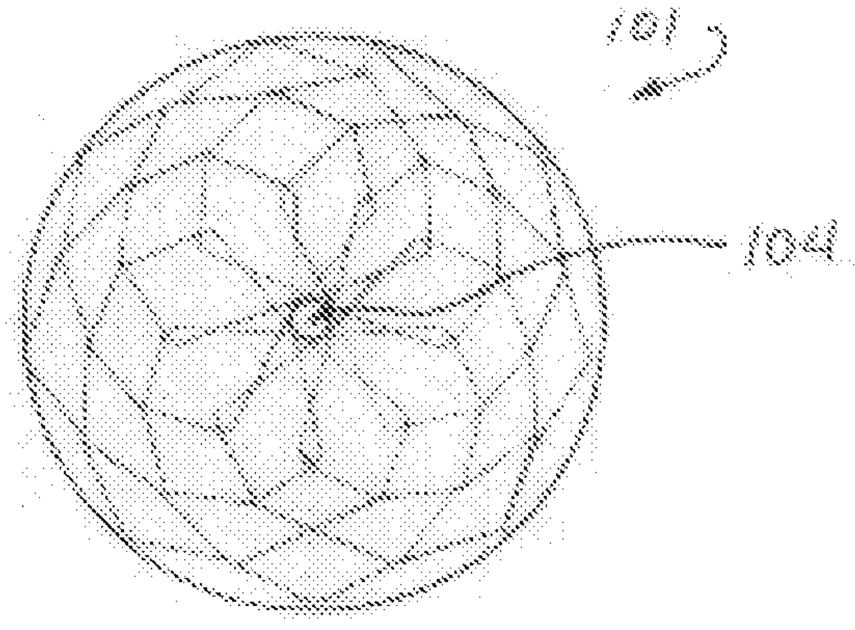


Fig. 10b

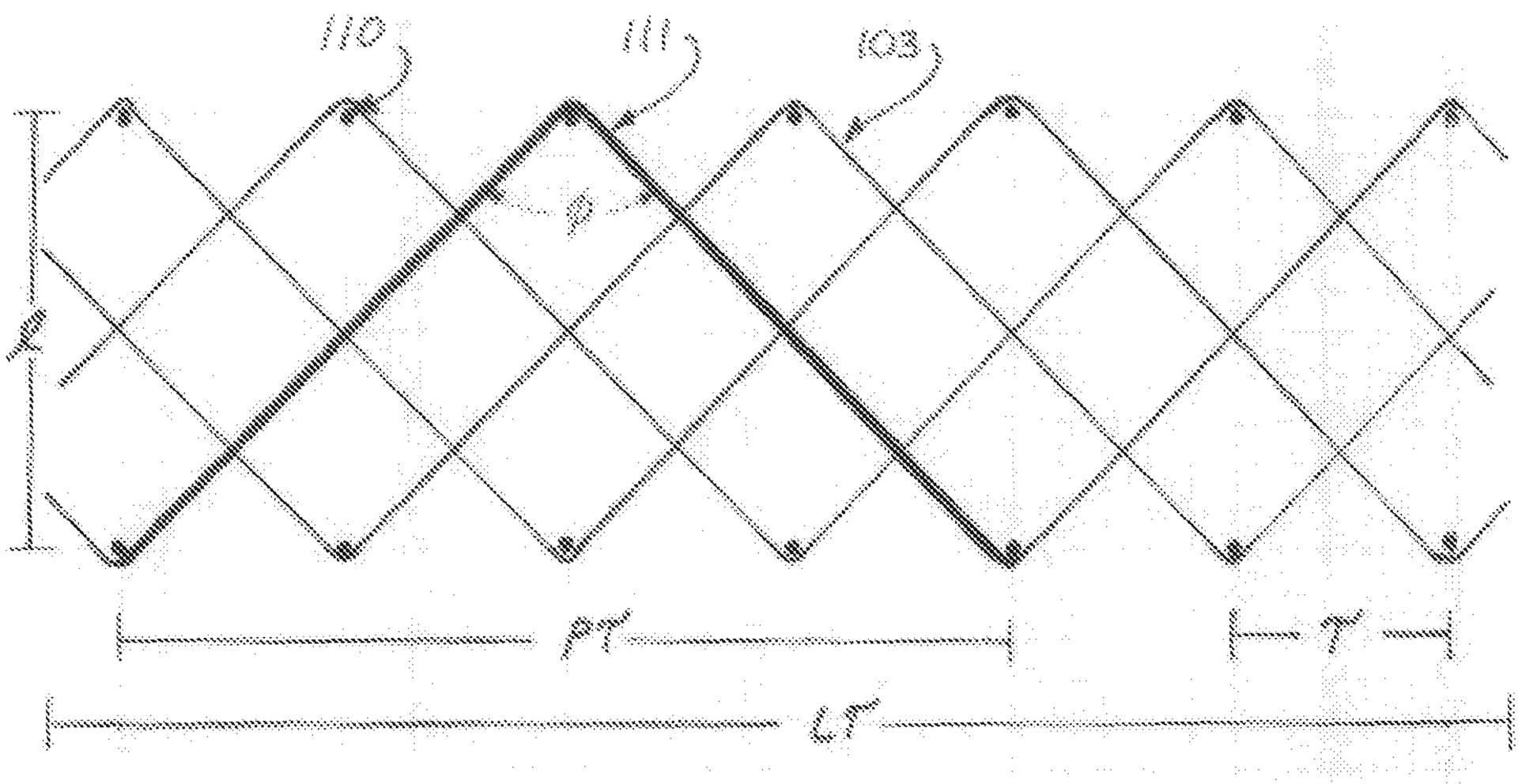


Fig. 11

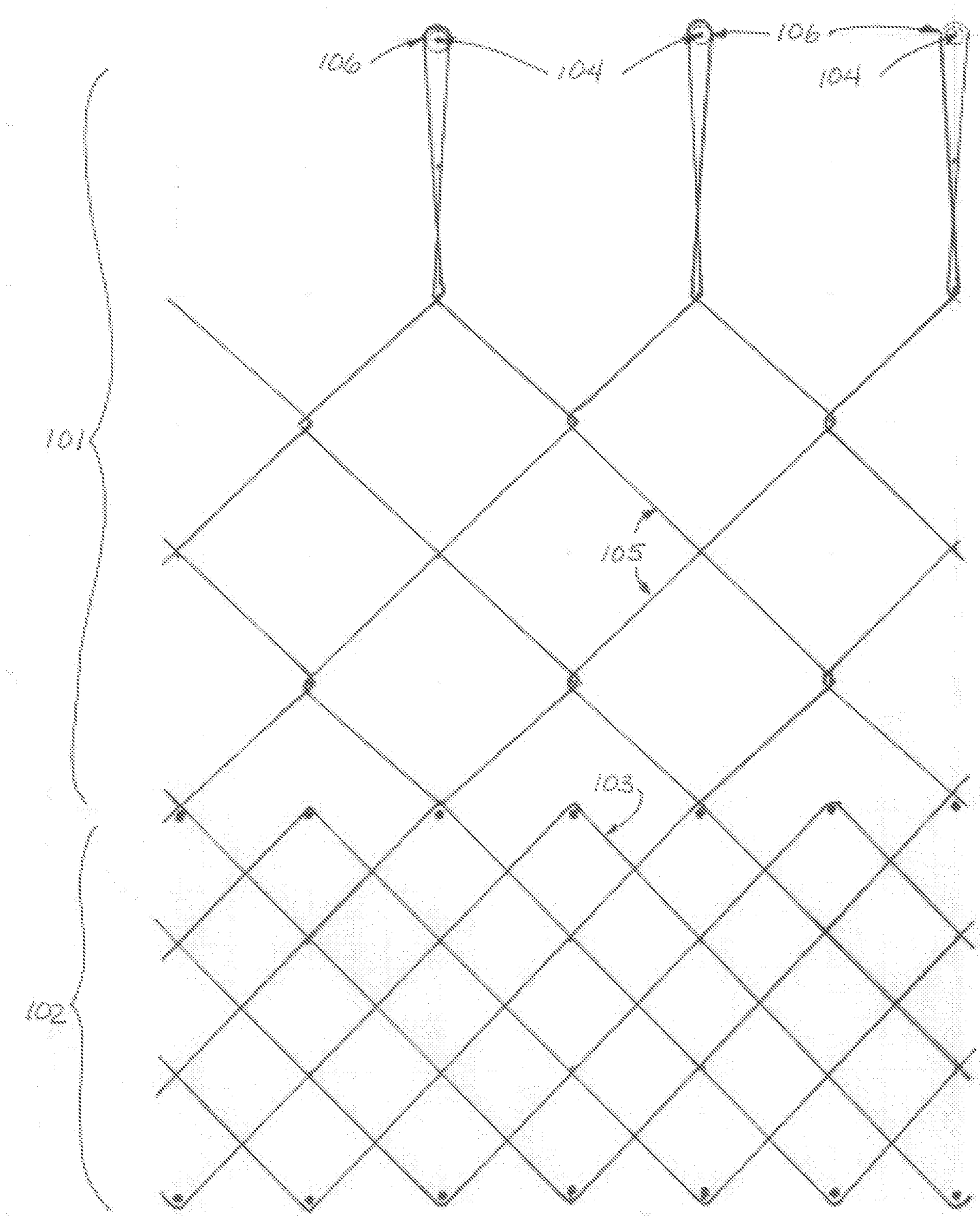


Fig. 12

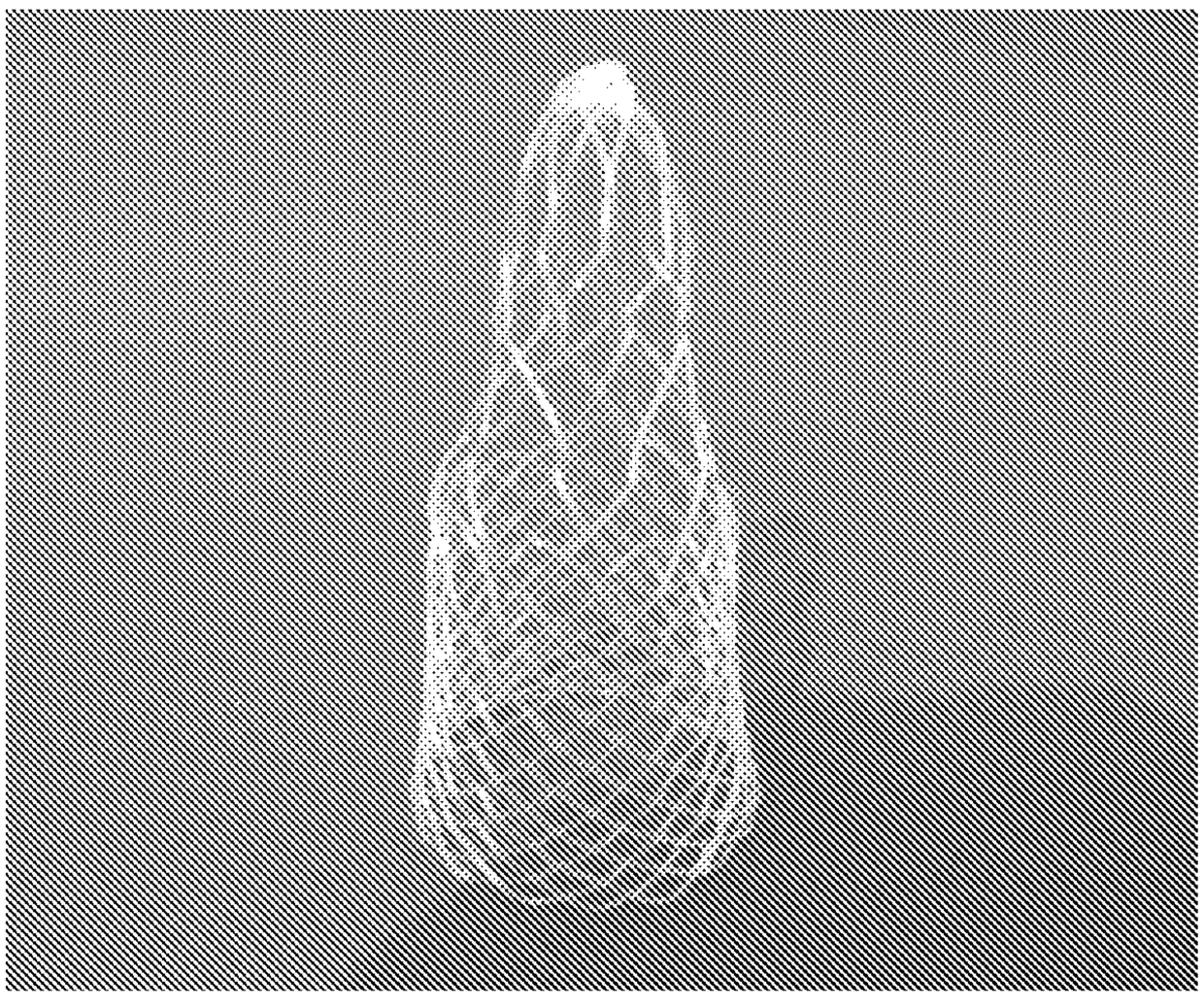

Fig. 13a

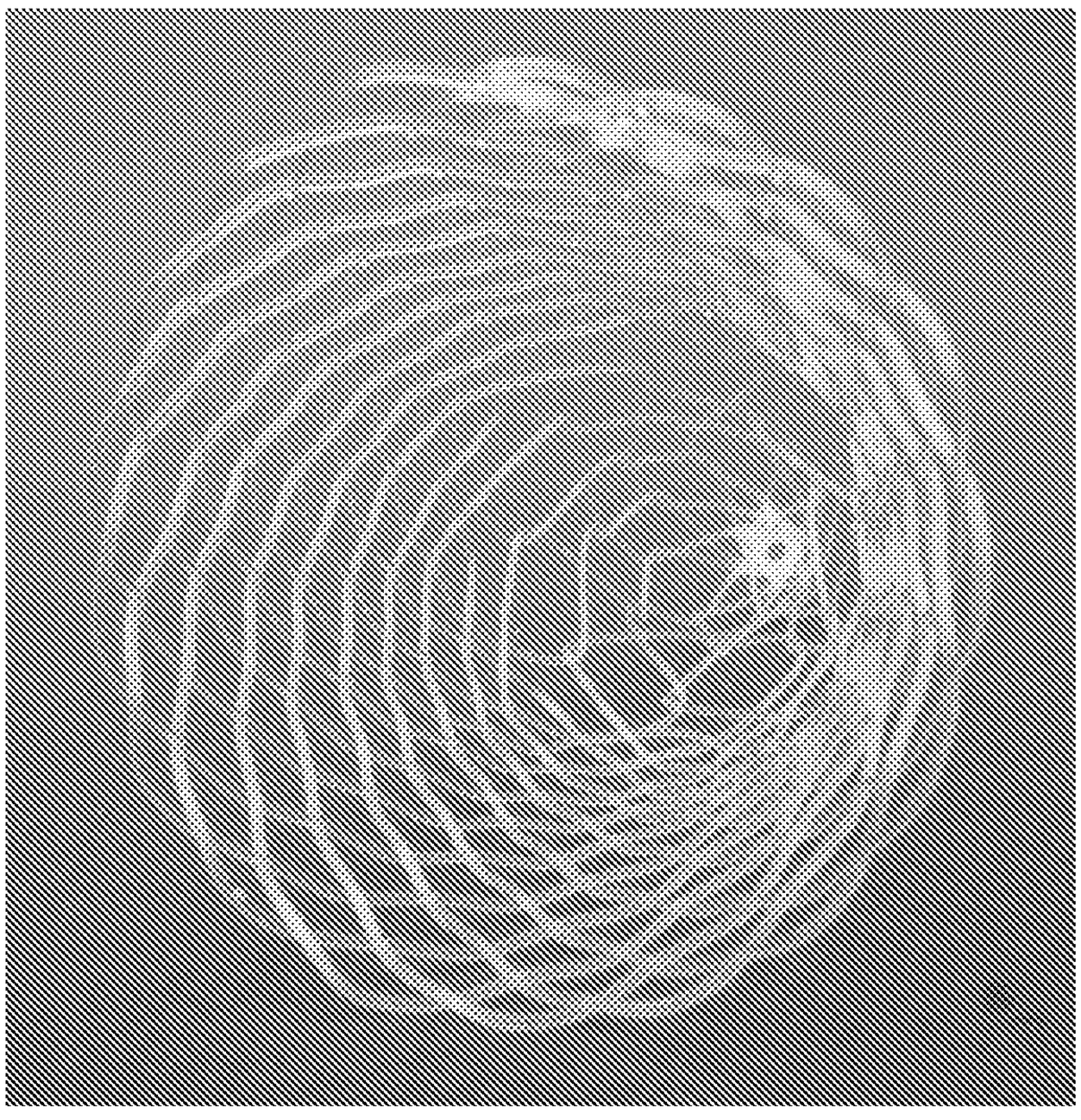

Fig. 13b

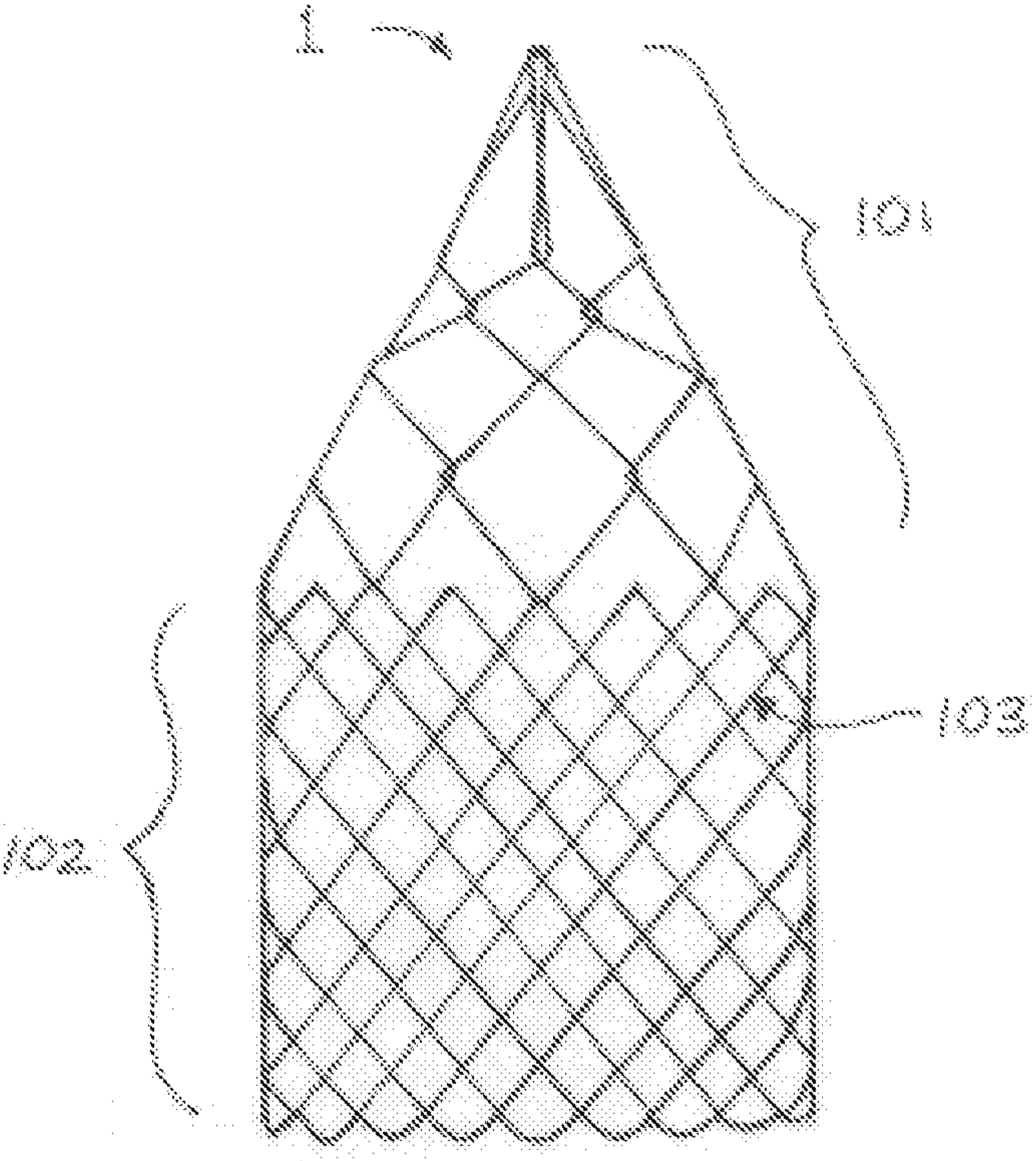


Fig. 10a