Aug. 11, 1959 R. C. PEARSON 2,898,605

WATER POWERED RETRACTABLE SHOWERHEAD

Filed July 13, 1955

FIG. 1

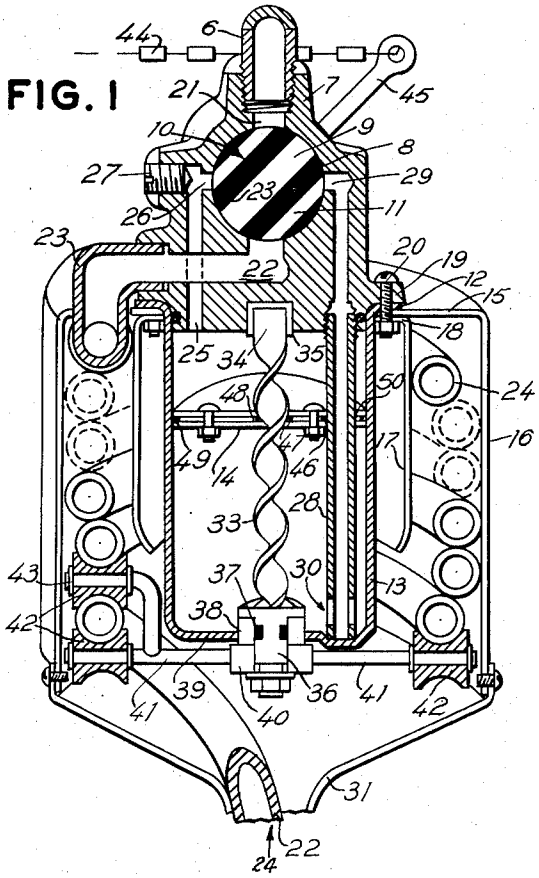

FIG. 3a

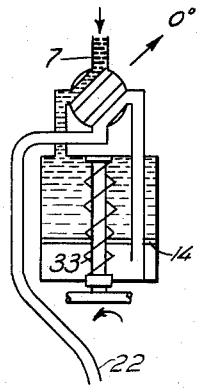

FIG. 3b

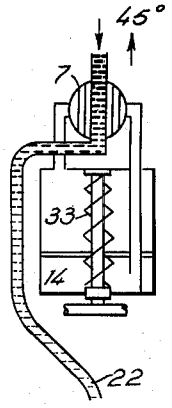

FIG. 3c

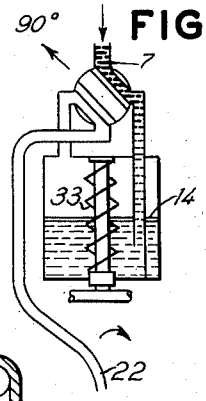

FIG. 2

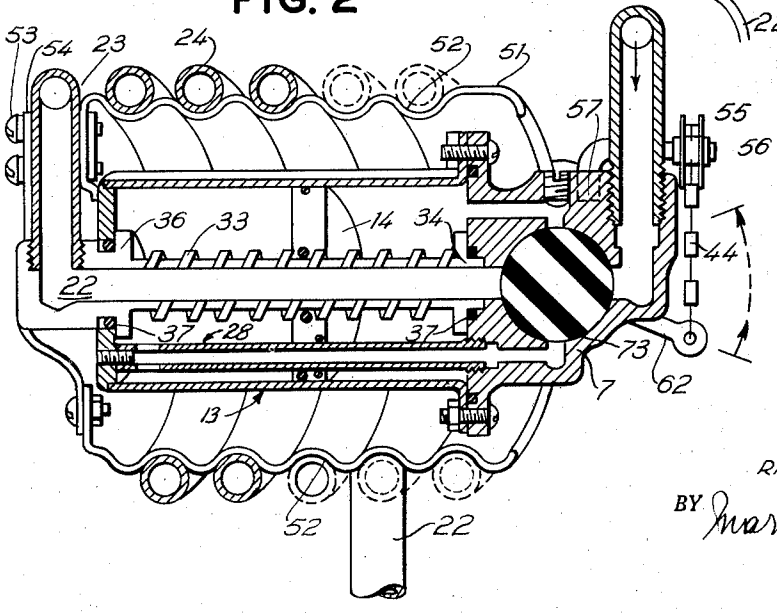

FIG. 3d

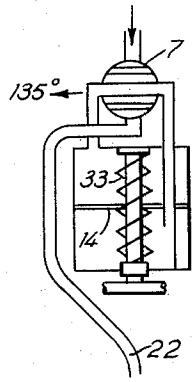

INVENTOR.
RAYMOND C. PEARSON
BY Marvin Elmer
ATTORNEY

United States Patent Office 2,898,605
Patented Aug. 11, 1959

2,898,605

WATER POWERED RETRACTABLE SHOWERHEAD

Raymond C. Pearson, Mount Vernon, N.Y.

Application July 13, 1955, Serial No. 521,935

2 Claims. (Cl. 4—145)

This invention relates to shower installations in bathrooms and the like, and particularly to what I choose to term a water powered retractable flexible showerhead.

The main object of my invention is to provide a shower unit that can be lowered into desired operative position into a bath tub by a simple downward manual movement of a valve handle and further controlled in novel and convenient manner.

An ancillary object is to have such a shower unit that is automatically locked in position at desired level, and in which water is turned on and the unit caused to spray water until no longer required, when the unit is automatically raised again above the user's head.

Another object of my invention is to have such an easily operated and controlled shower unit that during use may be turned, twisted and moved about at will in order to obtain maximum advantage and use of the shower in novel manner.

A further advantage of the invention is to have a shower device so convenient to use that it removes anxiety and tension from elderly people as well as those who are infirm, and is proof against causing loss of footing or injury due to slippery tub bottoms, by making it perfectly practical to carry out washing and rinsing while actually seated in the tub in complete safety and accessibility to the control valves.

An advantage and object that is likewise to be included is that young children and even their pets such as a cat or dog with them may be bathed readily because the shower unit can be so far lowered and manipulated as to produce a miximum concentration of spray with a minimum of splashing when they are rinsed.

It is also a practical object to have such a novel shower unit that may replace ordinary fixed installations.

Other objects and advantages of my invention will appear in greater detail as the specification proceeds.

In order to facilitate ready comprehension of my invention for a proper appreciation of the salient features of the same, the invention is illustrated on the accompanying drawings forming part hereof, and in which:

Figure 1 is a vertical section of a water powered retractable flexible shower head or unit made according to my invention and embodying the same in a practical form;

Figure 2 is a sectional view of a modification;

Figure 3*a* is a diagrammatic view of the device of Figure 1 showing a first stage in a cycle of operation of the shower unit;

Figure 3*b* is a similar view showing another stage in the cycle of operation;

Figure 3*c* is also a similar view showing a third stage of operation in the cycle; and

Figure 3*d* is likewise a diagrammatic view showing the fourth stage in the cycle of operation.

Throughout the views, the same reference numerals indicate the same or like parts and features.

Showers now on the market and as installed generally are mainly permanently fixed wall or ceiling mounted units. To be sure, there are to be found flexible shower units, but they lack any means for adjusting or maintaining their height or level, except by makeshift means, manual handling and fastening by hooks, clamps, vacuum cups and the like. Yet it is very much needed to have convenient and effective means available for freely adjusting and retaining a shower unit at any desired level. In addition to being convenient for the sake of convenience, such a unit must be easy to control and convenient to adjust without effort, because in a bath tub, a person located there is in a danger zone that must not be made lethal by any heavy or serious movements or burdens, else he may slip and suffer injury. Furthermore, convenient adjustment should also be possible so that the shower unit may be lowered with ease for use of sick or elderly people or even children, and likewise for mere washing and rinsing of the hair. Upon considering this problem, it has occurred to me that the shower unit should be completely controlled from special control valve and should be capable of a wide range of adjustments in more or less automatic manner. As a result of such consideration, I have succeeded in producing a valve controlled and water operated shower head or unit along the lines already indicated, which will now be described in detail in the following.

Hence, in the practice of my invention, and referring also again to the drawings, particularly to Figures 1, 3*a*, 3*b*, 3*c*, and 3*d*, the pipe **6** is connected to a cold and also hot water supply, such as the faucet of a bath tub (not shown) to which is connected a valve casing **7** within which is rotatably mounted a control valve **8** having a main water passage or channel **9** and two minor passages or channels **10** and **11**. To the lower end of casing **7** is secured the upper end flange **12** of a cylinder **13** in the chamber of which is located a vertically reciprocable piston **14**, the mentioned flange overlying the inner edge of the top **15** of a hose casing **16**, while cylindrical apron or guard **17** surrounds the cylinder **13** and has its upper end flange **18** secured beneath flange **12**, and these flanges all secured to the massive flange **19** of valve casing **7** by bolts **20** (one shown).

Pipe **6** communicates with the interior of the casing **7** by upper port **21**, while an opposite lower port **22** communicates with a shower hose connector **23** that is connected to a coiled hose **24** within hose casing **16**, about apron **17**. Piston **14** is operable by water pressure from the upper passage **25** connected to port **26** in the valve casing and adjustable by a set screw **27** for forcing the piston downwards. For shifting this piston upwards again, a depending tube **28** connects at its upper end with a side port **29** in the valve casing and at its lower end has a side port **30** by which it communicates with the interior of cylinder **13** below the piston. The purpose of this piston and its movement is to cause the hose **24** to unroll to a greater or lesser extent down through the bottom spout **31** so that a shower nozzle (not shown) below the lower end of the hose will be lowered to desired position.

The mentioned lowering of the shower nozzle by unrolling more or less of the hose is effected by means of an operating spiral or screw **33** having its upper end **34** cylindrical and rotatably mounted in a bearing **35**, while the lower end **36** mounted in O ring sealed bearing **37** rotating in outer race **38** located in the bottom **39** of the cylinder **13**. Fixed on the lower end of operating screw **33** is a hub **40** having a plurality of radial arms **41**, **41** extending therefrom and provided at their outer ends with the hose rollers **42**, **42**, and at one side with an auxiliary arm **43** with a similar roller **42** thereon clasping the hose **24** at diametrically opposite points within casing **16**.

The arrangement is such that, as also shown in Figures 3*a*, 3*b*, 3*c*, 3*d*, that when a bather pulls on the control chain **44** connected by lever **45** to valve **8**, it is but necessary to partly rotate this valve about 45° from its position of Figure 3*d* to that shown in Figures 1 and 3*a*, when water will flow from pipe **6** to port **26**, down passage **25** to the top of piston **14** and will force the latter down, and due to the sliding movement of this screw **33** through the piston, the screw will rotate and thereby rotate arms **42**, **43** and thus unroll the hose **24** thru spout **31**. Another pull on the chain **44** will rotate the valve **8** into the position shown in Figure 3*b*, through 45°, when the direct water supply from pipe **6** will pass down port **21** and valve passage **9** to port **22** and into the hose. At the same time, the other passages **25**, **28**, **29** and **30** are closed by valve **8** so that no water can flow in or out from above the piston or below it, and it is therefore locked in place, thereby locking the hose in place and, of course the nozzle thereon at attained height.

The piston is, naturally provided with a hole **46** to allow for tube **28** passing through it, while having a slot **47** for the feed screw **33**, there being packing **48** about the screw and marginal packing **49** about the piston as a whole against cylinder **13**. This packing in each case may be a special ring, if desired, and such a ring **50** may also be mounted about tube **28**. However, when the chain is pulled a third time through 45°, to the position shown in Figure 3*c*, water passes down through port **29**, tube **28** and passage **30** into the space below piston **14** and forces the same upward, winding up the hose again within casing **16** and thus retracting the lower end of the hose and its nozzle toward spout **31** again. In this position, the passage **10** in the valve interconnects the port **22** with port **26** and allows water or air from above the piston to escape through the hose, during rise of the piston. A final pull of the control chain will again rotate the valve 45° to the inactive position of Figure 3*d* wherein the water supply from pipe **6** is blocked and all operation cut off, with the hose retracted.

In Figure 2 is shown a form of the invention adapted for horizontal operation, the hose **24** is wound about a horizontal drum **51**. In this case, the lead screw **33** is hollow so as to serve for conducting the water flow from valve port **22** to shower hose connected **23**. Both bearing ends **34** and **36** of the lead screw are sealed to prevent water leakage by means of rubber O rings **37**. The lead screw preferably has multiple thread construction to give additional support against wobble of the piston and greater resistance to wear. The drum **51** is preferably contoured to properly locate the hose thereon in helical grooves **52** as it is wound up on this drum,

and also to impart side wall support and minimize flattening of the hose. Drum **51** is secured for its support and for rotation to shower hose connector **23** by means of bolts **53** and end plate **54**.

Operation of the control valve is the same as already described for Figures 1, 3*a* to 3*d*, the operating chain **44** passing over the pulley **55** supported on shaft **56**, which in turn is secured to valve body **7** by means of a socket hole and pin **57** or by any other known mechanical means.

Manifestly, variations may be resorted to, and parts may be modified or used without others within the scope of the appended claims.

Having now fully described my invention, I claim:

1. A water powered retractable showerhead comprising, in combination, a cylinder open at one end thereof and terminating in a bearing at the opposite end thereof, a piston slidably fitting in said cylinder and having an axially located threaded opening and an off-centered opening, a feed screw tube engaging said axial opening in said piston and extending through said bearing, a drum concentric with and surrounding said cylinder secured to said extension, a shower hose secured to and communicating with said extension and wound about said drum, a shower head mounted at the end of said hose, a valve casing adapted to be attached to a water supply pipe sealing the open end of said cylinder and having a plurality of passages and means for directing water under pressure to and from each side of said piston and to said showerhead, a fixed water delivery tube secured to said valve casing through said off-center opening in said piston to the bearing end of said cylinder, a valve plug in said valve casing with a plurality of channels for selective communication with said passages to control water supply to said piston and said showerhead, said feed screw tube being secured to and communicating with said passage for said showerhead.

2. The device of claim 1, wherein said feed screw tube consists of a cylindrical tube with a superimposed helically formed flat strip forming threads therewith.

References Cited in the file of this patent

UNITED STATES PATENTS

1,489,664	Dowrelio	Apr. 8, 1924
2,256,144	Gifford et al.	Sept. 16, 1941
2,707,467	Felzer et al.	May 3, 1955

FOREIGN PATENTS

459,502	Great Britain	Jan. 8, 1937
1,087,901	France	Sept. 1, 1954