(No Model.) 4 Sheets—Sheet 1.

D. B. MORISON.

WATER GAGE.

No. 456,629. Patented July 28, 1891.

Fig. 1

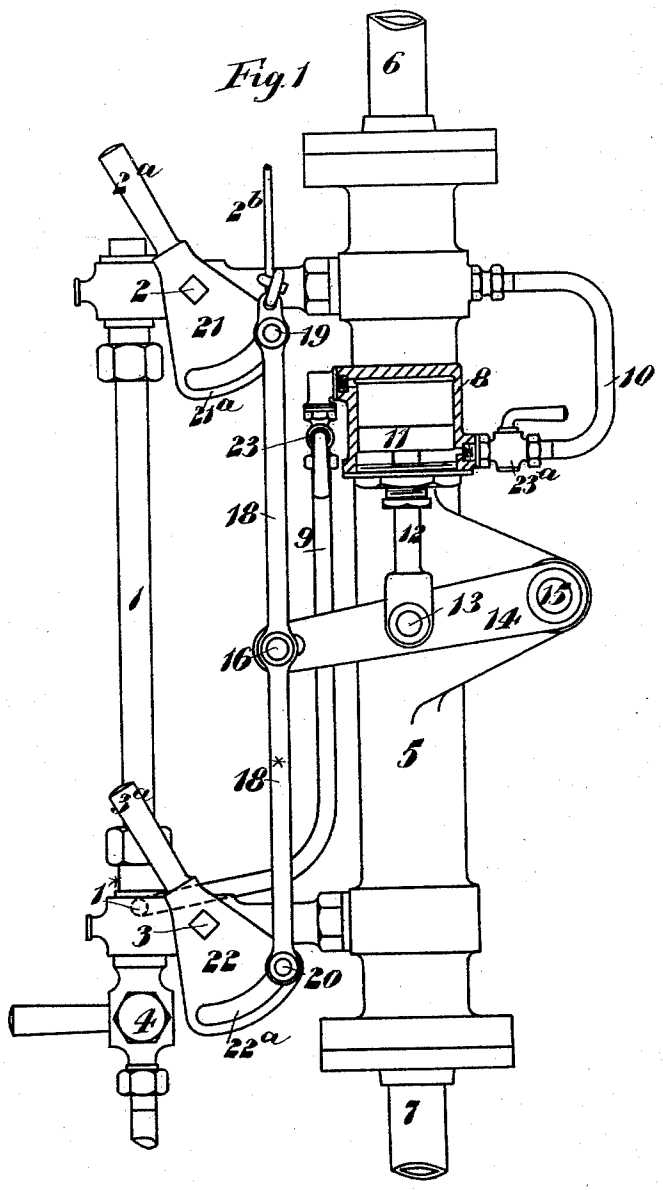

Witnesses:

E. Hall-Brown

L. D. Wingate.

Inventor

Donald Barns Morison

O. E. Duffy Atty

THE NORRIS PETERS CO., PHOTO-LITHO., WASHINGTON, D. C.

(No Model.) 4 Sheets—Sheet 2.

D. B. MORISON.

WATER GAGE.

No. 456,629. Patented July 28, 1891.

Fig. 2.

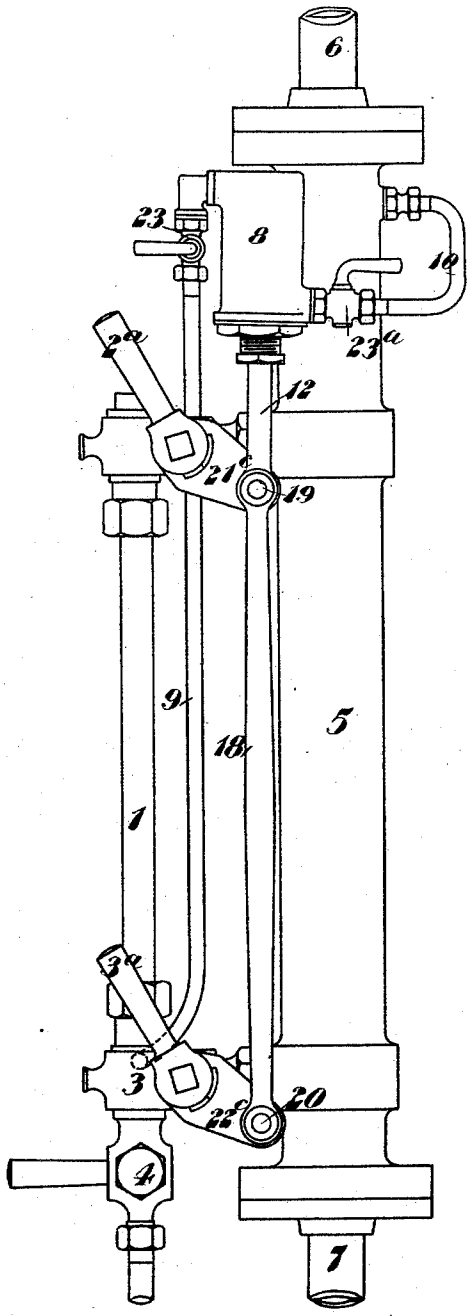

Fig. 7.

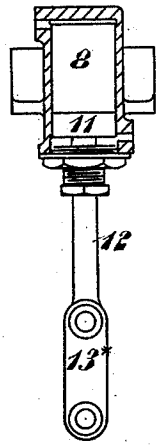

Fig. 8



Fig. 5

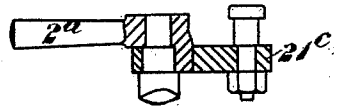

Fig. 6.

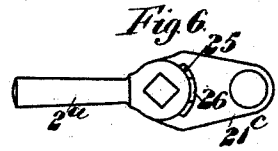

Witnesses:

E. Hall-Brown.

L. D. Wingate.

Inventor

Donald Harris Morison

O. Ehlhoffer atty

THE NORRIS PETERS CO., PHOTO-LITHO., WASHINGTON, D. C.

(No Model.) 4 Sheets—Sheet 3.

D. B. MORISON.

WATER GAGE.

No. 456,629. Patented July 28, 1891.

Fig. 9.

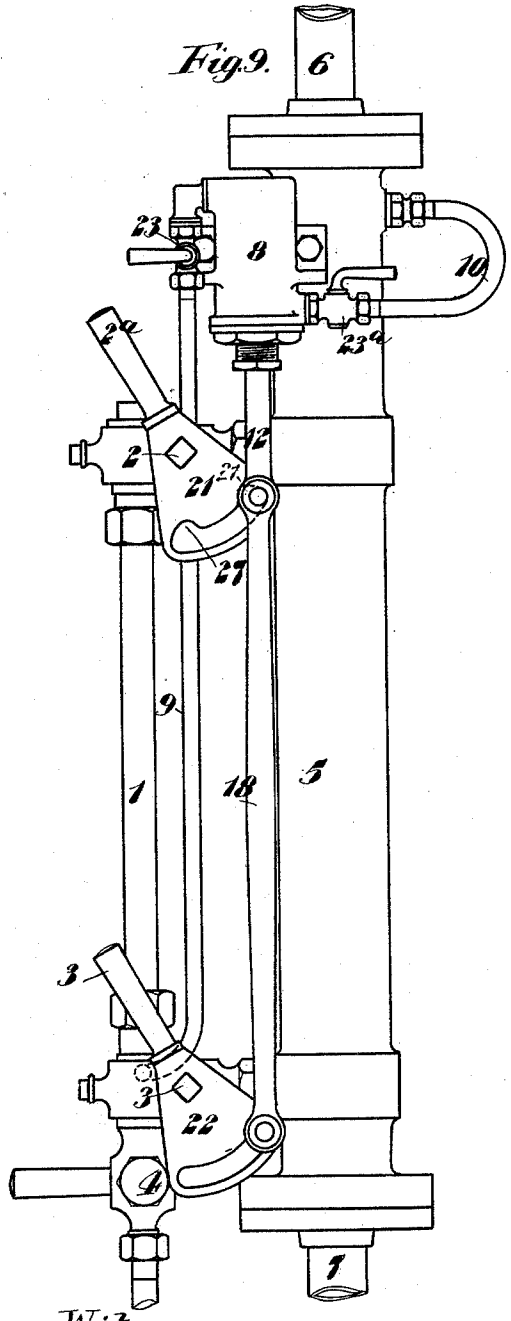

Fig. 13

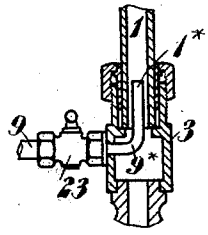

Fig. 3

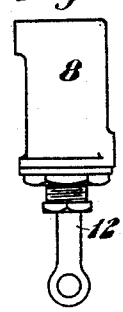

Fig. 4.

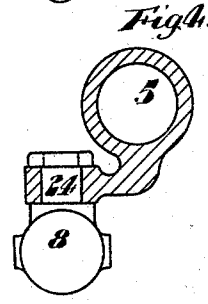

Witnesses:-

E. Hall-Brown.

L. D. Wingate.

Inventor

Donald Barns Morison

O. E. Duffy
atty

THE NORRIS PETERS CO., PHOTO-LITHO., WASHINGTON, D. C.

(No Model.) 4 Sheets—Sheet 4.

D. B. MORISON.

WATER GAGE.

No. 456,629. Patented July 28, 1891.

Fig. 10.

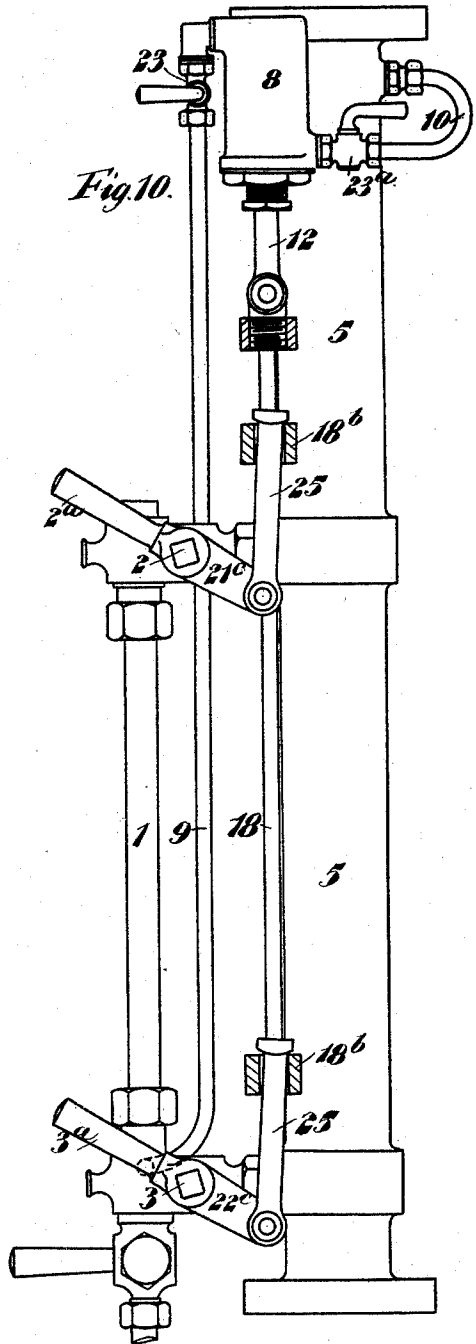

Fig. 11.

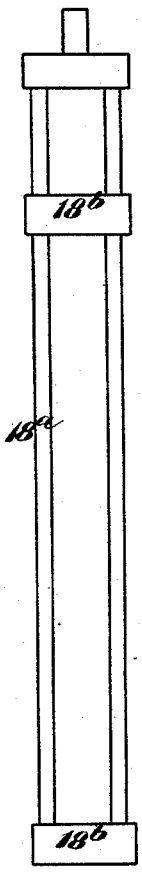

Fig. 12



Witnesses:

E. Hall-Brown

L. D. Mugate.

Inventor

Donald Barr Morison

O'Shaughnessy

Atty

THE NORRIS PETERS CO., PHOTO-LITHO., WASHINGTON, D. C.

UNITED STATES PATENT OFFICE.

DONALD BARNS MORISON, OF HARTLEPOOL, ENGLAND.

WATER-GAGE.

SPECIFICATION forming part of Letters Patent No. 456,629, dated July 28, 1891.

Application filed February 2, 1891. Serial No. 379,898. (No model.)

To all whom it may concern:

Be it known that I, DONALD BARNS MORISON, a subject of the Queen of Great Britain and Ireland, residing at Hartlepool, in the county of Durham, England, have invented a Water-Gage, with automatic device for shutting off steam or water, or both, on breakage of gage-glass, of which the following is a specification.

This invention has reference to the use, in combination with the water-gage of a steam-boiler, of an automatic device for shutting off steam or water, or both, in the event of the breakage of a gage-glass. The automatic device comprises a cylinder fitted with a piston or its mechanical equivalent, such as a vessel fitted with a diaphragm (hereinafter included in the expression "piston") connected with the steam-cock or with the water-cock, or with both cocks, and subjected on one side to a constant or practically constant pressure, such as the direct pressure of the boiler-steam or the action of a spring or weight, and on the other side to the pressure that exists for the time being in the gage-glass, the arrangement being such that normally the piston is at rest in a position in which one or both cocks are open; but should the gage-glass break, the pressure on one side of the piston will be reduced and the piston will move and close the cock or cocks with which it is connected, thus preventing escape of steam or water, or both, from the boiler.

In the accompanying drawings, Figure 1 is a side elevation, partly in section, of a water-gage with automatic closing device, according to this invention, the cocks being both connected to the device and being shown full open. Fig. 2 is a side elevation, and Figs. 3, 4, 5, and 6, detail views, of parts of a modified arrangement. Figs. 7 and 8 are detail views illustrating modified arrangements for connecting the piston-rod to the lever-arm of the cocks. Fig. 9 is a side elevation illustrating another modified construction. Fig. 10 is a side elevation partly in section, and Figs. 11 and 12 are detail views, of parts of another modified construction. Fig. 13 is a sectional detail view hereinafter referred to.

In the various figures corresponding parts are indicated by the same numeral.

In Fig. 1, 1 is the gage-glass, 2 the steam-cock, 3 the water-cock, and 4 the blow-off cock, of a steam-boiler water-gage of ordinary construction, carried by a hollow casting or pillar 5, also of ordinary construction, the interior of which is placed in communication at top and bottom, respectively, with the steam and water spaces of a boiler by the pipes 6 and 7. Mounted on the pillar 5 is a steam-cylinder 8, the upper end of which is in communication by a pipe 9 with the interior of the gage-glass 1, preferably at a point 1^+ (see Fig. 13) between the water-cock 3 and the lower end of the gage-glass. The lower end of the cylinder 8 communicates by a pipe 10 with the boiler by way of the pillar 5. Within the cylinder 8 is a piston 11 connected by a rod 12 and pin-and-slot connection 13 to a lever 14 fulcrumed at one end 15 to an extension of the pillar 5. The other end 16 of the lever 14 is jointed by means of pins to the rods 18 and 18^+, which carry at their ends pins 19 and 20 that enter slots formed in quadrants 21 and 22 connected with the plugs of the steam and water cocks 2 and 3, respectively. The quadrants 21 and 22 may be formed as extensions of the handles 2^a and 3^a of the cocks 2 and 3. Under ordinary working conditions the pressures in the two pipes 9 and 10 are equal, and consequently the pressure per square inch is the same on each side of the piston 11 in the cylinder 8. The areas of the two sides of the piston 11 are, however, unequal, due to the piston-rod 12, and the excess of pressure on one side is utilized to keep the piston at that end of its stroke corresponding with the gage-cocks 2 and 3, being fully open, as shown in Fig. 1. With this arrangement, should the gage-glass 1 break, the pressure in the pipe 9 will be reduced and the piston 11 will be forced to the other end of the cylinder 8 by the pressure of steam in pipe 10. This motion of the piston will be transmitted through the piston-rod 12, lever 14, and rod 18 to the quadrants 21 and 22, which will then be partly turned so as to close the gage-cocks 2 and 3. The quadrants 21 and 22 are preferably slotted, as shown at 21^a and 22^a, for the reception of the pins 19 and 20, respectively, in order to allow of the gage-cocks 2 and 3 being operated by hand independently of each other and of the automatic closing mechanism.

Three-way cocks 23 23^a, or their equivalent,

are preferably provided, as shown on the pipes 9 and 10, for the purpose of shutting off steam to allow of the automatic closing mechanism being brought quickly and easily into the position in which the gage-cocks 2 and 3 are fully open.

The quadrants 21 and 22 may be connected together by a rod to enable them to be operated simultaneously, and if desired they can be operated by means of a rod or wire rope 2^b from any place at a distance from the gage. The rod 18 may be arranged to close one of the cocks only; but obviously it is preferable to arrange it as shown, so as to close both cocks when necessary.

In the arrangement shown in Figs. 2 to 6, inclusive, the piston-rod 12 is directly connected to one of the levers—viz., 21^c—which is in this case journaled on the stem or plug of the cock 2, and the cylinder 8 is mounted on the pillar 5 by means of a trunnion 24, Figs. 3 and 4, to allow it to oscillate when the piston operates the lever-arm 21^c, which is shown connected by the link 18 to the lever-arm 22^c.

Figs. 5 and 6 show the lever-arm 21^c and 22^c in detail. Each lever is formed with a slot 25 to receive a projection 26 on the cock-handle.

With the parts in the position shown in Fig. 2, it will be seen that upward motion of the rod 18, produced by the piston-rod 12 will close both valves, the lower end of each slot 25 being in contact with the projection 26 therein, also that either valve can be closed by hand independent of the other or of the automatic closing mechanism.

If a link 13, as shown in Fig. 7, be used to connect the piston-rod 12 to the coupled quadrants or levers 21 and 22, or if the outer end of the piston-rod 12 be slotted, as at 12, Fig. 8, to receive a pin on the quadrant or lever 21 or 21^c, then the cylinder 8 may be fixed to the pillar 5.

In the arrangement shown in Fig. 9 the cylinder 8 may be fixed to the pillar 5, as shown, and the ends of the slot in the quadrant 21 widened or formed with notches 27 at each end to allow the piston-rod 12 to move in a straight line while the quadrant describes an arc of a circle, or the cylinder may be mounted on a trunnion 24, as shown in Figs. 3 and 4, so that the end of the piston-rod may accommodate itself to the motion of the quadrant. In this case the slots or notches 27 are not required.

In the arrangement illustrated in Figs. 10 to 12, inclusive, the cock-levers 21^c and 22^c are operated from the fixed cylinder 8 by means of links 25 25, that simply bear upon cross-pieces 18^b 18^b of a frame 18^a, Figs. 11 and 12, fixed to the piston-rod 12, so that upward motion of the piston-rod and frame 18^a will raise the cock-levers and close the cocks; but either cock can be closed by its handle, the corresponding link 25 simply rising in its cross-piece 18^b without lifting the frame 18^a and connected parts.

Fig. 13 shows the connection of the pipe 9 to the casing of the water-cock 3. 9 is an internal pipe secured to the pipe 9 and extending upward into the gage-glass to assist in allowing the water or steam in the pipe 9 and above the piston 11 to pass away freely in the event of breakage of the gage-glass.

As will be obvious, a flexible diaphragm, held at its periphery and connected at its center to a rod corresponding to the piston-rod 12, may be used in lieu of a piston, and this equivalent of the piston is included in the expression "piston" used in the claims.

What I claim is—

1. In combination with a water-gage for a steam-boiler, an automatic closing device comprising a vessel fitted with a piston subject on one side to a constantly-acting pressure and on the other side to the pressure that exists in the gage-glass, and connecting mechanism between said piston and a cock of said water-gage, for the purpose specified.

2. In combination with a water-gage for a steam-boiler, an automatic closing device comprising a vessel fitted with a piston subject on one side to a constantly-acting pressure and on the other side to the pressure that exists in the gage-glass, and connecting mechanism between said piston and the steam and water cocks of said water-gage, for the purpose specified.

3. In combination with a water-gage for a steam-boiler, an automatic closing device comprising a vessel fitted with a piston subject on one side to the direct pressure of boiler-steam and on the other side to the pressure that exists in the gage-glass, and mechanism connecting said piston to both of the gage-cocks, substantially as herein described, for the purpose specified.

4. In combination with a water-gage for a steam-boiler, an automatic closing device comprising a vessel fitted with a piston loaded at one side so as to have a constant tendency to move into a position in which it closes the gage-cocks and subject at the other side to the pressure that exists in the gage-glass, a hand-lever for operating said gage-cock, and connecting mechanism between said piston and cock, said connecting mechanism having a pin-and-slot connection at one part adapted to permit of said valve being operated by said hand-lever without moving said piston, substantially as herein described.

5. The combination, with the water-gage of a steam-boiler, of a lever fixed to the stem of one of the gage-cocks and formed with a slot, and an automatic closing device comprising a cylinder fitted with a piston having its rod connected to a pin extending into the slot in said hand-lever, said cylinder being in communication at that end through which the piston-rod passes with the steam-space of a boiler and at the opposite end with the inte-

rior of the gage-glass, substantially as herein described, for the purposes specified.

6. The combination, with the water-gage of a steam-generator, of levers fixed to the stems of the steam and water cocks of said water-gage and each formed with a slot fitted with a pin, a rod connecting the pins in said slots, and an automatic closing device comprising a cylinder fitted with a piston the rod of which is jointed to said connecting-rod, said cylinder being in communication at that end through which the piston-rod passes with the steam-space of a boiler and at the opposite end with the interior of the gage-glass, substantially as herein described, for the purposes specified.

7. The combination, with a water-gage, of levers 21 22, fixed to the steam and water cocks, respectively, of said water-gage, and each formed with a slot, a rod 18, connected to pins extending into the slots in said levers, a cylinder 8, fitted with a piston 11, having its rod 12 jointed to said rod 18, a pipe 9, provided with a cock and arranged to place the upper end of said cylinder in communication with the interior of the gage-glass, and a pipe 10, provided with a cock for placing the lower end of said cylinder in communication with the interior of a boiler, substantially as herein described.

In testimony whereof I have signed my name to this specification in the presence of two subscribing witnesses.

DONALD BARNS MORISON.

Witnesses:

FRED. SMITH,
Solicitor, West Hartlepool.

J. B. NEWBEGIN,
15 *Johnson Street, West Hartlepool.*