Feb. 10, 1948. C. C. WEATHERS ET AL 2,435,661

PENCIL SHARPENER

Filed June 25, 1946

FIG. 1.

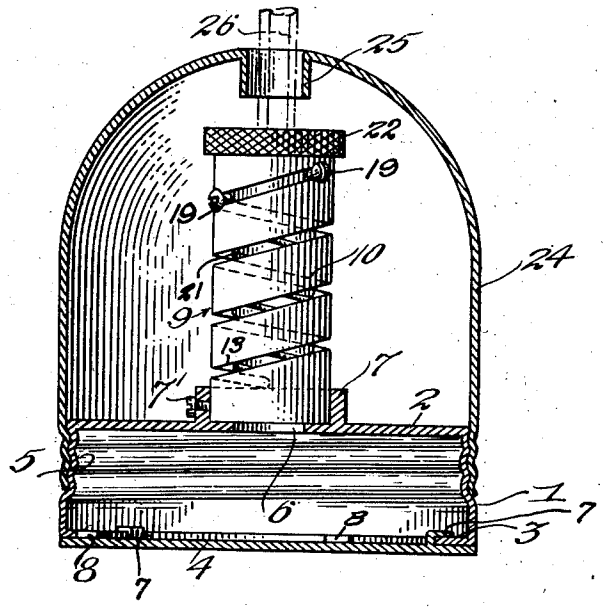

FIG. 2.

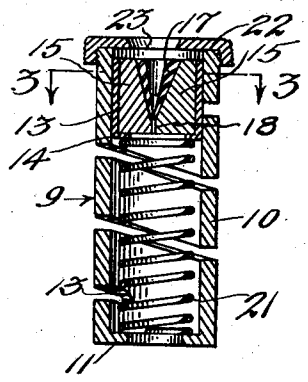

FIG. 4.

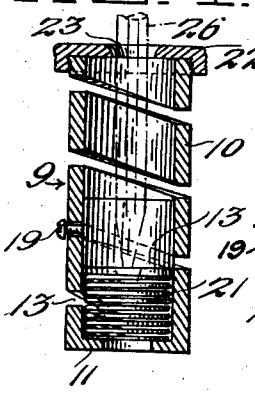

FIG. 5.

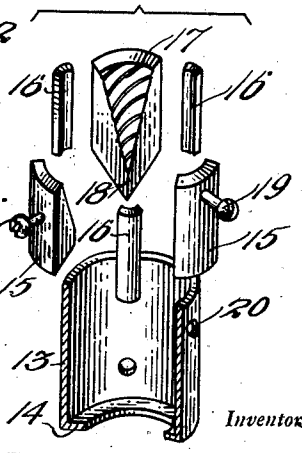

FIG. 3.

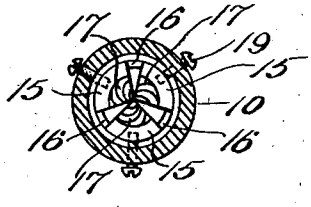

Inventors

AND Carl C. Weathers

Francis H. McMichael.

By Clarence A. O'Brien and Harvey B. Jacobson

Attorneys

Patented Feb. 10, 1948

2,435,661

UNITED STATES PATENT OFFICE

2,435,661

PENCIL SHARPENER

Carl C. Weathers and Francis H. McMichael,
Wichita, Kans.

Application June 25, 1946, Serial No. 679,249

2 Claims. (Cl. 120—96)

1

Our invention relates to improvements in pencil sharpeners the primary object in view being to provide an efficient sharpener of few parts and inexpensive construction adapted for easy operation by one hand and not required to be fastened to a fixed base, and which will not readily get out of order, nor break the pencil points.

To the accomplishment of the above, and subordinate objects presently appearing, a preferred embodiment of our invention has been illustrated in the accompanying drawing, set forth in detail in the succeeding description, and defined in the claims appended hereto.

In said drawing:

Figure 1 is a view in vertical section of our improved pencil sharpener in the preferred embodiment thereof,

Figure 2 is a view in vertical section of the sharpening unit detached and with the parts shown in normal position,

Figure 3 is a view in transverse section taken on a line 3—3 of Figure 2,

Figure 4 is a view similar to Figure 2 illustrating the manner in which the sharpening unit is operated, and

Figure 5 is a view in perspective illustrating the plunger, abrading jaws and the jaw spacers disassembled.

Referring to the drawing by numerals, according to our invention as illustrated, a pencil sharpener is provided including a base forming a shallow receptacle 1 of annular form having a top 2, an internal bottom edge flange 3, a detachable, disc-like bottom closure 4, and an externally threaded side wall 5. The top 2 is provided with an axial entrance aperture 6 into the receptacle surrounded by an upstanding, concentric, annular flange 7 of relatively larger diameter. The closure 4 is provided with right angled keeper lugs 7 fitting over the flange 3 to attach said closure and adapted, by turning of said closure to be registered with notches 8 in said flange 3 and withdrawn through said notches, whereby said closure may be detached at will.

The top 2 of the receptacle 1 supports a sharpening unit 9, the basic element of which is a hollow cylinder 10 having an internal lower end flange 11, and the lower end of which is detachably secured in the flange 7 to rest on the top 2 with the cylinder axially aligned with the aperture 6 in communication therewith and said lower end fitting in said flange 7. A set screw 7' threaded into the flange 7 secures the cylinder 10 in the flange. The cylinder 10 is formed, between

2

the lower and upper ends thereof with a spiral through slot 13 therein of comparatively steep pitch as regards the convolutions thereof.

A hollow cylindrical plunger 13 with an internal bottom end flange 14 is slidably fitted in the cylinder 10 to normally occupy a position in the upper end of said cylinder 10.

A plurality of vertically elongated abrading jaws 15, of substantially segmental form in cross-section, are fitted in the plunger 13 to rest on the flange 14 and are spaced apart equidistantly in said plunger circumferentially thereof. Strip-like, transversely arcuate spacer bars 16 are interposed between the abrading jaws 15. The abrading jaws 15 are provided with spirally ribbed inner abrading faces 17 converging downwardly, relatively, in substantially conical formation to sharpen the wood portion of a pencil, in the usual manner, and below said faces 17, the abrading jaws are provided with a sharp edge 18 designed to sharpen the lead of a pencil in a manner presently clear. The edges 18 are spaced apart, as will be understood, to permit the lead of a pencil to enter between the same. Machine screws 19 extending through the slot 13 and through apertures 20 in the plunger 13 into the abrading jaws 19 fasten said jaws in said plunger and co-act with said slot 13 to impart rotary movement to the plunger 13 and said jaws 15 as will be understood. The spacer bars 16, it may be explained, are designed to be interposed between said jaws 15 with a wedge fit to secure the same in proper position in which a clear space is provided between said jaws inwardly of the spacer bars.

A helical expansion spring 21 in the cylinder 10 is interposed between the flange 11 of said cylinder and the flange 14 of the plunger 13 and yieldingly resists movement of said plunger from normal position established by engagement of one of the machine screws 19 with the upper end of the slot 13.

An annular pencil guide 22 of cap-like form is threaded onto the upper end of the cylinder 10 and provided with a central aperture 23 in the vertical axis of the plunger 13 adapted to guide a pencil inserted therethrough into the space between the faces 17 of the jaws 15.

A hollow dome-like shell 24 is threaded at its lower end onto the side wall 5 in covering relation to the sharpening unit 9 and is provided in the top thereof with a depending pencil guiding sleeve 25 in the vertical axis of said unit.

The manner in which the described invention is designed to be operated will be readily under-

stood. A pencil to be sharpened is inserted downwardly through the sleeve 25 and aperture 23, as shown in Figures 1 and 4, until the writing end thereof engages the abrading faces 17 of the abrading jaws 15 and is then thrust downwardly against said faces to move said jaws 15 and the plunger 13 downwardly in opposition to the spring 21. During such downward movement of the jaws 15 and plunger 13, the machine screws 19 and the spiral slot 13 cause, in the manner which will be clear, the plunger 13 to be rotated, in one direction, and also the jaws 15 so that the abrading faces 17 of said jaws 15 are revolved about the writing end of the pencil, designated 26, to sharpen the same. Upon withdrawing the pencil 26, the spring 21 returns the plunger 13 and jaws 15 to normal position. The cuttings fall through the space between the jaws 15, through the bottom end of the plunger 13 into the cylinder 10, and from said cylinder, through the aperture 6, into the receptacle 1. When the receptacle 1 is full of cuttings it may be emptied by detaching the closure 4 in the manner already described.

The foregoing, it is believed, will suffice to impart a clear understanding of our invention, without further explanation.

Manifestly, the invention, as described, is susceptible of modification without departing from the inventive concept, and right is herein reserved to such modifications as fall within the scope of the appended claims.

What we claim is:

1. In a pencil sharpener, a base forming receptacle having a top provided with an entrance aperture therein, a sharpening unit comprising a hollow cylinder upstanding from said top coaxially with said aperture and provided with a helical slot therein, a hollow plunger slidably and rotatably fitted in said cylinder, for movement downwardly therein from a normal position in the upper end of the cylinder, abrading jaws in said plunger grouped around the axis of the same and having inner abrading faces converging downwardly relatively for sharpening the end of a pencil thrust downwardly against the same to thrust said jaws and plunger downwardly, means securing said jaws in said plunger and extending through said slot for co-action therewith to cause the plunger to rotate upon downward movement thereof, and spring means in said cylinder yieldingly maintaining said plunger in said normal position, said plunger being open at the bottom thereof to permit cuttings to fall into the cylinder to drop through said aperture into the receptacle.

2. In a pencil sharpener, a base forming receptacle having a top provided with an entrance aperture therein, a sharpening unit comprising a hollow cylinder upstanding from said top coaxially with said aperture and provided with a helical slot therein, a hollow plunger slidably and rotatably fitted in said cylinder for movement downwardly therein from a normal position in the upper end of the cylinder, abrading jaws in said plunger grouped around the axis of the same and having inner abrading faces converging downwardly relatively for sharpening the end of a pencil thrust downwardly against the same to thrust said jaws and plunger downwardly, means securing said jaws in said plunger and extending through said slot for co-action therewith to cause the plunger to rotate upon downward movement thereof, and spring means in said cylinder yieldingly maintaining said plunger in said normal position, said plunger being open at the bottom thereof to permit cuttings to fall into the cylinder to drop through said aperture into the receptacle, said jaws being spaced apart to provide for cuttings passing downwardly between the same.

CARL C. WEATHERS.
FRANCIS H. McMICHAEL.

REFERENCES CITED

The following references are of record in the file of this patent:

UNITED STATES PATENTS

Number	Name	Date
432,789	Burger	July 22, 1890
819,123	Clough	May 1, 1906