July 21, 1931. B. W. HARRIS 1,815,300

HYPODERMIC BULLET

Filed June 21, 1928

Fig. 1

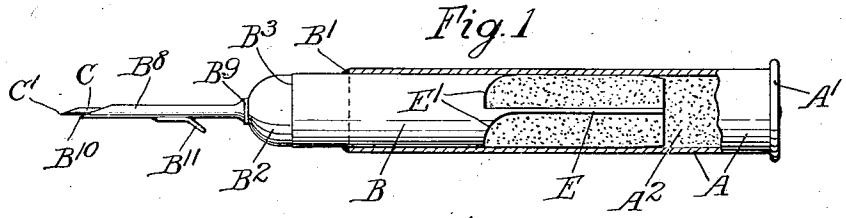

Fig. 2

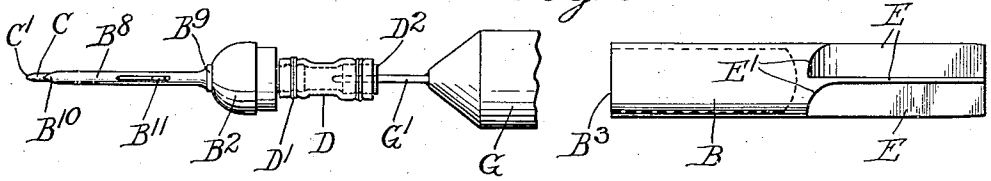

Fig. 3

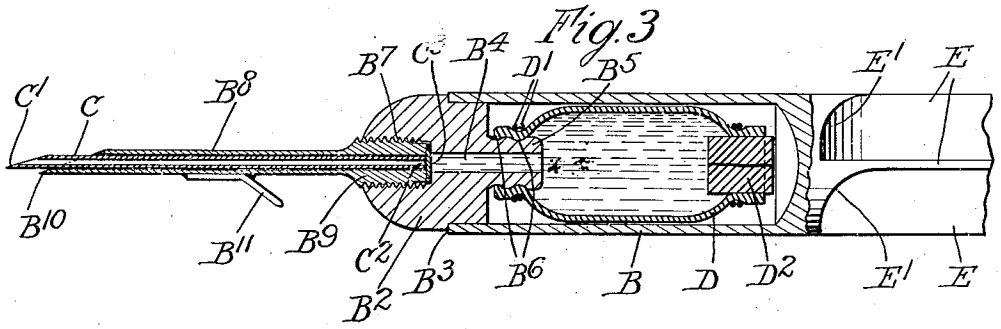

Fig. 4

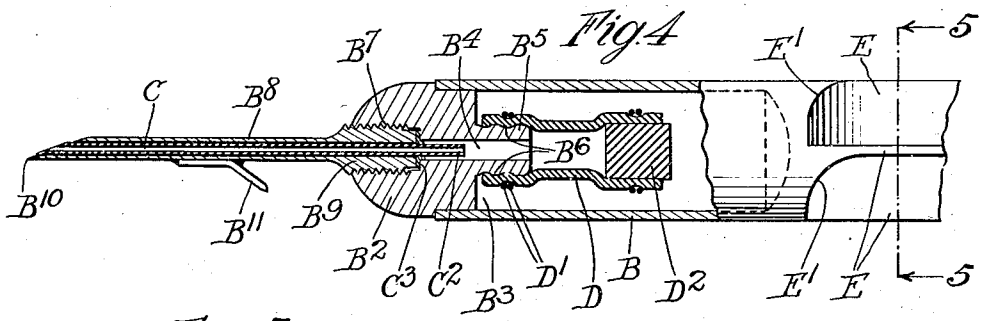

Fig. 5

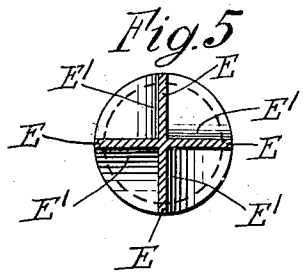

Inventor
Barnett W. Harris
by Parker & Carter
Attorneys.

Patented July 21, 1931 1,815,300

UNITED STATES PATENT OFFICE

BARNETT W. HARRIS, OF NEW YORK, N. Y.

HYPODERMIC BULLET

Application filed June 21, 1928. Serial No. 287,115.

My invention relates to a bullet or shell in which the bullet portion proper includes or is replaced by means for injecting into the target a fluid or chemical effective to drug or paralyze the animal struck. One object is to provide a hypodermic or injector bullet for game shooting. Another object is the provision of means for preventing the separation of the hypodermic from the target or animal struck. Another object is the provision of means for insuring an immediate and relatively complete discharge of the chemical into the body of the animal upon contact of the bullet with the animal.

Other objects will appear from time to time in the course of the specification and claims.

I illustrate my invention more or less diagrammatically in the drawings, wherein—

Figure 1 is an elevation of the bullet with parts of the cartridge case broken away;

Figure 2 illustrates the charging of the bullet;

Figure 3 is a longitudinal section of a charged bullet;

Figure 4 is a longitudinal section of a bullet from which the hypodermic charge has been withdrawn; and

Figure 5 is a section on the line 5—5 of Figure 4.

Like parts are indicated by like symbols throughout the specification and drawings.

A indicates any suitable cartridge having a rim A^1 limiting its forward movement in the chamber of the rifle, shotgun or other arm with which it is used. Obviously any desired form of shell or cartridge may be employed, its details forming no part of the present invention. A^2 indicates any suitable propulsive charge of powder or the like.

Seated in the shell is the cylinder B which may be held in position either by its close fit with the interior of the cartridge A or by any suitable substance B^1, such as wax or the like. B^2 generally indicates a closure member for closing the forwardly open end B^3 of the cylinder B. It is axially apertured as at B^4 such aperture extending inwardly through an inward extension B^5 which may be circumferentially channeled or grooved as at B^6. B^7 indicates an interiorly screwthreaded aperture in communication with the aperture B^4. It receives the screwthreaded expanded portion B^9 of the hollow hypodermic needle B^8 with its sharp point B^{10}. B^{11} indicates any suitable prong or barb.

Mounted within the needle B^8 is a hollow pin C forwardly sharpened as at C^1. Its rear end C^2 engages an inner closure or seal C^3 of lead or the like, which normally separates the aperture or passage B^4 from the interior passage of the needle B^8 on the pin C.

D indicates a cylindrical sac or container which may be of any suitable yielding material, for example rubber. One end is secured about the member B^5 as by wires or cords D^1. The other end is closed by a yielding cylindrical plug D^2.

E E indicate vanes each of which has at its base the rounded or inclined surface E^1.

It will be realized that whereas I have described and shown a practical and operative device, nevertheless many changes might be made in the size, shape, number and disposition of parts without departing from the spirit of my invention. I therefore wish my description and drawings to be taken as in a broad sense illustrative and diagrammatic rather than as limiting me to my specific showing.

The use and operation of my invention are as follows:

It is extremely desirable in game hunting and particularly in big game hunting to be able to take animals alive. This is particularly the case in hunting specimens for menageries, although of course my bullet is not limited to such use. I have therefore developed a bullet which may be shot from a gun as with an ordinary bullet or cartridge, or which may be used as a rifle grenade. The bullet, instead of being formed to penetrate and kill or wound the animal or target, is armed with a hypodermic needle which penetrates the skin of the animal. When the needle hits the animal the pin C^1 is thrust back through the needle against the seal or inner closure C^3, which it ruptures. When the closure is ruptured the compression of the yielding sac forces the hypodermic

charge outwardly through the pin and into the animal.

The barb prevents the displacement of the bullet from the animal and insures that once the needle has sunk into the skin of the animal and the charge has been released, the charge will be able to flow uninterruptedly through the needle until it is exhausted. The vanes E hold the bullet in its course and prevent tumbling. The inclined or curved surfaces E^1 cause, in response to the explosion of the charge A^2, a rotation of the bullet body about its axis of forward movement, thus further tending to keep the bullet true in its path, with the needle forwardly extending along the axis of forward movement of the bullet.

In filling the bullet, as illustrated in Figure 2 any suitable filling container, diagrammatically indicated as G in Figure 2, may be employed.

Associated with the filling container G may be the needle G^1 which may be thrust through the plug D^2 to permit the charge to be expelled from the container G in order to fill the sac D under pressure. When the needle G^1 is withdrawn the yielding substance of the plug D^2, which may for example be of rubber, seals up the hole, which sealing tendency is further increased by the inward pressure against the plug D^2.

I claim:

1. In a hypodermic bullet, a bullet body, a needle forwardly projecting therefrom, a container within the bullet body, adapted to contain a chemical charge, a closure normally interposed between such container and the needle, and means, responsive to the impact of the bullet against its target, for opening such closure and for permitting the escape of the charge through the needle.

2. In a hypodermic bullet, a bullet body, a needle forwardly projecting therefrom and normally fixed in relation thereto, and means within the bullet body for normally maintaining said charge under pressure.

3. In a hypodermic bullet, a bullet body, a needle forwardly projecting therefrom and normally fixed in relation thereto, and means for normally maintaining said charge under pressure, the means for containing the closure including a hollow pin positioned within the needle and longitudinally movable in relation thereto.

4. In a hypodermic bullet, a bullet body, a needle forwardly projecting therefrom and normally fixed in relation thereto, and means for normally maintaining said charge under pressure, the means for containing the closure including a hollow pin positioned within the needle and longitudinally movable in relation thereto, and means for normally holding said hollow pin against movement in relation to said needle.

5. In a hypodermic bullet, a bullet body, a needle forwardly projecting therefrom and normally fixed in relation thereto, and means for normally maintaining said charge under pressure, the means for containing the closure including a hollow pin positioned within the needle and longitudinally movable in relation thereto, the inner end of said pin being adapted to engage and to rupture said closure in response to the impact of the bullet.

6. In a hypodermic bullet, a bullet body, a needle forwardly projecting therefrom, a yielding container positioned within the bullet body and adapted to contain a chemical charge and to maintain it under pressure, a closure normally interposed between such container and the needle, and means responsive to the impact of the bullet against its target, for opening such closure and permitting the escape of the charge through the needle.

7. In a hypodermic bullet, a bullet body, a needle forwardly projecting therefrom, a yielding container positioned within the bullet body and adapted to contain a chemical charge and to maintain it under pressure, a closure normally interposed between such container and the needle, and means responsive to the impact of the bullet against its target, for opening such closure and permitting the escape of the charge through the needle, the yielding container being provided with a yielding plug in one end thereof, such plug being adapted to be pierced for the injection of the charge contained in the container, and being adapted to seal itself in response to pressure from within the container.

8. In a hypodermic bullet, a bullet body, a needle forwardly projecting from the forward end therefrom, and means for centering such bullet in its flight with the needle forwardly projecting along the axis of flight of the bullet, such means including vanes rearwardly extending from the bullet body and lying in planes generally parallel with the long axis of the bullet body, there being surfaces at the base of said vanes adapted, in response to the explosion of a propulsive charge, to cause rotation of the bullet body.

9. In a hypodermic bullet, a generally cylindrical bullet body, guiding vanes associated with one end of the body and a hypodermic needle mounted at the opposite end of the body, a container within the body and means for maintaining a hypodermic charge under pressure therein, a closure intermediate the needle and such charge and means for breaking said closure in response to the impact of the bullet body against its target.

10. In a hypodermic bullet, a bullet body and a forward closure member therefor, a yielding container within said body secured to said forward closure, a passage forwardly extending through said forward closure, a needle mounted in said forward closure, a

seal interposed between said needle and said passage and means for rupturing said seal in response to the impact of said bullet.

11. In a hypodermic bullet, a bullet body and a forward closure member therefor, a yielding container within said body secured to said forward closure, a passage forwardly extending through said forward closure, a needle mounted in said forward closure, a seal interposed between said needle and said passage and means for rupturing said seal in response to the impact of said bullet, including a hollow pin mounted within said needle and adapted for longitudinal movement in relation to said needle.

Signed at New York city, county of New York and State of New York, this 29th day of March, 1928.

BARNETT W. HARRIS.