No. 620,076. Patented Feb. 21, 1899.

J. L. KENDRICK.

NON-REFILLABLE BOTTLE.

(Application filed Nov. 5, 1898.)

(No Model.)

Fig. 1

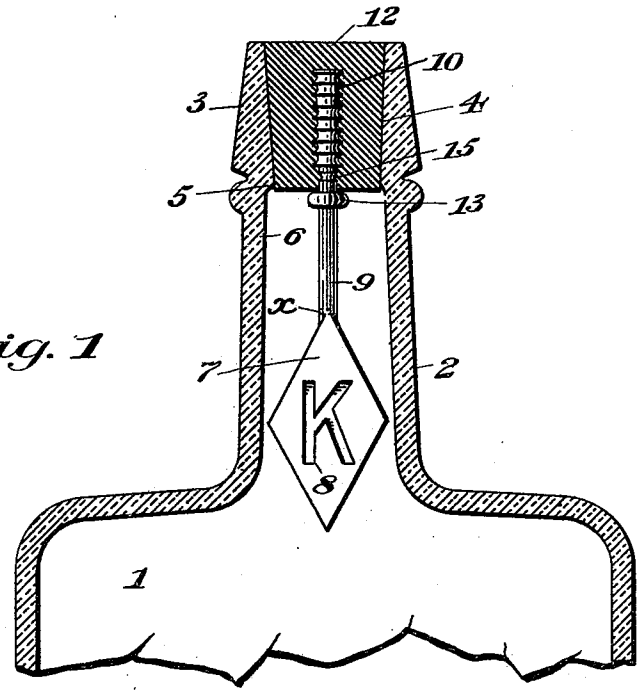

Fig. 2

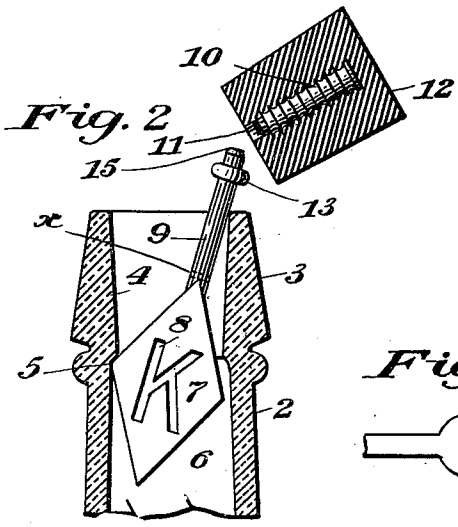

Fig. 4

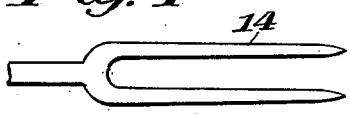

Fig. 3

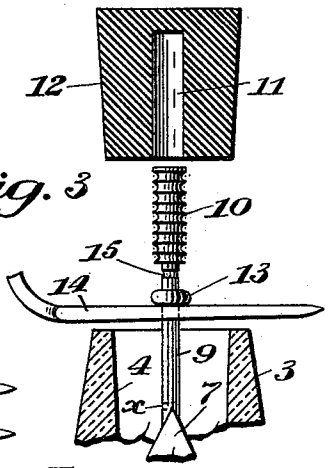

Witnesses

J. L. Thorne

L. Pattie

Inventor

John L. Kendrick,

by John Elias Jones,

his Attorney.

THE NORRIS PETERS CO., PHOTO-LITHO., WASHINGTON, D. C.

UNITED STATES PATENT OFFICE.

JOHN L. KENDRICK, OF CINCINNATI, OHIO.

NON-REFILLABLE BOTTLE.

SPECIFICATION forming part of Letters Patent No. 620,076, dated February 21, 1899.

Application filed November 5, 1898. Serial No. 695,537. (No model.)

To all whom it may concern:

Be it known that I, JOHN L. KENDRICK, a citizen of the United States, residing at Cincinnati, in the county of Hamilton and State of Ohio, have invented certain new and useful Improvements in Non-Refillable Bottles; and I do declare the following to be a full, clear, and exact description of the invention, such as will enable others skilled in the art to which it appertains to make and use the same, reference being had to the accompanying drawings, and to the figures of reference marked thereon, which form a part of this specification.

This invention relates to certain improvements in what are commonly termed "non-refillable" bottles, and has for its object to provide a bottle of this class having new and improved means for detecting the genuineness of goods sold in original packages, the device being of such a nature as not in any way to interfere with the use of the bottle for purposes other than that of holding spurious goods.

The invention consists in certain novel features of the construction, combination, and arrangement of the several parts of the improved bottle, whereby certain important advantages are attained and the device is made simpler, cheaper, and otherwise better adapted and more convenient for use than various other forms of non-refillable bottle heretofore employed, all as will be hereinafter fully set forth.

The novel features of the invention will be carefully defined in the claims.

In the accompanying drawings, which serve to illustrate the invention, Figure 1 is a sectional view taken through the upper part of a bottle having its neck provided with an original-package-detecting device embodying my improvements, and Fig. 2 is a similar sectional view taken through the neck of the bottle and showing the parts as they appear when the cork is being removed. Fig. 3 is a sectional view showing the form of the several parts in position for filling and corking, and Fig. 4 is a fragmentary view showing a tool designed for use in corking bottles provided with my improvements.

In the views, 1 indicates the body portion of the bottle, which may be of any shape, and 2 indicates the neck portion thereof, having at its upper end a fillet or corona 3, such as is generally applied after the completion of the body and neck in the course of the manufacture of the bottle. The fillet 3 is made with a mouth portion 4, tapered in the usual way toward the bottle-neck 2, the diameter of the interior cavity 6 of which is made greater than the smallest diameter of said mouth 4, so as to form between the two an annular projection or shoulder 5.

7 indicates the detector, herein shown as formed of a lozenge-shaped piece of material, such as glass, &c., although it may be made in any form and of any material having pressed or otherwise produced upon it any suitable trade-mark or inscription, such as is indicated at 8 in the drawings. The body portion 7 of the detector is formed with an integral fragile stem 9, having at its upper end an enlarged portion or head 10 formed with a series of annular grooves or corrugations, and the dimensions of said body portion 7 are such as to enable it to be readily inserted in the hollow or cavity 6 of the bottle-neck 2 in the course of manufacturing said bottle before the fillet 3 has been applied to the neck; but after said fillet has been so applied the dimensions of said body portion 7 are such that it cannot be withdrawn from the bottle through the contracted mouth 4, its side portions, as clearly shown in Fig. 2, engaging under the shoulder or projection 5 when such withdrawal is attempted.

The enlarged head 10 of the detector-stem 9 is adapted to fit within a bore or hollow 11 formed in the under side of the cork 12, with which the bottle is to be sealed, said bore or hollow being of a diameter to loosely receive said head. When the cork 12 is compressed to enable its ready insertion in the bottle-mouth 4, the sides of said bore or hollow 11 will be pressed into close engagement with the grooved or corrugated surface of the head 10, as clearly shown in the drawings, so that (as will be apparent) when the cork is in the bottle the detector will be held, as shown in Fig. 1, in position in the neck of the bottle

in clear view of the purchaser to indicate the genuineness of the bottle contents as an original package.

To permit of holding the detector in place in the bottle-neck with its headed end projecting in position to enter the hollow or bore 11 of the cork 12, as shown in Fig. 3, I provide the stem 9 thereof with an annular enlargement or projection 13, adapted to be engaged by a fork-like tool 14. (Shown in detail in Fig. 4.) The tool 14 being applied over the stem beneath said projection 13, the detector may be held suspended in the bottle-neck, as shown in Fig. 3, until the bottle shall have been filled and the cork properly applied and compressed so as to hold the detector, after which the tool will be removed and the cork forced home. The detector-stem 9 is also provided at a point just beneath the head 10 with a weakened portion 15, of less diameter than the main portion of the stem and so arranged as to be inclosed within the hollow or bore 11 of the cork 12, so as not to be liable to be broken off accidentally in the shipment or handling of the goods, and, if desired, said stem may be provided with a similar weakened portion, as indicated in dotted lines at x, at its point of connection with the detector-body 7.

In removing the cork 12 from the bottle the corkscrew is usually inserted at the center of the cork and its tip will be engaged with the corrugated or grooved surface of the head 10 of the stem 9, embedded in said cork, so that when the inserted corkscrew is pulled to withdraw the cork the stem 9 will be fractured at its weakened point 15, (or at the point x in case such weakened point is provided,) as shown in Fig. 2, so as to allow the detector to fall back into the bottle and sink to the bottom thereof to indicate that the bottle (as an original package) has been opened. As it is impossible to withdraw the detector from the bottle without fracture of the parts or to again attach the stem 9 to the cork 12, it is evident that the device constructed as above set forth forms an efficient means for guarding against the purchase of spurious goods; but the device is also of such a nature as to interfere in no way with the free use of the bottle as a container for goods of another class.

From the above description it will be seen that the device constructed according to my invention is of an extremely simple and inexpensive nature and is especially well adapted for use, and it will also be obvious that the device is susceptible of some modification without material departure from the principles and spirit of the invention, and for this reason I do not wish to be understood as limiting myself to the precise form and arrangement of the several parts herein set forth.

Having thus described my invention, what I claim, and desire to secure by Letters Patent, is—

1. The combination of a bottle having a neck provided with a contracted mouth, a detector having a body of greater dimensions than and incapable of removal through said mouth and provided with a fragile stem having a corrugated upper part and provided with a weakened part below said corrugated part, and a cork adapted for insertion in the bottle-mouth and having a hollow to receive the corrugated and weakened parts of the stem, the sides of said hollow being pressed, when the cork is in the bottle-mouth, into close engagement with the corrugated end of the stem to hold the detector in place, substantially as set forth.

2. The combination of a bottle having its neck provided with a contracted mouth and a detector having a body of greater dimensions than and incapable of removal through said mouth and provided with a fragile stem the upper end of which is adapted to be held in the bottle-stopper and is provided with an enlargement adapted to stand beneath the said stopper, substantially as set forth.

In testimony whereof I affix my signature in presence of two witnesses.

JOHN L. KENDRICK.

Witnesses:
JOHN ELIAS JONES,
JOHN L. VATTIER.