Oct. 16, 1951 M. DONIAK 2,571,426

ROTATABLE ELECTRICALLY HEATED DRYING CYLINDER

Filed Jan. 24, 1950 2 Sheets-Sheet 1

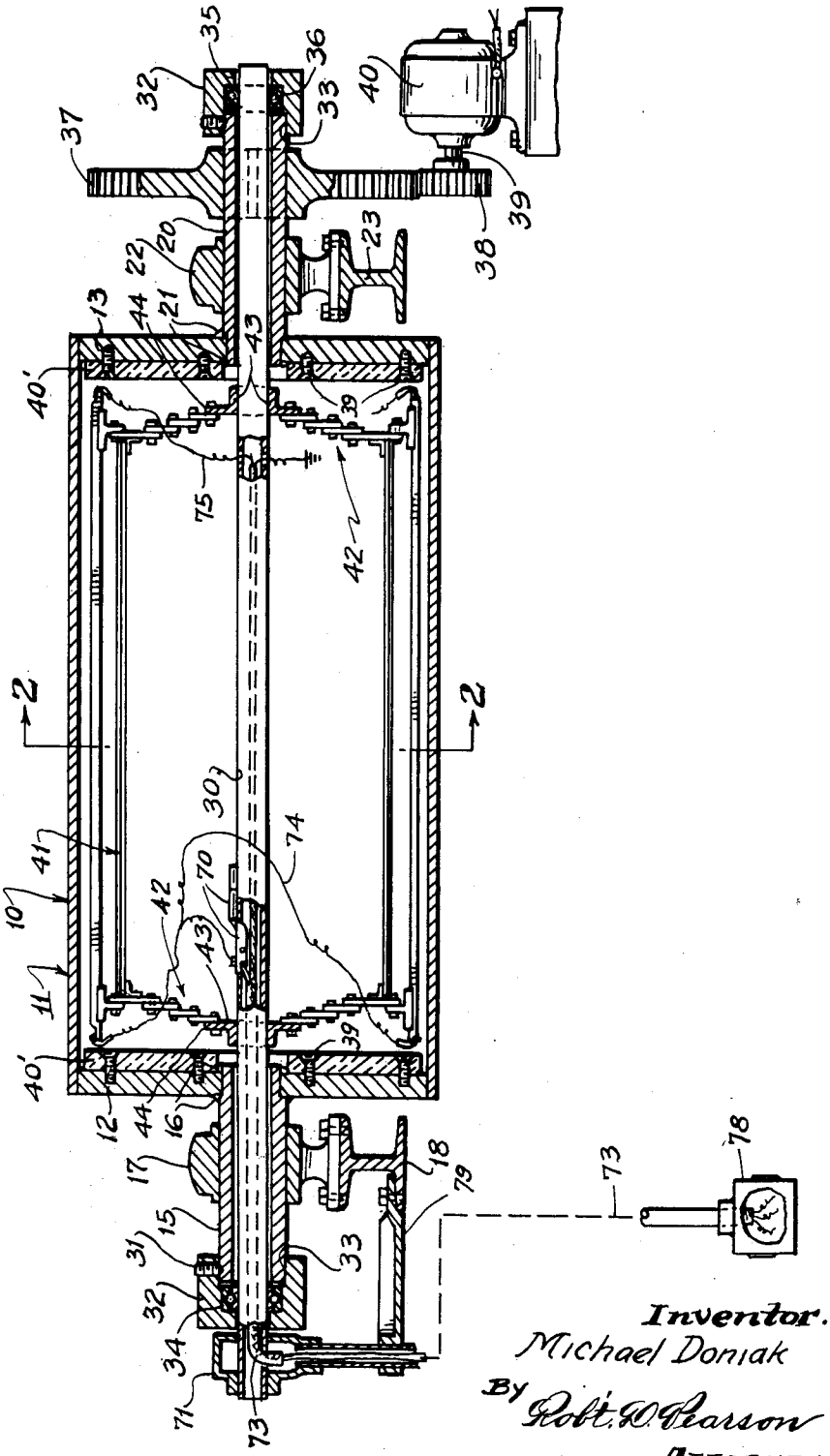

Fig. 1.

Inventor.
Michael Doniak
By Robt. O. Pearson
Attorney.

Oct. 16, 1951 M. DONIAK 2,571,426

ROTATABLE ELECTRICALLY HEATED DRYING CYLINDER

Filed Jan. 24, 1950 2 Sheets-Sheet 2

Fig. 5.

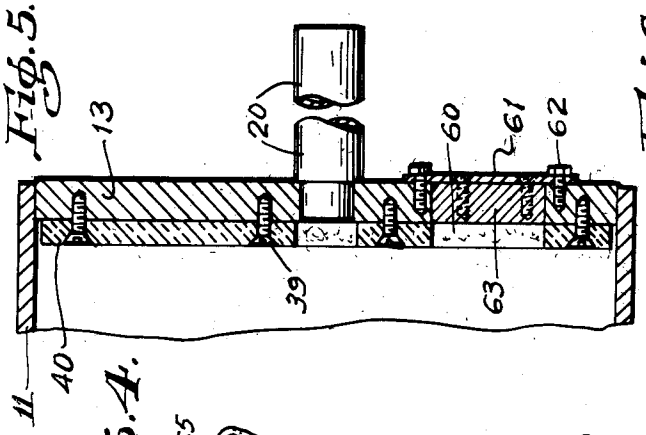

Fig. 6.

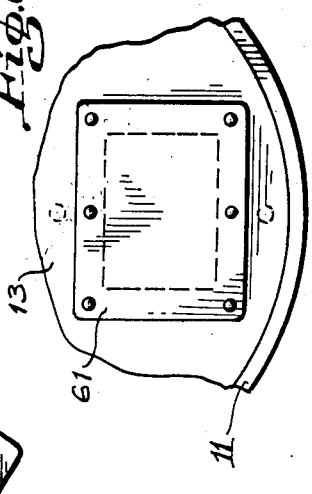

Fig. 4.

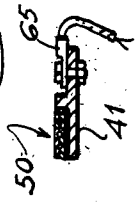

Fig. 3.

Fig. 2.

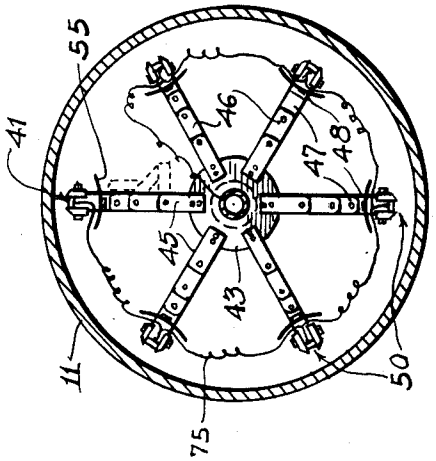

Inventor:
Michael Doniak
By Robt. O. Pearson
Attorney.

Patented Oct. 16, 1951

2,571,426

UNITED STATES PATENT OFFICE

2,571,426

ROTATABLE ELECTRICALLY HEATED DRYING CYLINDER

Michael Doniak, Compton, Calif.

Application January 24, 1950, Serial No. 140,205

4 Claims. (Cl. 219—19)

1

This invention relates to a rotatable electrically heated drying cylinder.

More specifically speaking the invention pertains to a rotatable drying cylinder which is provided internally with electric heating means mounted upon a support about which the cylinder is rotatable, or is mechanically revolved.

Heaters of this type are particularly useful in paper mills in which freshly manufactured moist sheets of paper are passed over a series of such rotating cylinders for the purpose of evaporating the water from the sheets so that they leave the last drying cylinder in a properly dried, marketable condition.

Among the objects of the present invention are; to provide improved means for regulating the amount of electrically generated heat continuously supplied to the drying cylinder during the rotation thereof; to provide a more stable and satisfactory mounting means for electric heating equipment supported within the cylinder in a stationary manner during the rotation of the latter; and, more specifically speaking to provide adjustable means for accurately regulating the space between the wall of the cylinder and a plurality of electric heat generating members mounted upon a stationary support within the cylinder.

Other objects, advantages and features of invention will hereinafter appear.

Referring to the accompanying drawings, which illustrate a preferred embodiment of the invention, which is now being used to dry sheet material,

Fig. 1 is a longitudinal midsection of the complete apparatus.

Fig. 2 is a cross section on line 2—2 of Fig. 1.

Fig. 3 is a greatly enlarged reproduction of certain parts shown in the upper portion of Fig. 2, said parts being shown differently positioned in the former view than in the latter.

Fig. 4 is a sectional detail of one of the electrical connections.

Fig. 5 is an enlarged diametrical section of one of the end portions of the rotatable drying drum or cylinder, showing the manhole therein.

Fig. 6 is a fragmentary elevation looking from right to left at the structure shown in the lower part of Fig. 5.

Referring in detail to the drawings, and first to the general assembly shown in Fig. 1, the cylindrical metal shell 10 has one of its end portions externally fitted around and secured to a circular head 12 and its opposite end portion in a similar surrounding, secured relation to a twin

2

head 13, said heads each being considerably thicker than the wall portion 11 of the drum.

The head 12 is centrally apertured to have tightly fitted into it one diametrically reduced end portion of a sleeve shaft 15 which projects axially from the exterior side of said head, to which it is secured by welds 16. Said sleeve shaft 15 is rotatably supported by a pillow block 17 which is bolted to the upper side of a horizontal I-beam 18.

At the opposite end of the structure shown in Fig. 1 the same structure is duplicated by a sleeve shaft 20, welds 21, pillow block 22 and I-beam 23 to which said pillow block 22 is bolted.

A tubular, nonrotatable electric conduit 30 extends axially through the cylindrical member 10 and projects from both ends thereof. The external diameter of said conduit is slightly less than the interior diameter of the aforementioned twin sleeve shafts 15 and 20, and each end portion of said conduit has secured to it, by a set screw 31, a circular housing 32 having in one end portion a circular, central recess 33, the outer part of which fits around the adjacent sleeve shaft (15 or 20) and the opposite end portion of which contains a roller bearing structure 34 in a surrounding supporting relation to the conduit 30. Each of said housings 32 has a central, circular opening 35 through its outer end of slightly greater diameter than the exterior diameter of the conduit 30, thus enabling the workman conveniently to assemble the bearings 34 and adjacent structures. Said opening 35, being of less diameter than the recess 33 within which the bearing is fitted, provides an annular shoulder 36 which keeps said bearing in place in the assembled structure.

By the arrangement which has just been described a slight internal annular clearance is provided between the sleeve shafts 15 and 20 and the portions of the conduit 30 which they surround. This provides for rotating said sleeve shafts and the cylinder 10 without rotationally disturbing said conduit 30, which is done by means of a large gear 37 splined to the shaft 20 and driven by a pinion gear 38 carried by the shaft 39 of a motor 40.

The rotatable cylinder 10 will now be described in further detail, together with the structure contained therewithin.

To the inner face of each cylinder end wall (12 or 13) is secured by screws 39, or otherwise, a heat-insulating asbestos disk 40'. The space within the cylinder 10 is also occupied by a radially adjustable skeletal framework 41, each end

portion of which includes a spider 42 with a central hub 43 having a radial flange 44 around its inner end. This spider is shown in Fig. 2 having six jointed arms which radiate from said hub 43, each of said arms consisting of a plurality of short links or bars designated in outward succession 45, 46, 47 and 48. The inner bar 45 of each of said spider arms is non-swingably secured to the flange 44 of the spider 43 by a plurality of bolts 49, and bolts 50a, 51 and 52 are located progressively outward in the linkage structure which is being described, the latter three bolts connecting with overlapping link ends and being provided with suitable nuts which are screwed down to maintain, in the desired angular relations to each other, the bars or links which they connect.

The outer link or bar 48 of each arm of each of the two spider structures shown has attached to its outer end one end portion of an elongated conventional electric heating member 50, the six heating members shown thus being supported in a circumferentially spaced apart relation to each other and positioned to direct electrically produced heat against all parts of the side wall 11 of the cylinder 10.

The outer links 48 are sufficiently thick to have bolts 51 passed through them in a width-wise manner and these bolts are utilized to clamp a pair of jaws 52 against the heating members 50 so that said members, while abutting flatwise against the outer ends of the links 48, are securely gripped in an edgewise manner between said pairs of jaws. Opposite edges of the outer end portions of each outer link 48 are shown slightly recessed at 53, thus providing seats to receive the jaws 52, said seats aiding to keep the jaws properly positioned when clamped down.

A series of reflector strips 55 are mounted upon the outer links 48 in inwardly adjacent relation to the heating members 50 to reflect against the cylinder wall 11 the heat generated by said members 50. These reflector strips are shown attached by short bolts 56 to angular brackets 57 which are, in turn, riveted or bolted to the links 48. Said reflector strips are transversely curved or slightly arcuate, as shown, with their concave surfaces directed toward the members 50 so as more efficiently to reflect the heat against the wall 11 of the cylinder 10.

Adjustment of the heating members 50 circumferentially and toward and from the cylinder wall 11 is effected through a side range by varying the angular relation to each other of the central links or bars 46 and 47, which form an elbow in the already mentioned linkage of each arm of each spider 42. This is done by loosening the nuts on the bolts 50, 51 and 52 to allow said arms 46 and 47 to be swung to the desired angular relation and thereupon tightening said nuts. The cylinder 10 will be sufficiently large to admit workmen to perform this adjustment, a manhole 60, guarded by a door plate 61, being provided for this purpose. Said door plate is shown removably held in place by screws 62. It has secured to it a plate 63 dimensioned to fill said manhole 60.

In order to supply electric current to the six heating members 50, said members are connected in parallel at each end by connectors 65.

A combined thermometer and thermostatical control device is indicated at 70.

At the left hand end of the apparatus as it appears in Fig. 1 a housing 71 is shown mounted upon the end portion of the electric conduit 30, said

housing serving as an attaching means for a cable conduit for an electric cable or cord 73 which passes through an aperture provided for it in the lower side of said conduit 30 and thence is led through the latter conduit to the interior of the cylinder 10 and, by means of wires 74 and 75 completes the circuit through the already mentioned conductors 65 and the heating members with which they are connected. The specific wiring shown, separately considered, forms no part of the present invention and, therefore, need not be described in further detail. It may be varied according to the preference of the electrician. In Fig. 1 the cable conduit 73 is shown connected with an outlet box 78. The upper portion of this conduit is shown stabilized by a bracket 79 secured to the lower flange of the I-beam 18.

The electrically heated drying cylinder 10 shown in the drawings will be located within the frame of the machine in which it will be used. The right hand end portion of the sleeve shaft 20 (see Fig. 1), together with the gear 37 carried thereby should be located outside of said frame, so as conveniently to be driven by the motor 40, as shown.

The thick asbestos disks 40' which line the end walls of the cylinder 10, conserve the heat generated within said cylinder and cause it to be directed against the side rather than the ends of said cylinder. Also, owing to the high degree of heat sometimes required, said asbestos disks protect the bearings afforded by the pillow blocks 17 and 22.

I claim:

1. In a structure of the kind described, a rotatably mounted metallic cylinder, a conduit having an end portion projecting axially from at least one end of said cylinder, a framework mounted upon said conduit within said cylinder, said framework comprising a plurality of elongated electric heating members extending lengthwise of said cylinder and radially spaced away from said conduit, supporting means for said heating members carried by said conduit, said supporting means comprising arm structures extending radially from said conduit and longitudinally adjustable to maintain said heating members at various distances from the side wall of said cylinder, and means to supply electric heating current to said heating members, said current supply means including conductors led into said cylinder through said conduit.

2. In combination, a drying cylinder having centrally apertured end walls, a sleeve shaft attached to and projecting axially from each of said end walls, each of said sleeve shafts having within it a passage which communicates with the interior of said cylinder, bearing means underlying each of said sleeve shafts and rotatably supporting them together with the aforesaid cylinder to which they are attached, a non-rotatable conduit extending axially through said drum and sleeve shafts, two supports for the end portions of said conduit, said supports including between them said cylinder and said sleeve shafts, a spider within said cylinder adjacent to each of its end walls, said spider being mounted upon said conduit and having arm structures extending radially therefrom, each of said arm structures including an elbow structure consisting of an inner and an outer bar, pivot bolts securing the inner bars of said elbow structure to the spider arm structure of which they form a part, a pivot bolt securing to each other the two arms which

form said elbow structure, clamping nuts carried by all of said bolts to secure the arms of said elbow structure and in selected angular adjustment in relation to each other and in relation to the parts of the spider arms radially adjacent to them, thus to adjust fixedly both the radial and circumferential positions of the outer ends of the arms of each of the aforesaid spiders, electric heating means carried by the outer end portions of the arms of said spiders and bridging the space between the two spiders, and conductors leading from an outside source of electric current through the aforesaid conduit and thence to said electric heating means.

3. In an apparatus of the kind described, a rotatably mounted drying cylinder, non-rotatable means extending axially into said cylinder and affording a support therewithin, a framework carried by said support internally adjacent to each end wall of said cylinder, the two frameworks thus provided each including a plurality of arms which radiate from the axis of said cylinder, a plurality of elongated electric heat radiating members bridging the space between said frameworks and carried by the outer end portions of their said arms, said arms being longitudinally adjustable to vary the space between said heating members and the side wall of said cylinder, and electrical conductor means positioned to conduct electrical current into said cylinder and thence to said heating members, the individual arms of each of said frameworks including a pair of bars which form an elbow structure the angularity of which is adjustable to vary the length of the arm of which it forms a part.

4. In a structure of the kind described, a metallic cylinder having its axis extending horizontally, nonrotatable means extending axially through said cylinder and rotatably supporting the latter, a spider within said cylinder adjacent to each of its end walls, said spider being mounted upon said conduit and having arm structures extending radially therefrom, each of said arm structures including an elbow structure consisting of an inner and an outer bar, pivot bolts securing the inner bars of said elbow structure to the spider arm structure of which they form a part, a pivot bolt securing to each other the two arms which form said elbow structure, clamping nuts carried by all of said bolts to secure the arms of said elbow structure and in selected angular adjustment in relation to each other and in relation to the parts of the spider arms radially adjacent to them, thus to adjust fixedly both the radial and circumferential positions of the outer ends of the arms of each of the aforesaid spiders, electric heating means carried by the outer end portions of the arms of said spiders and bridging the space between the two spiders, and conductors leading from an outside source of electric current through the aforesaid conduit and thence to said electric heating means.

MICHAEL DONIAK.

REFERENCES CITED

The following references are of record in the file of this patent:

UNITED STATES PATENTS

Number	Name	Date
923,224	Welch	June 1, 1909
963,942	Richardson	July 12, 1910
1,037,573	Allen	Sept. 3, 1912
1,571,282	Leculier	Feb. 2, 1926
1,978,081	Hanson	Oct. 23, 1934
2,260,803	Dewar	Oct. 28, 1941
2,474,759	Schmitz	June 28, 1949

FOREIGN PATENTS

Number	Country	Date
123,149	Switzerland	Nov. 1, 1927
309,291	Great Britain	Apr. 11, 1929