US00RE41662E

(19) **United States**
(12) **Reissued Patent**
Schomaker et al.

(10) **Patent Number: US RE41,662 E**
(45) **Date of Reissued Patent: Sep. 14, 2010**

(54) **INPUT POWER CONNECTOR FOR DISTRIBUTION PANEL**

(75) Inventors: **David E. Schomaker**, Lino Lakes, MN (US); **Tuan Ngo**, Maple Grove, MN (US); **Carlos Cabrera**, Ciudad Juarez (MX)

(73) Assignee: **ADC Telecommunications, Inc.**, Eden Prairie, MN (US)

(21) Appl. No.: **11/583,876**

(22) Filed: **Oct. 18, 2006**

Related U.S. Patent Documents

Reissue of:
(64) Patent No.: **6,806,420**
Issued: **Oct. 19, 2004**
Appl. No.: **09/971,083**
Filed: **Oct. 3, 2001**

(51) **Int. Cl.**
H02G 3/08 (2006.01)

(52) **U.S. Cl.** ..... **174/50**; 174/53; 174/17 VA; 220/3.2; 361/683

(58) **Field of Classification Search** ..... 174/50, 174/17 VA, 53, 60, 135, 66; 220/3.2, 3.3, 220/4.02, 241; 361/683, 686, 641, 650; 439/709, 439/716
See application file for complete search history.

(56) **References Cited**

U.S. PATENT DOCUMENTS

4,867,696	A	* 9/1989	Demler et al.	439/212
5,943,220	A	8/1999	Shikata et al.	
5,989,073	A	* 11/1999	Kahoun	439/709
5,994,989	A	* 11/1999	Rowe et al.	335/202
6,038,126	A	3/2000	Weng	
6,081,419	A	6/2000	Pham	
6,315,580	B1	* 11/2001	Hurtubise et al.	439/82
6,381,122	B2	* 4/2002	Wagener	361/611
6,515,227	B1	2/2003	Massey et al.	
6,548,753	B1	4/2003	Blackmon, Jr. et al.	
6,566,600	B1	5/2003	Ford et al.	

FOREIGN PATENT DOCUMENTS

EP 0 735 810 A2 10/1996

OTHER PUBLICATIONS

International Preliminary Examination Report.
"PowerWorx™ Traditional GMT Series Power Distribution Panel User Manual", *ADC Telecommunications, Inc.,* ADCP–80–520, Issue 1, pp. 1–33 (Dec. 1999).
"PowerWorx™ Power Distribution Products", *ADC Telecommunications, Inc.,* 6 pages (Aug. 2000).
"PowerWorx™ Select Series™ Fuse Platform", *ADC Telecommunications, Inc.,* 8 pages (Aug. 2000).
"Telpower® DC Power Protection Systems. Telpower® Compact Fused Disconnect Switch TPC & TPCDS", *Cooper Bussmann,* Form No. TPCDS, 2 pages (Sep. 24, 2000).
"PowerWorx® SuperPower™ GMT Series", *ADC Telecommunications, Inc.,* 8 pages (Jan. 2001).
"PowerWorx® Traditional GMT Series", *ADC Telecommunications, Inc.,* 8 pages (Jan. 2001).
"PowerWorx® Uninterrupted Power GMT Series", *ADC Telecommunications, Inc.,* 8 pages (Jan. 2001).
Telect, Inc., High Current Power Distribution Alarm Panel Users Manual, Issue A, Rev 1, 46 pages (1999).
Telect, Inc., power distribution panel, 17 photographs.
International Preliminary Examination Report (PCT/US02/25122).*

* cited by examiner

Primary Examiner—Dhiru R Patel
(74) *Attorney, Agent, or Firm*—Merchant & Gould P.C.

(57) **ABSTRACT**

The present invention relates to power input housings and assemblies for power distribution panels. The power input assemblies provide separate cavities with a centerwall for the power input cables to be led into and a cover closing the cavities. The cavities allow power cables to enter through either a top open end or a bottom open end and the cover is adapted to close the other open end when installed. Alternatively, the housing can be oriented with the open ends of the cavities to the sides, permitting cables to enter through either side and the cover closing the other side.

38 Claims, 36 Drawing Sheets

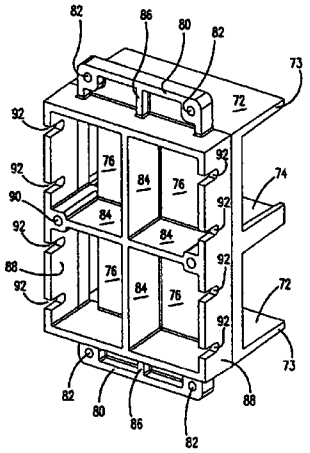

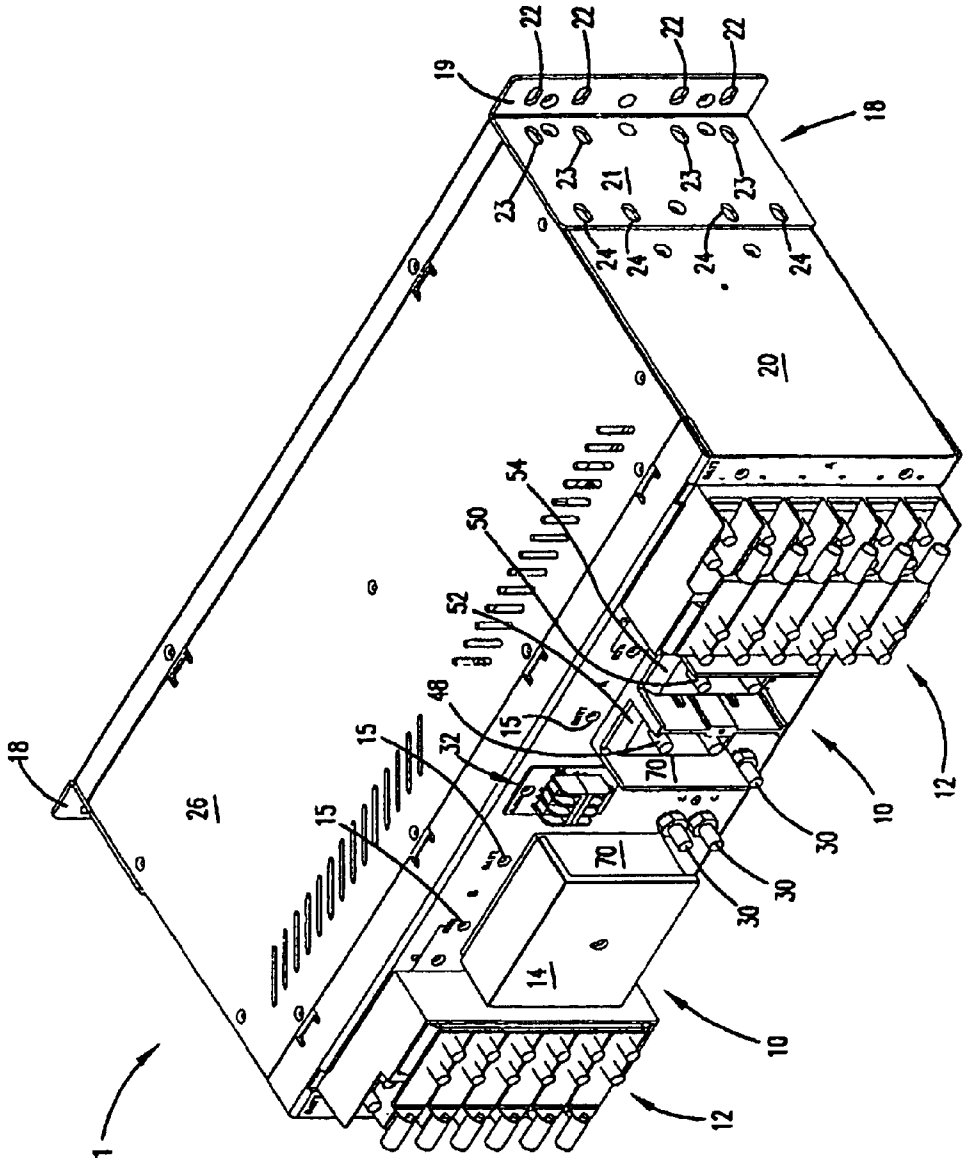

FIG. 1

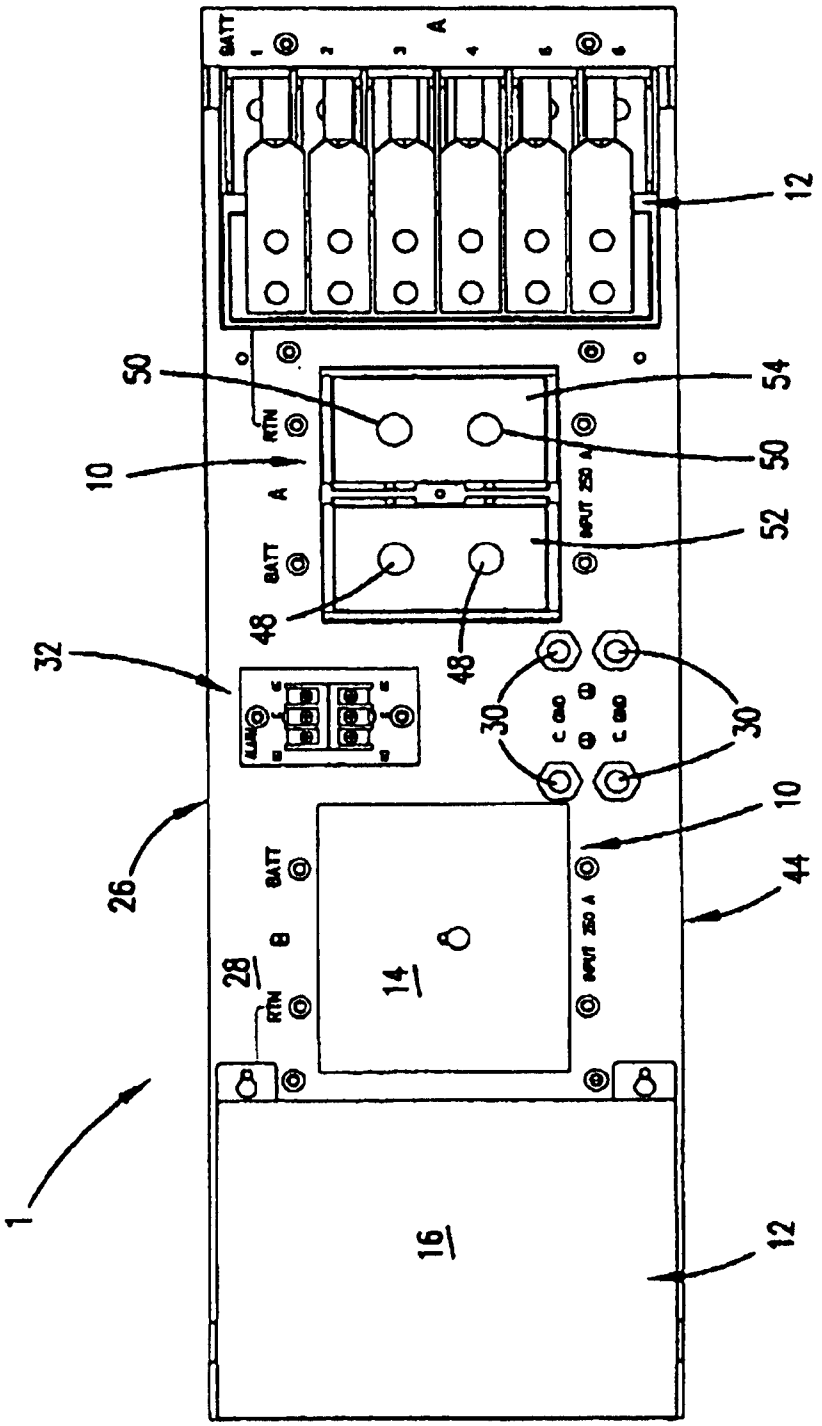
BATT
A
RTN
BATT
A
INPUT 250 A
BATT
B
RTN
INPUT 250 A
C GND
C GND
ALARM
1
10
12
14
16
26
28
30
32
44
48
50
52
54

FIG. 2

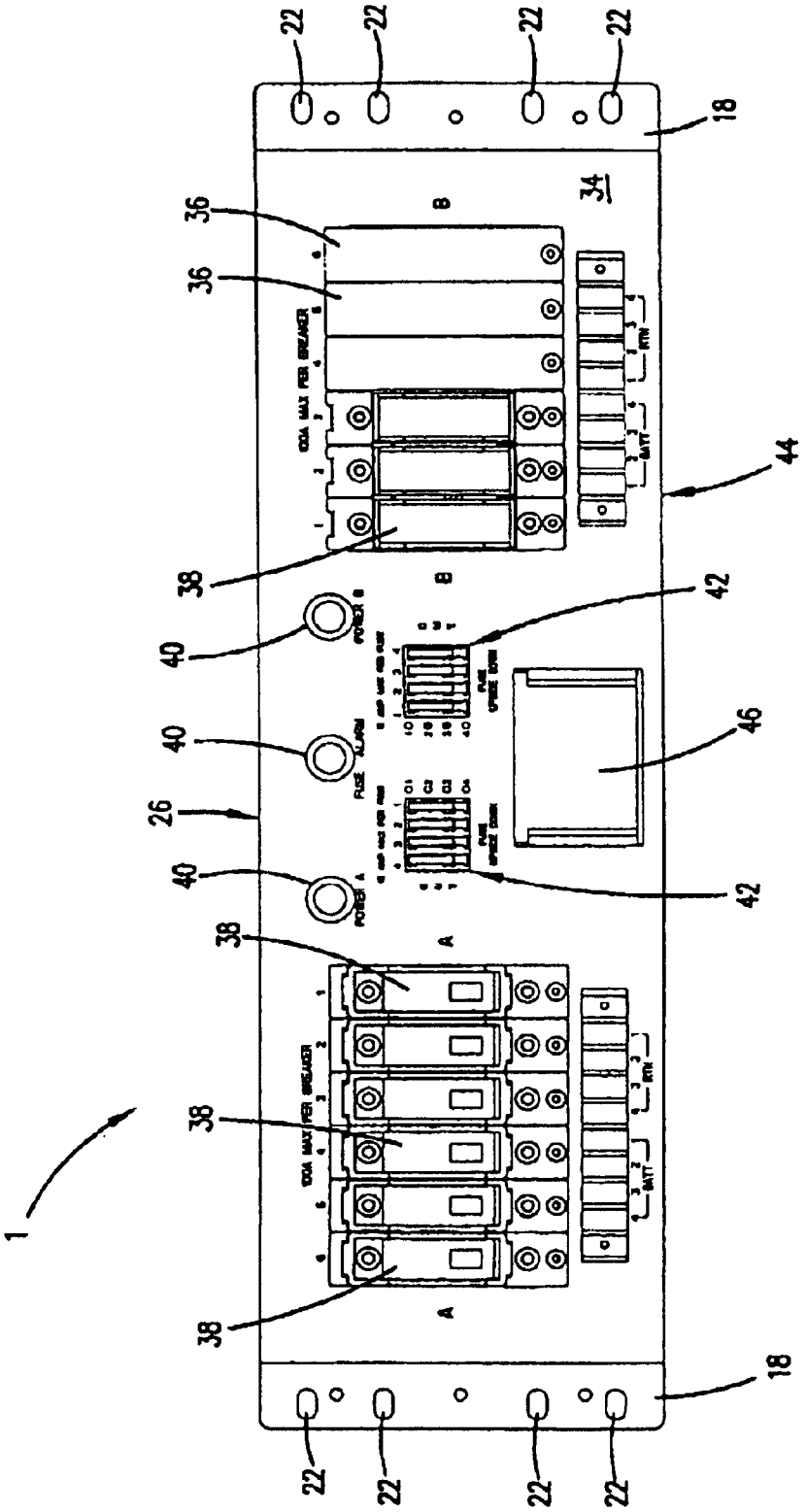
22
22
22
22
18
34
36
36
B
B
44
38
40
42
46
40
26
40
42
38
A
38
38
A
18
22
22
22
22
1

FIG. 3

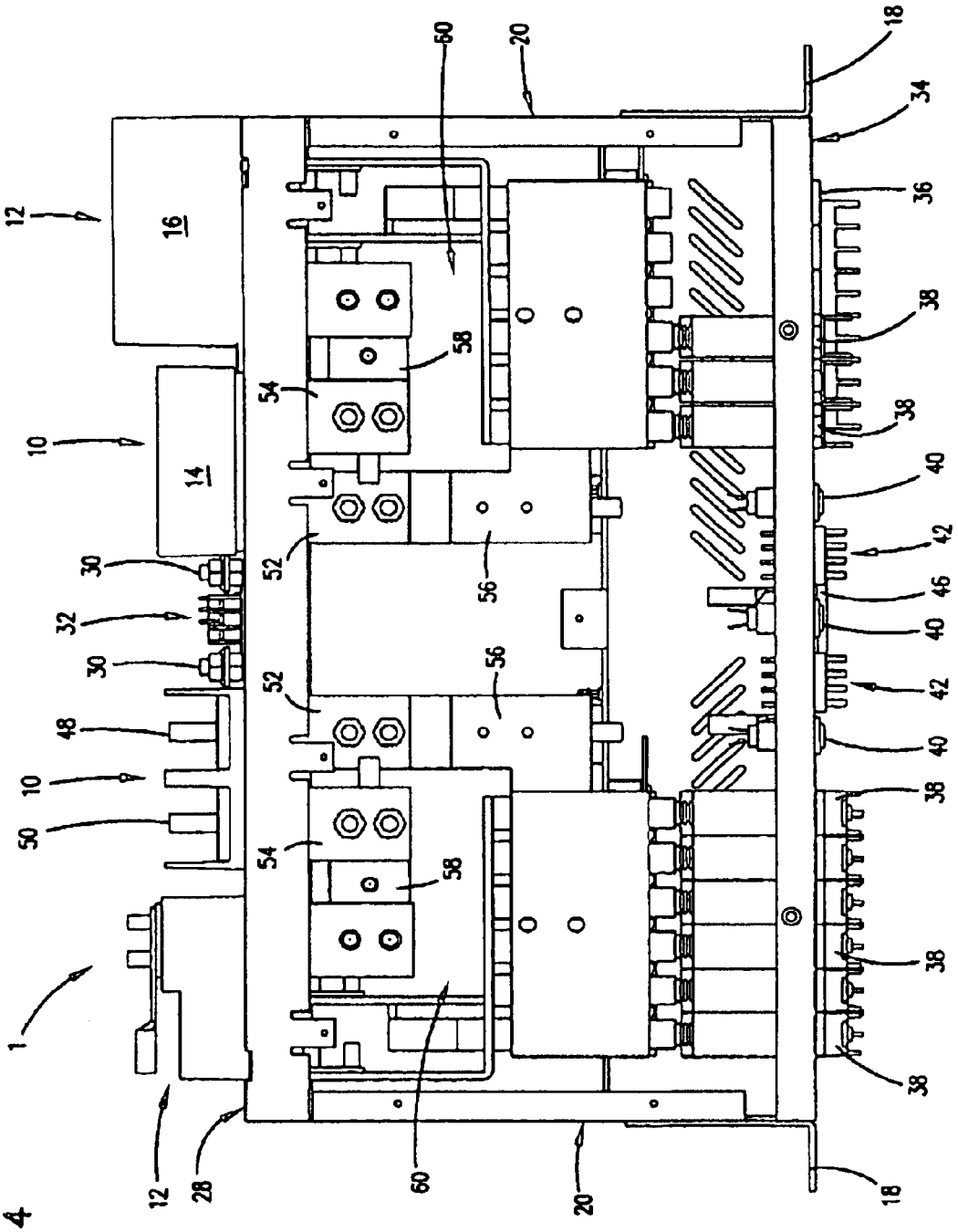

FIG. 4

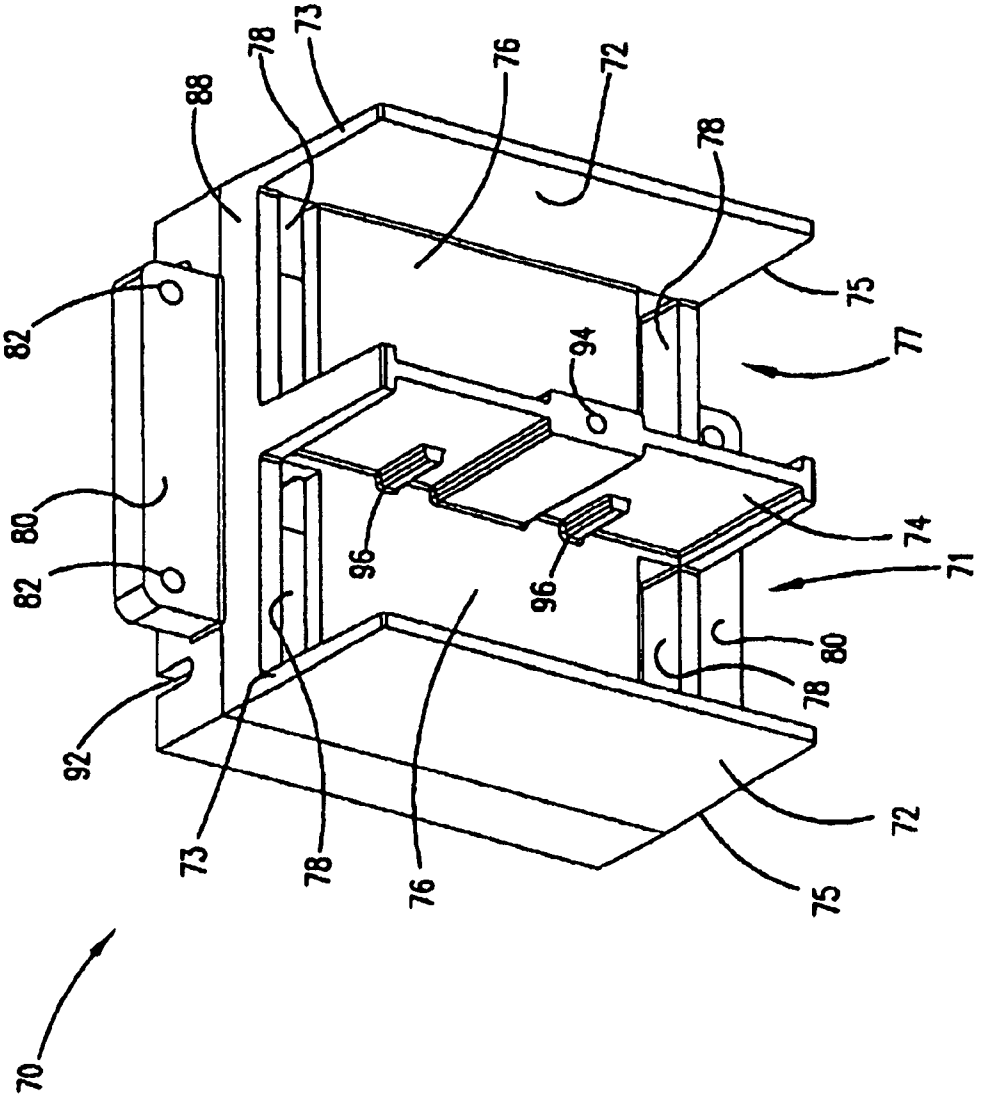
70
92
82
80
82
88
73
78
73
78
76
76
72
78
75
77
94
96
96
74
71
80
78
72
75

FIG. 5

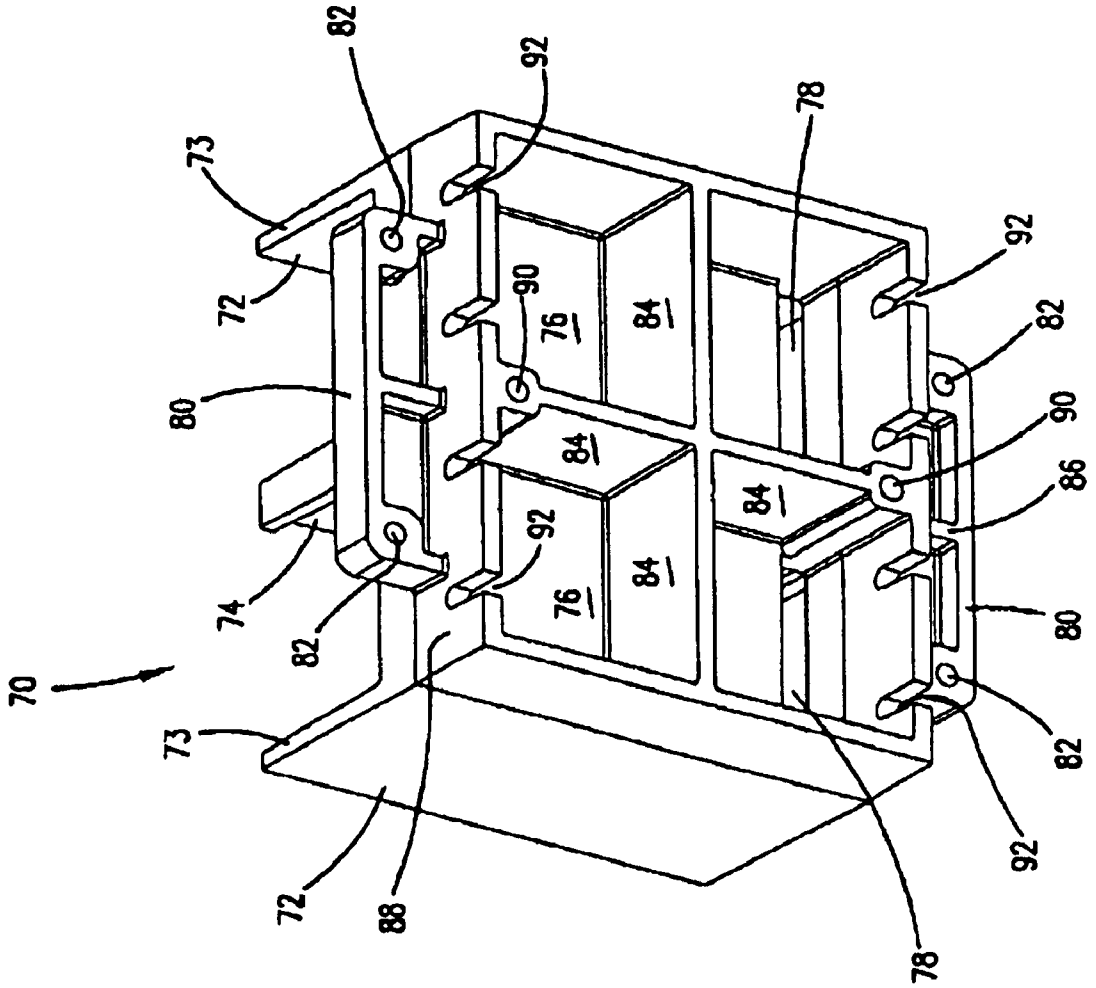

FIG. 6

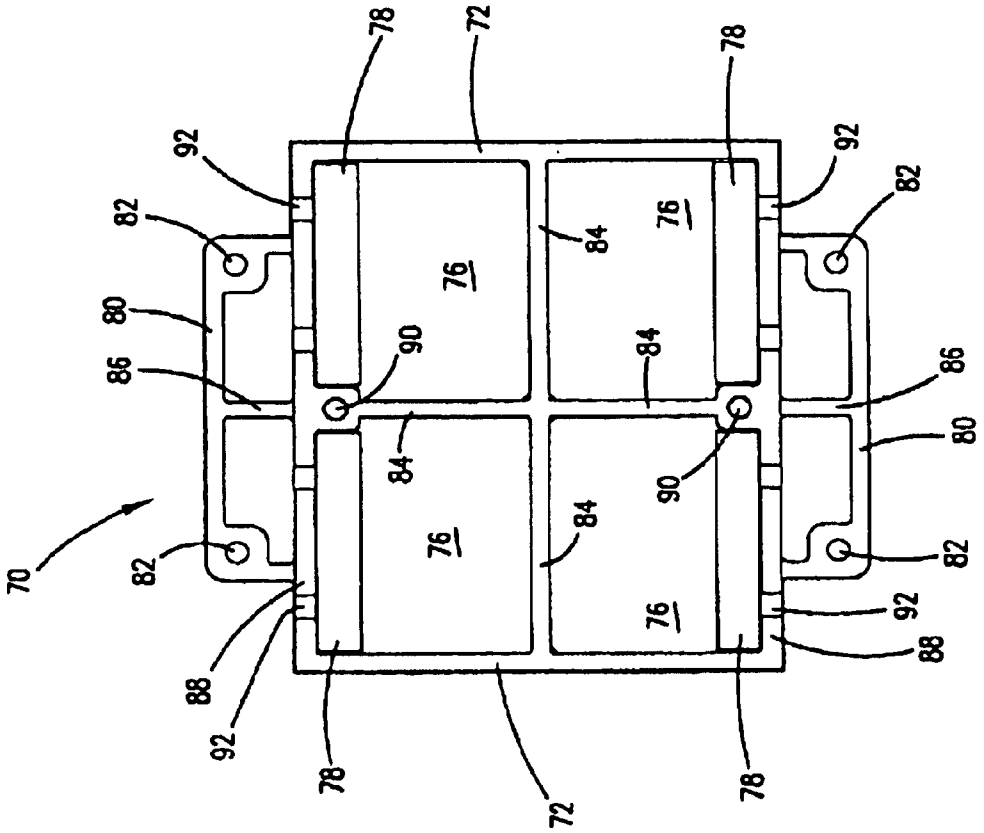
70
72
72
76
76
76
76
78
78
78
78
80
80
82
82
82
82
84
84
84
84
86
86
88
88
90
90
92
92
92
92

FIG. 7

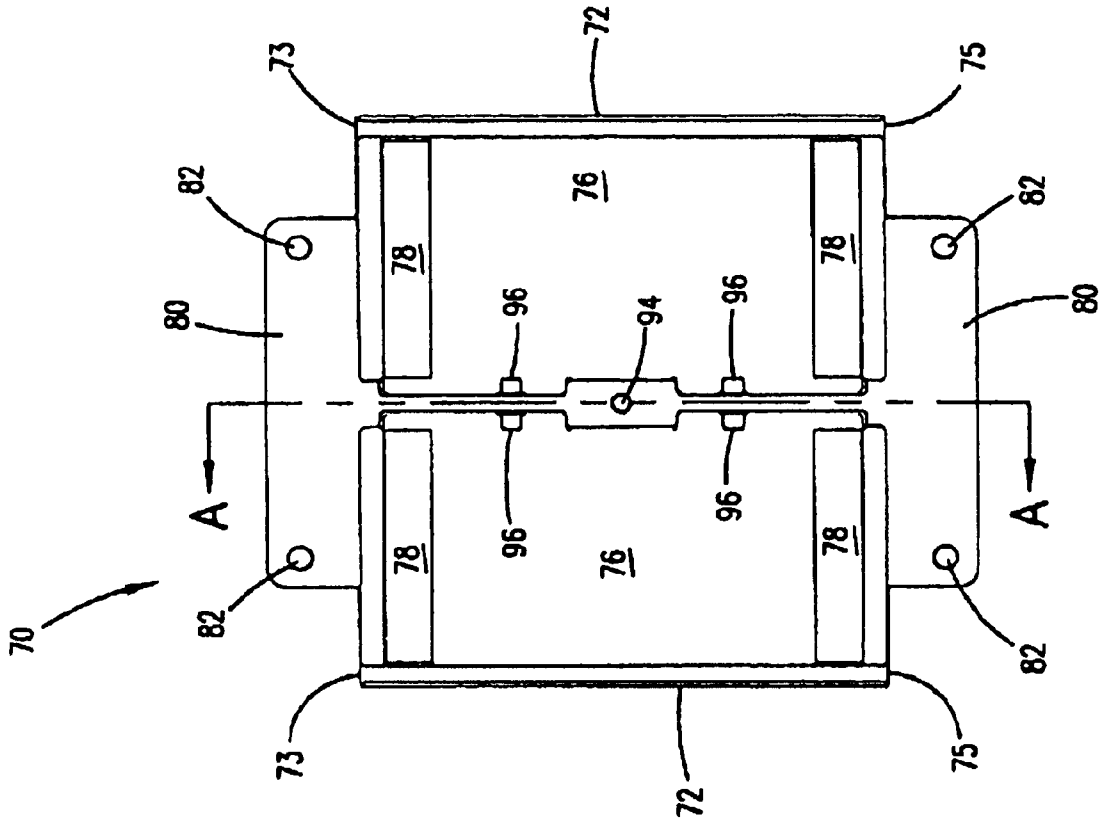

FIG. 8

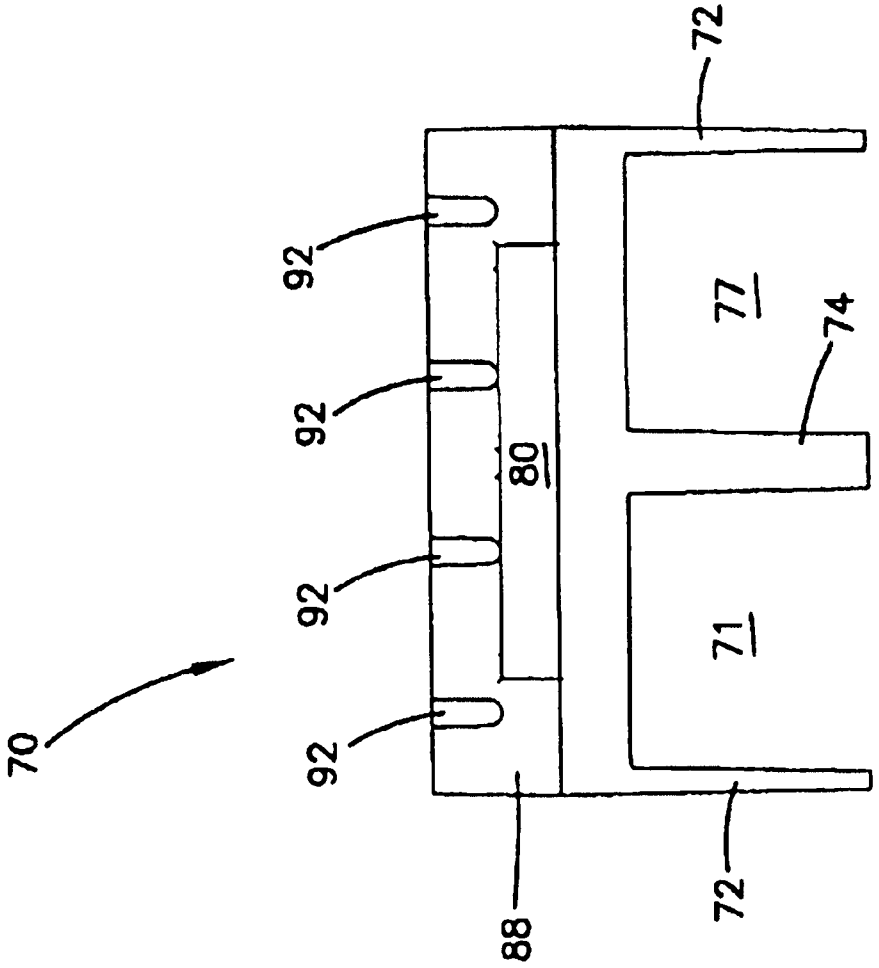

FIG. 9

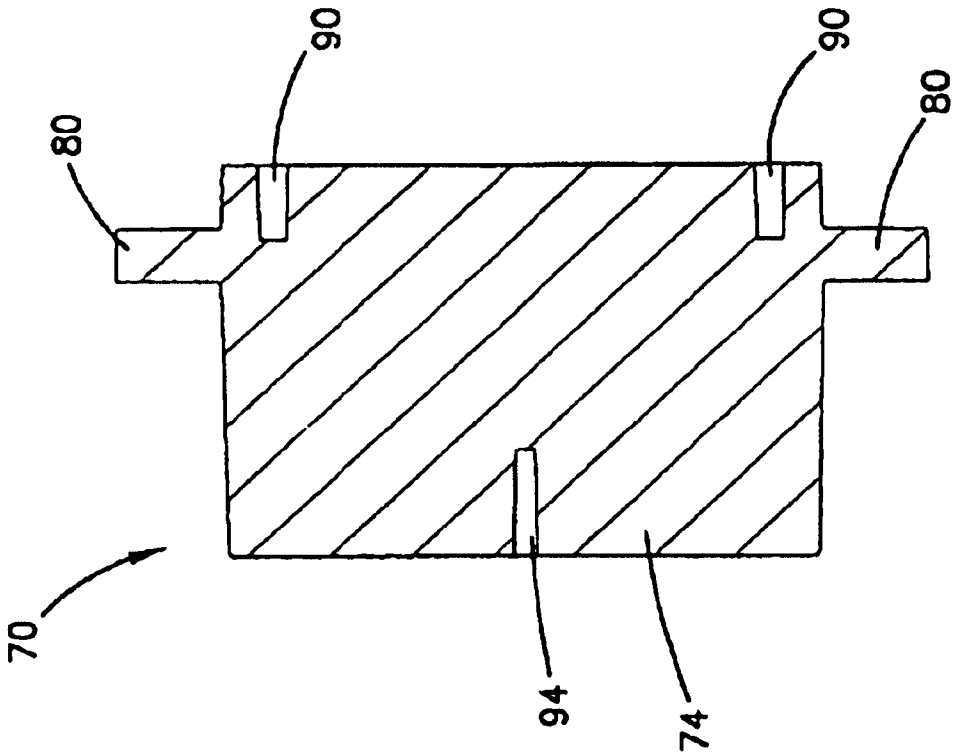

FIG. 10

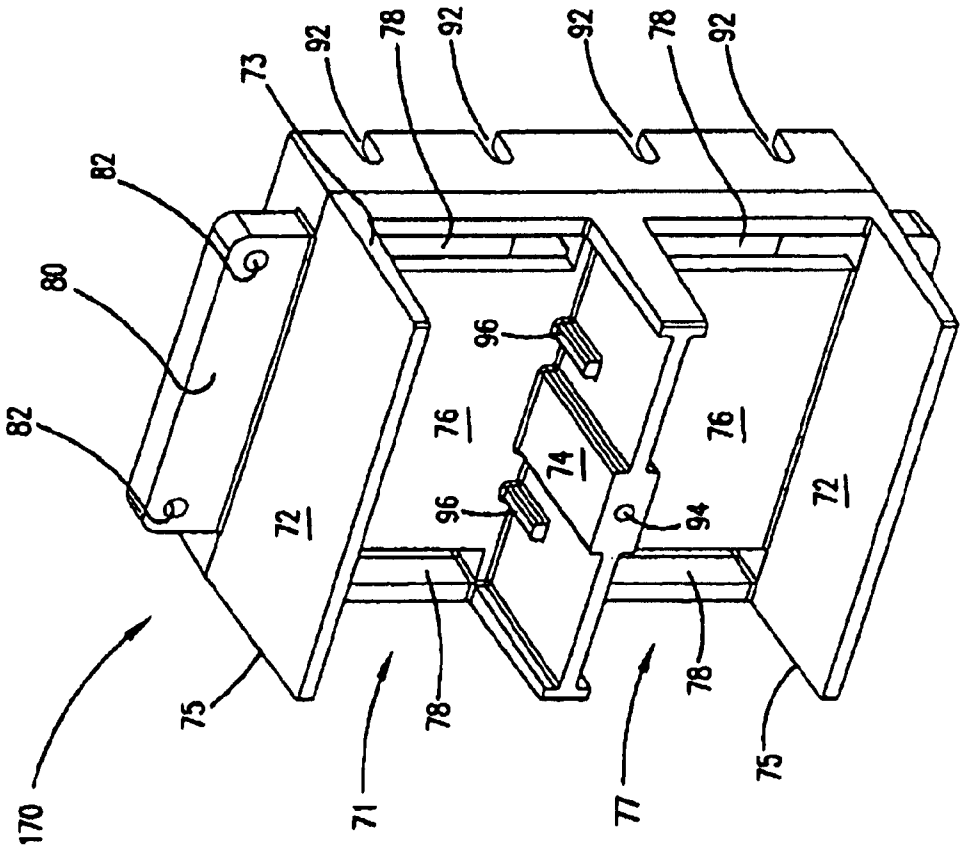
170
82
82
80
75
72
73
92
78
92
92
78
92
71
78
76
96
74
96
94
77
78
76
72
75

FIG. 11

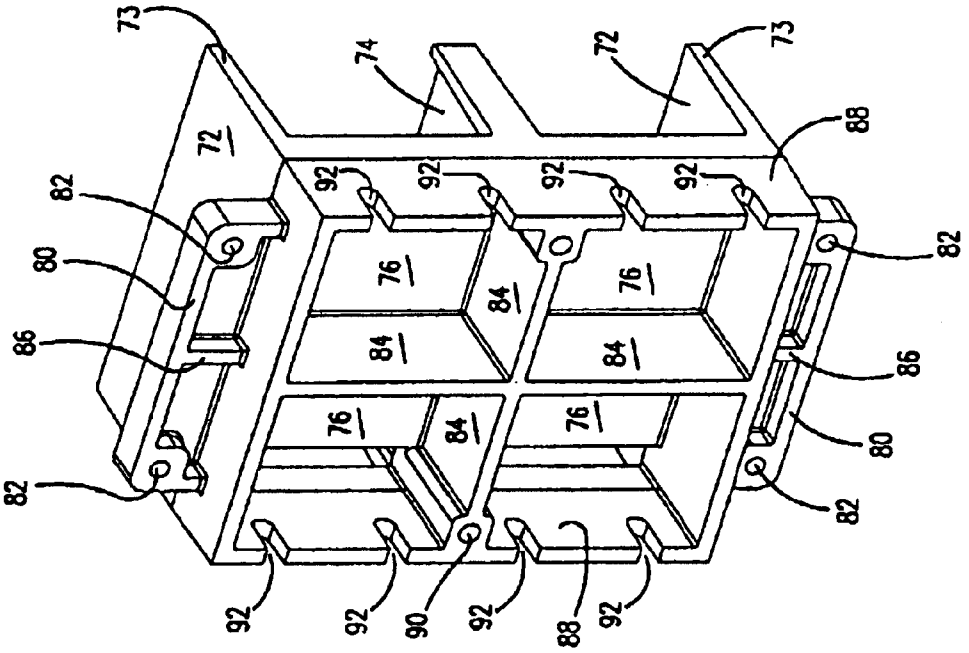
73
72
82
80
86
82
92
92
90
92
88
92
74
72
73
88
92
92
92
92
76
84
76
84
84
76
84
76
82
86
80
82

FIG. 12

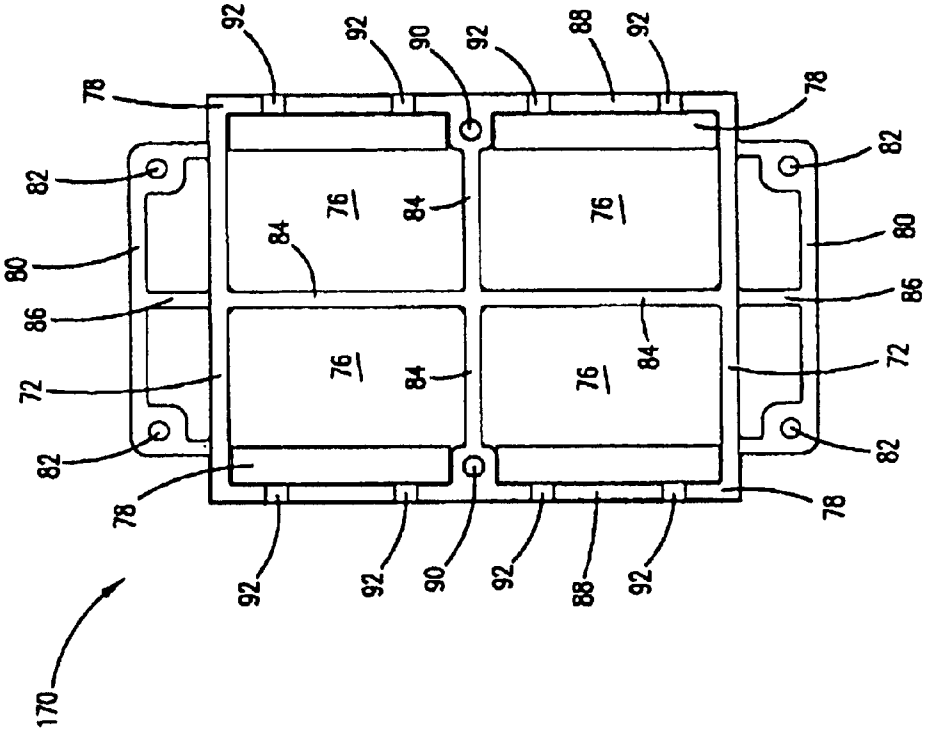

FIG. 13

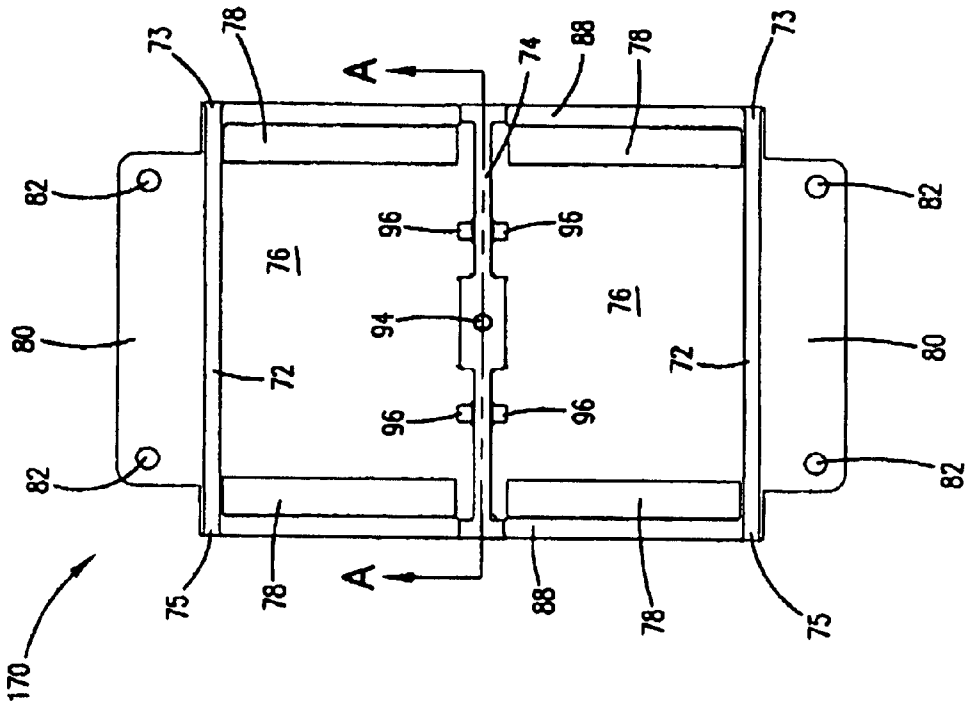
170
82
82
80
75
73
78
A
A
76
72
96
96
94
96
96
76
72
74
88
78
88
78
75
73
82
82
80

FIG. 14

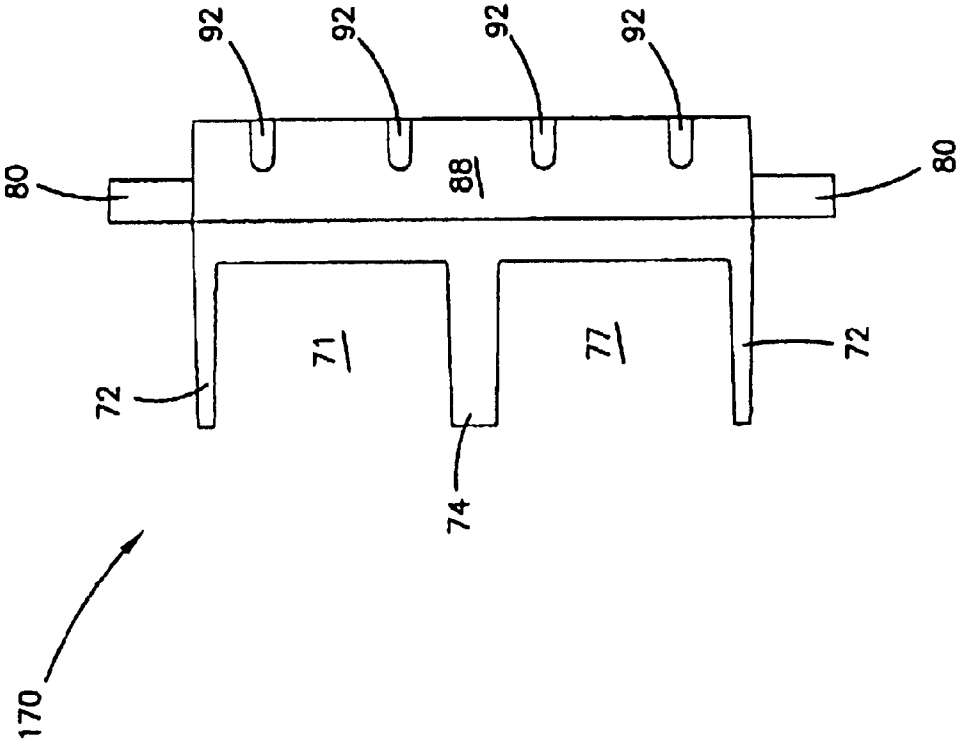

FIG. 15

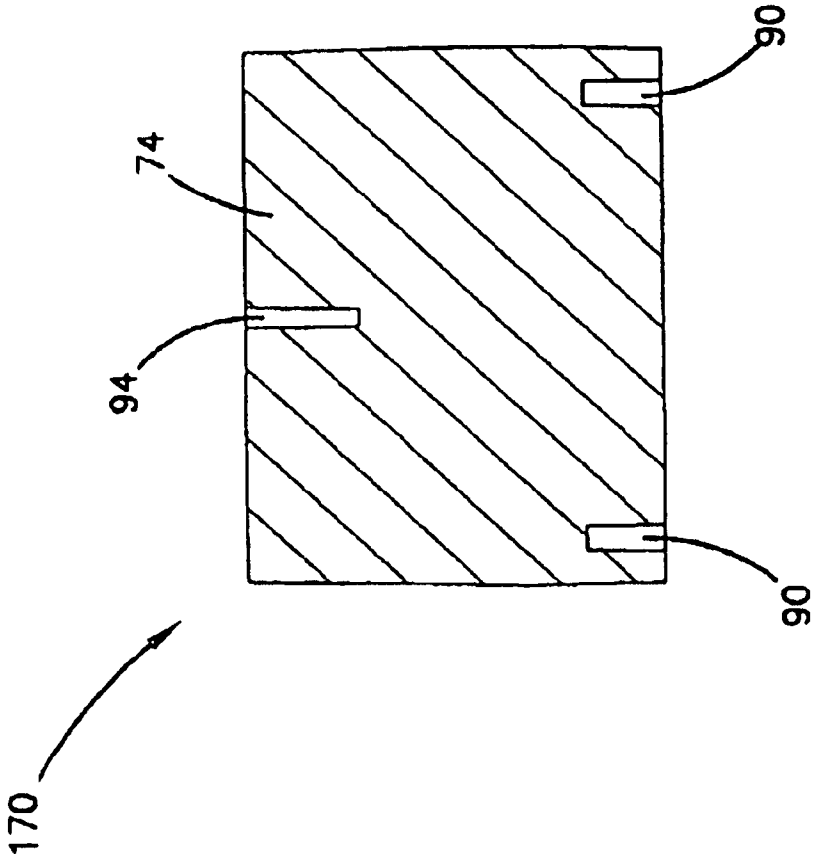

FIG. 16

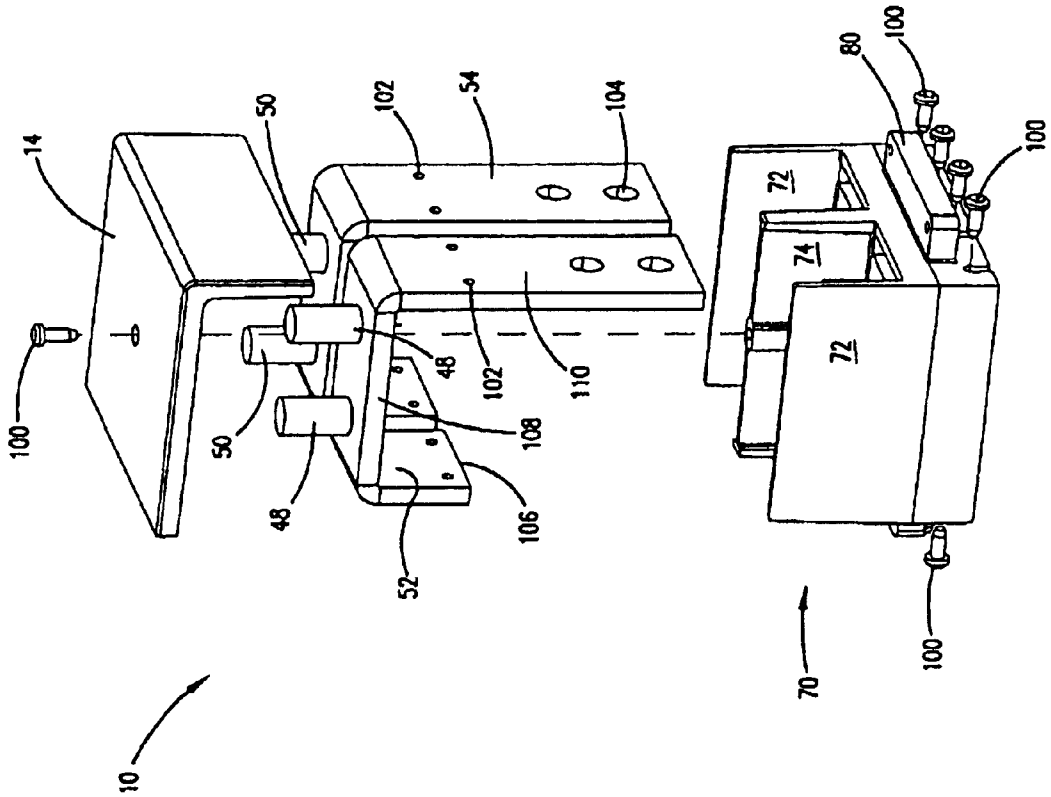

FIG. 17

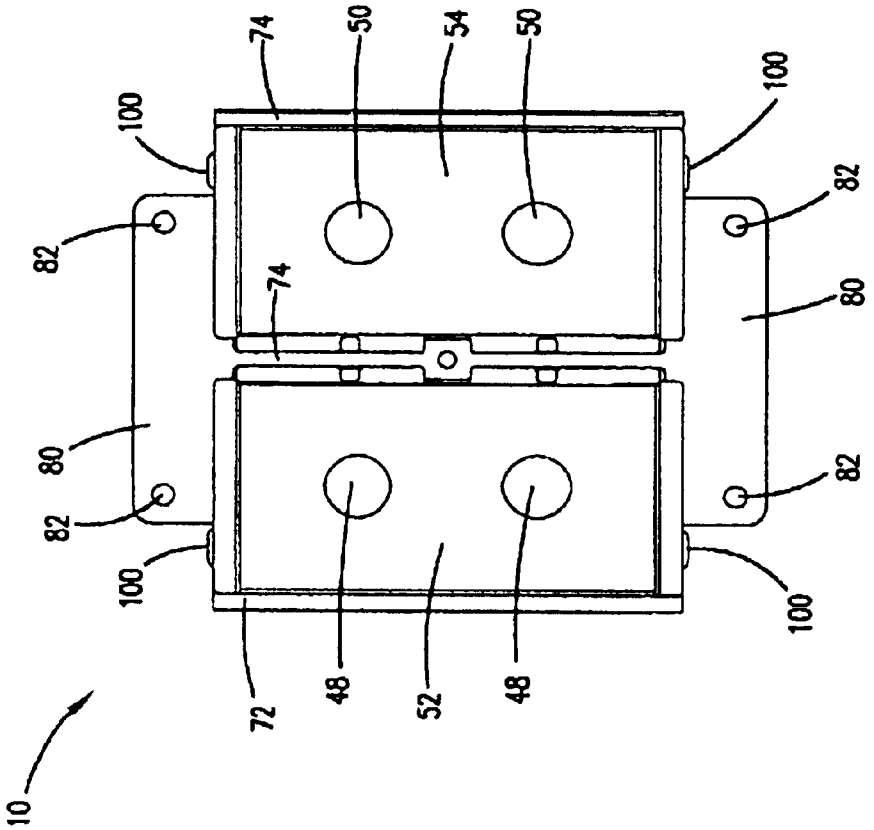

FIG. 18

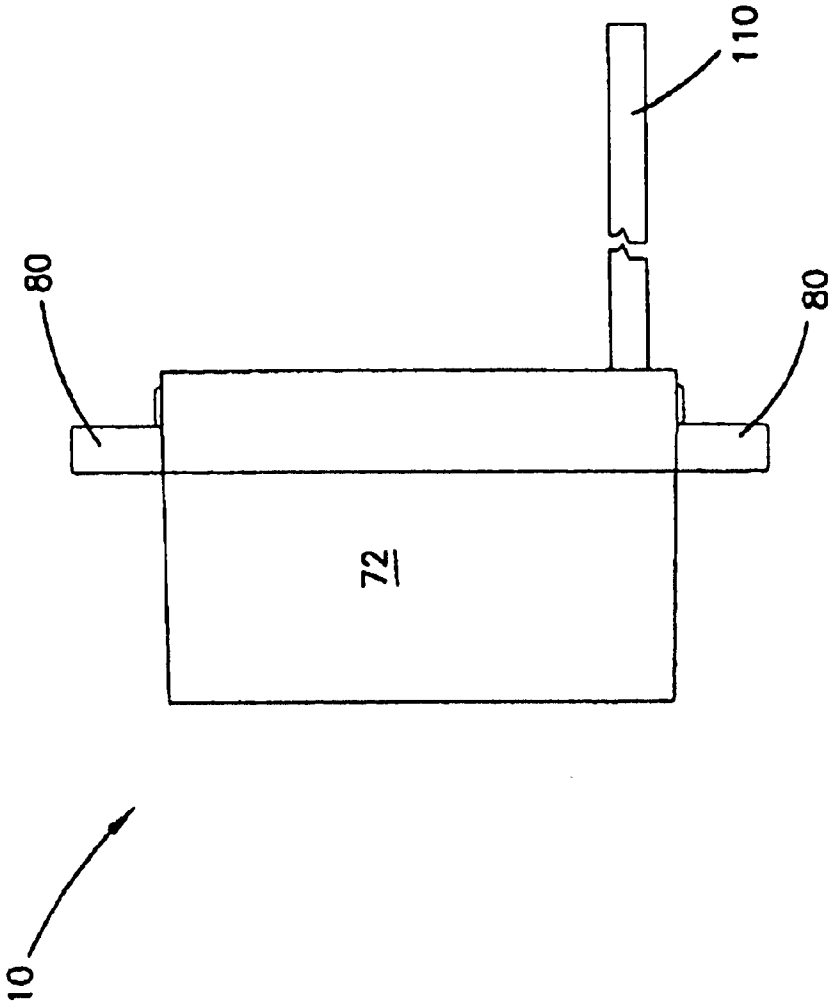

FIG. 19

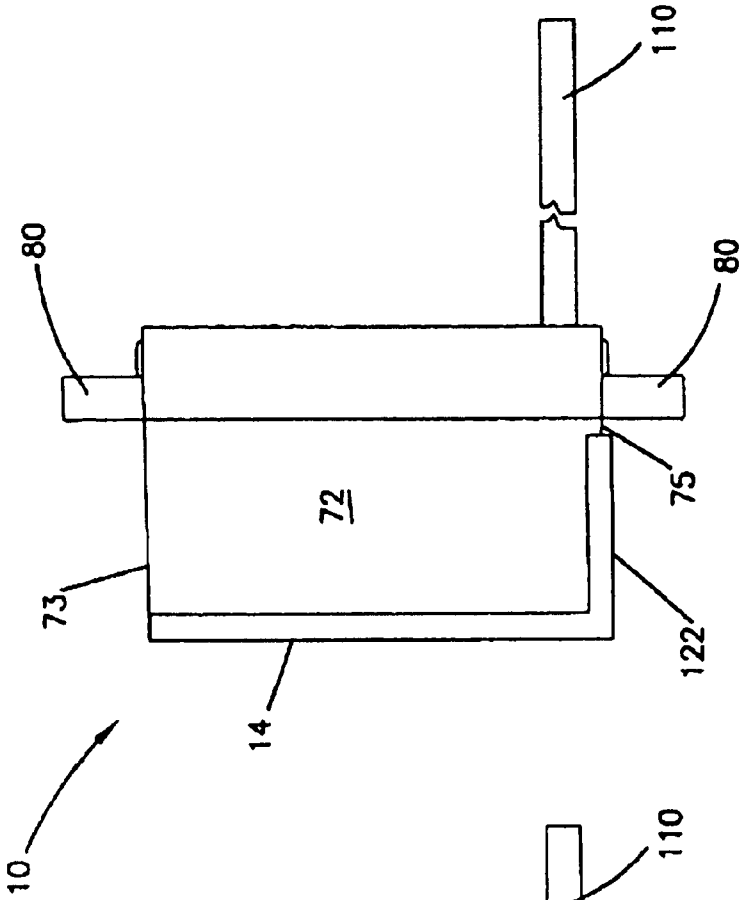

FIG. 19B

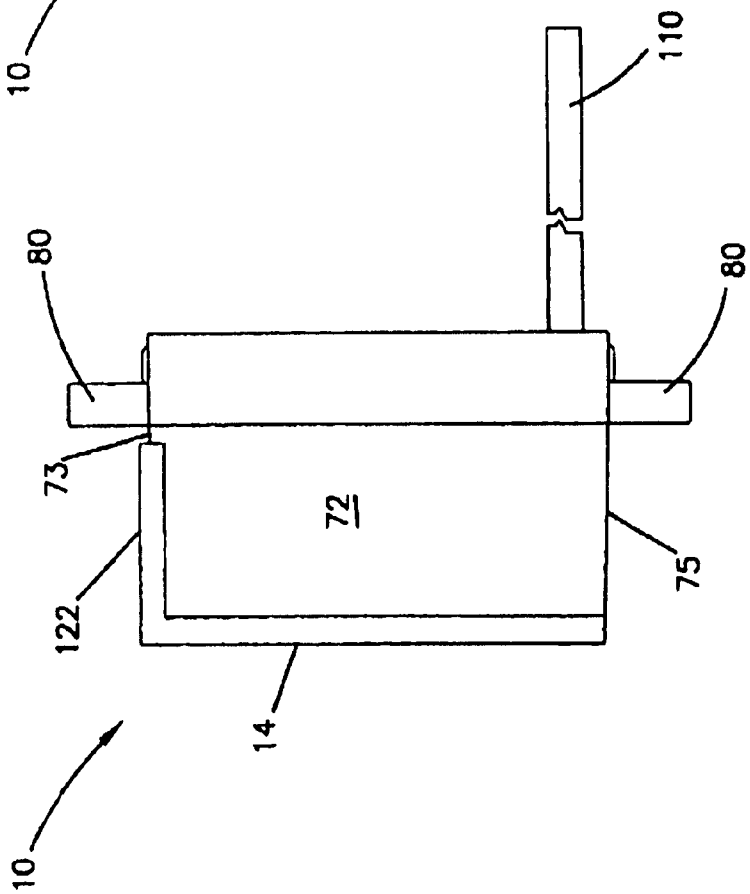

FIG. 19A

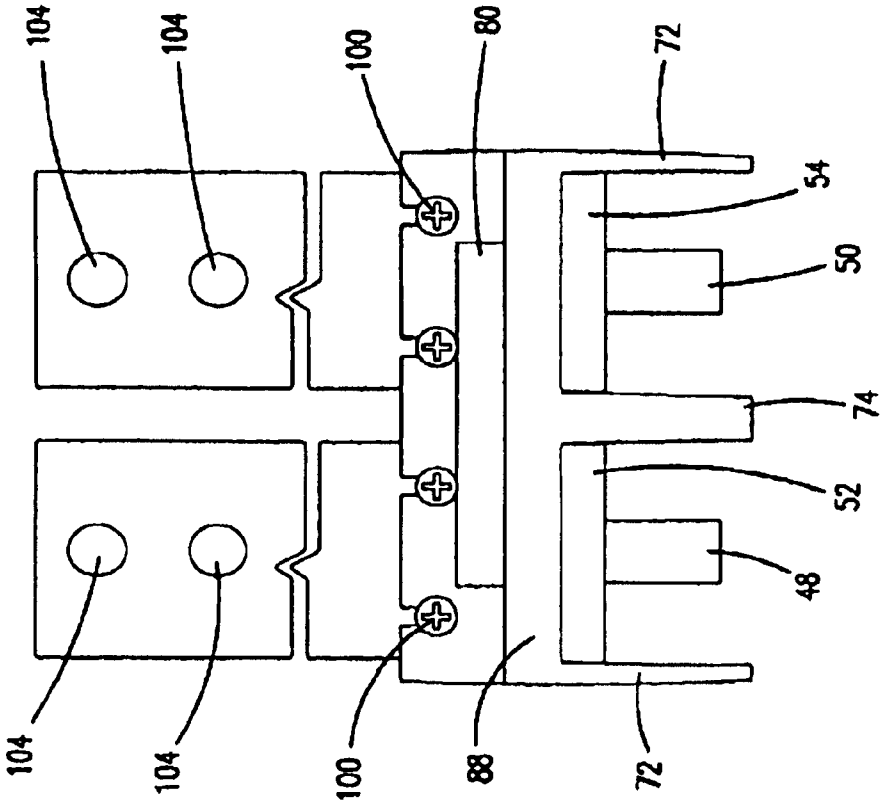

FIG. 20

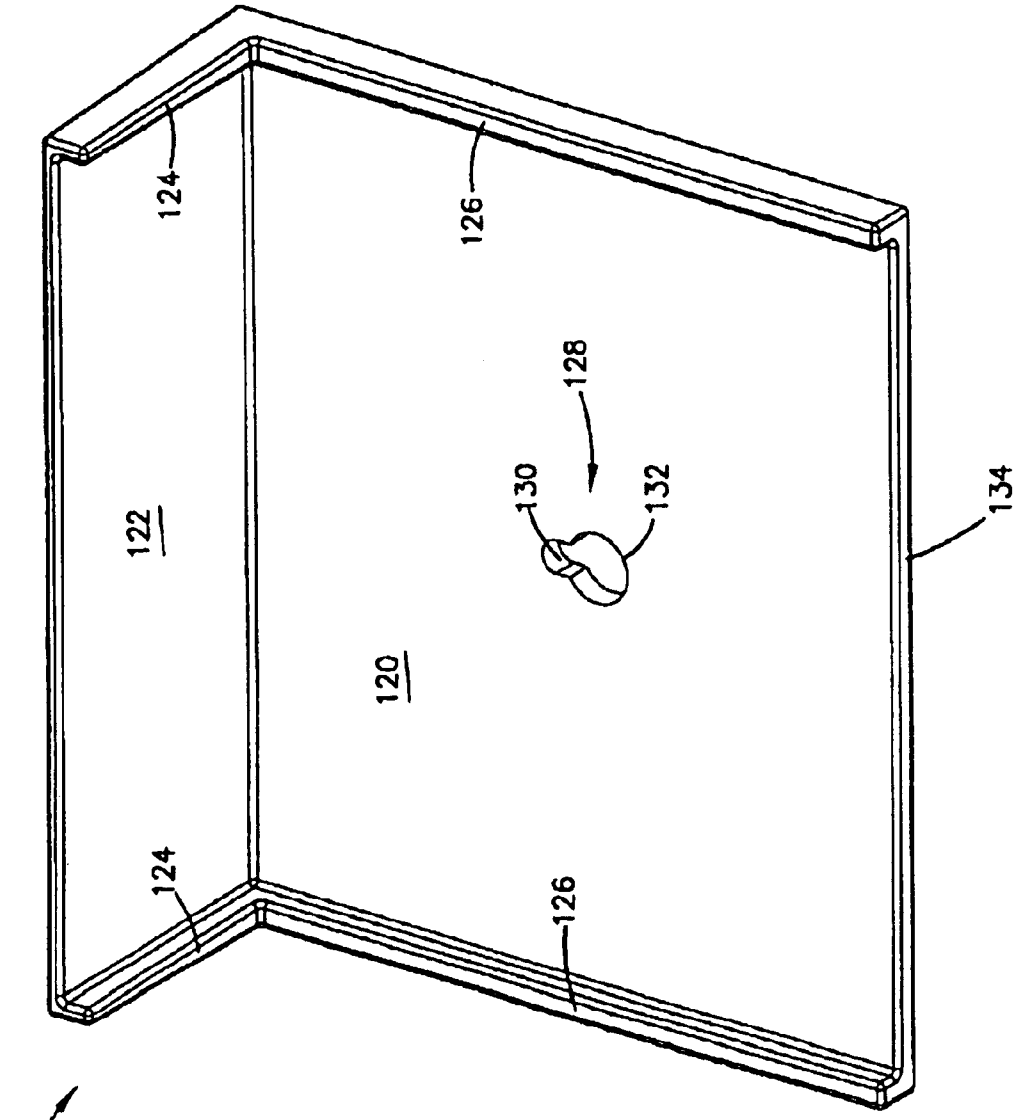

FIG. 21

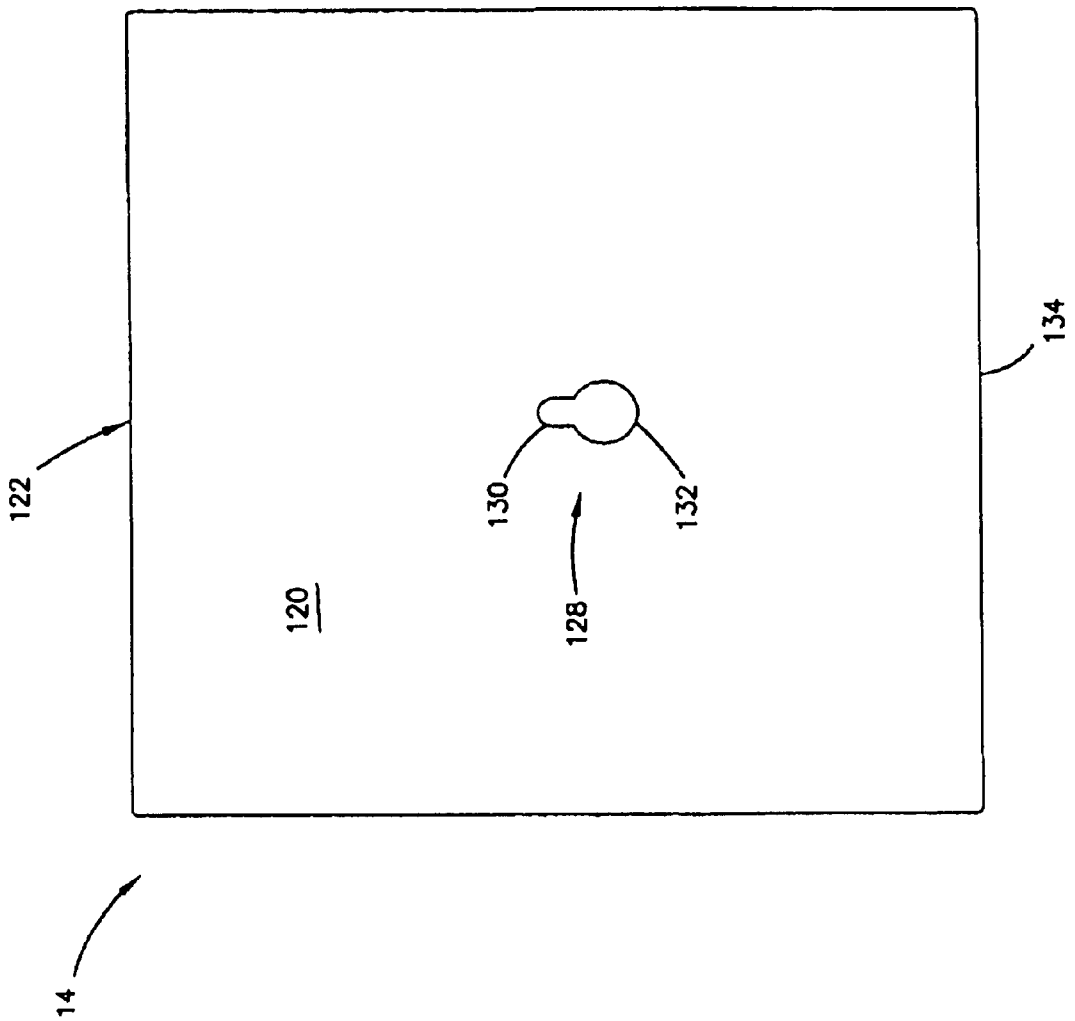

FIG. 22

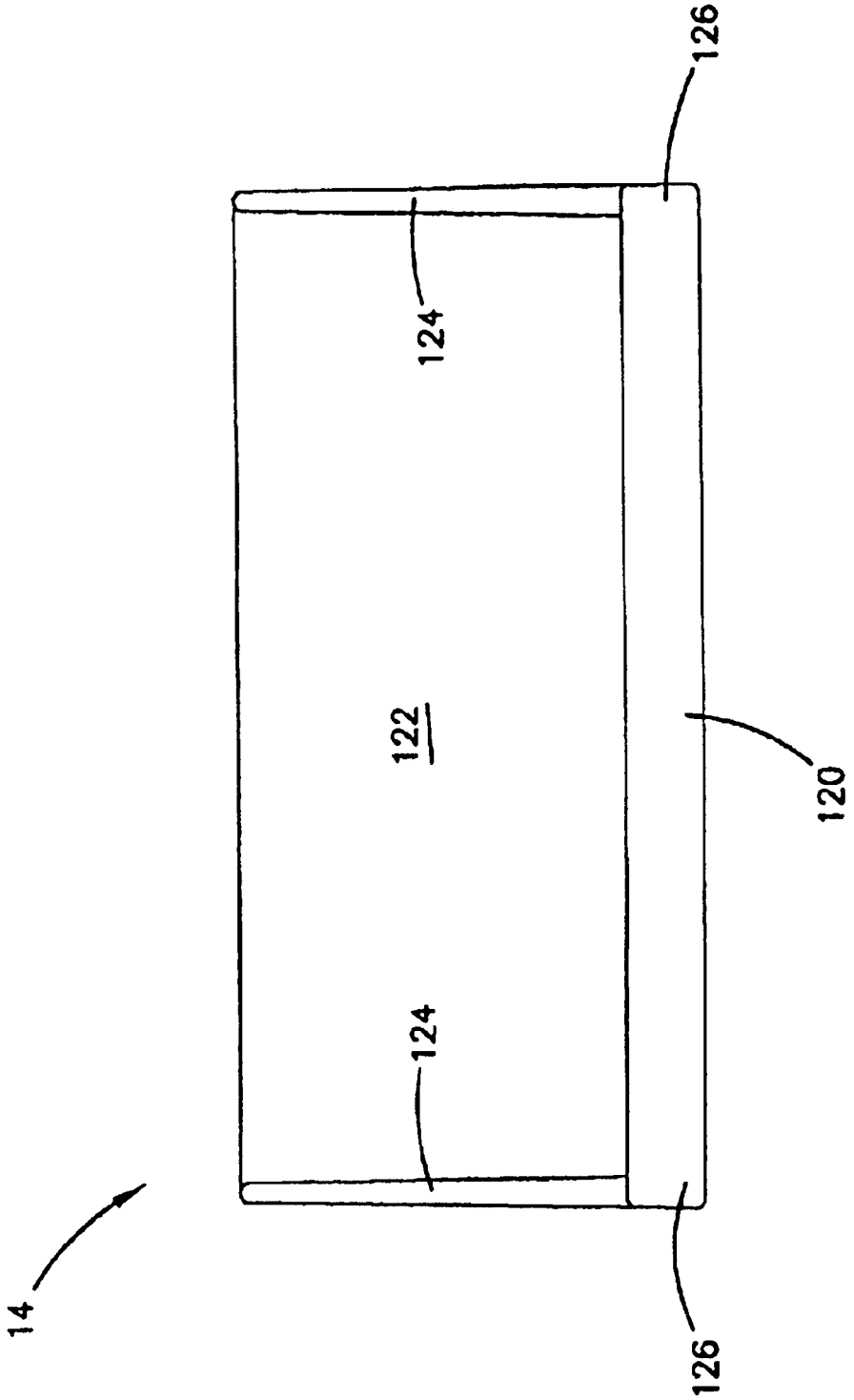

FIG. 23

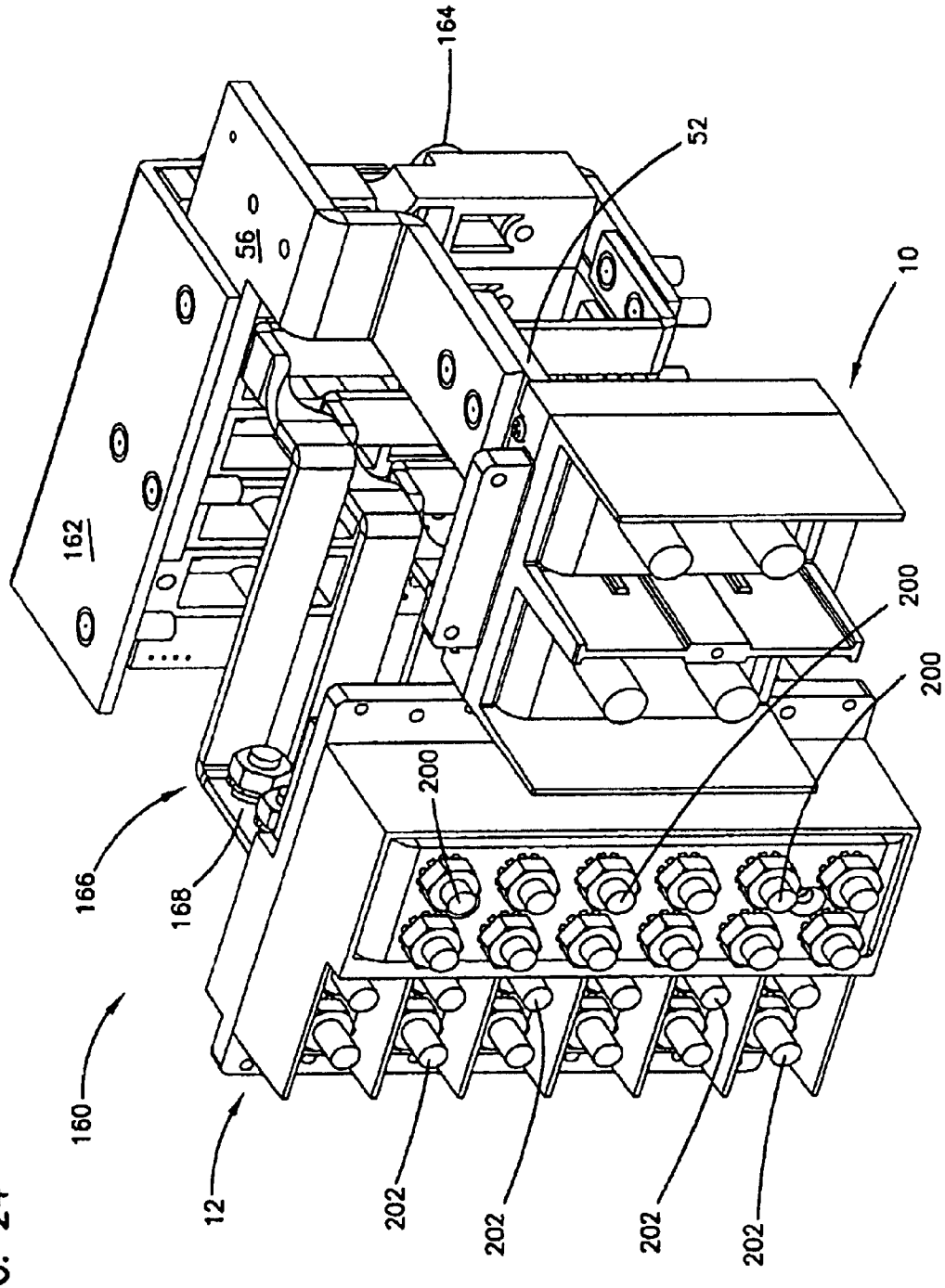

FIG. 24

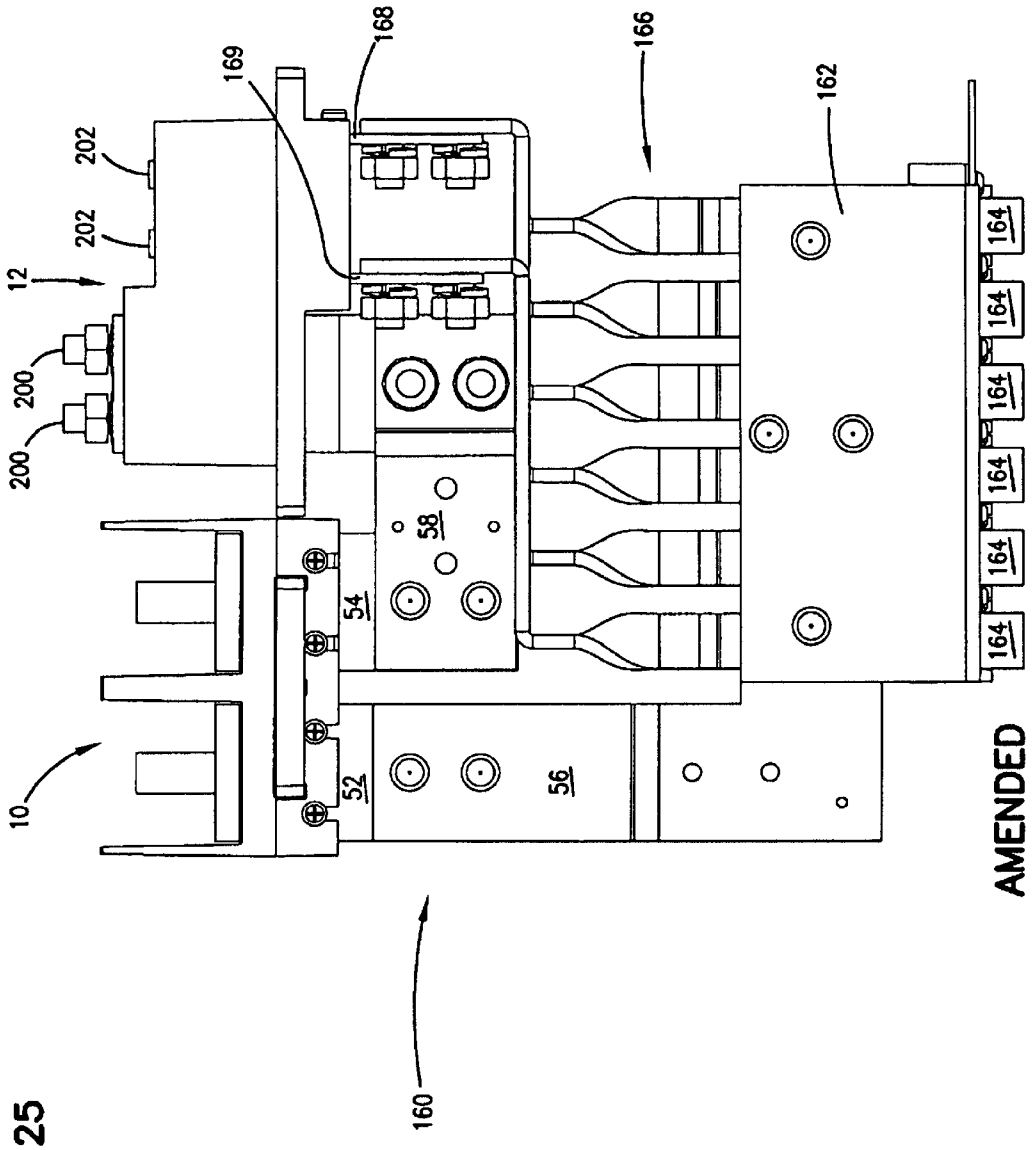
10
12
200
200
202
202
169
168
166
162
164
164
164
164
164
164
58
54
52
56
160
AMENDED

FIG. 25

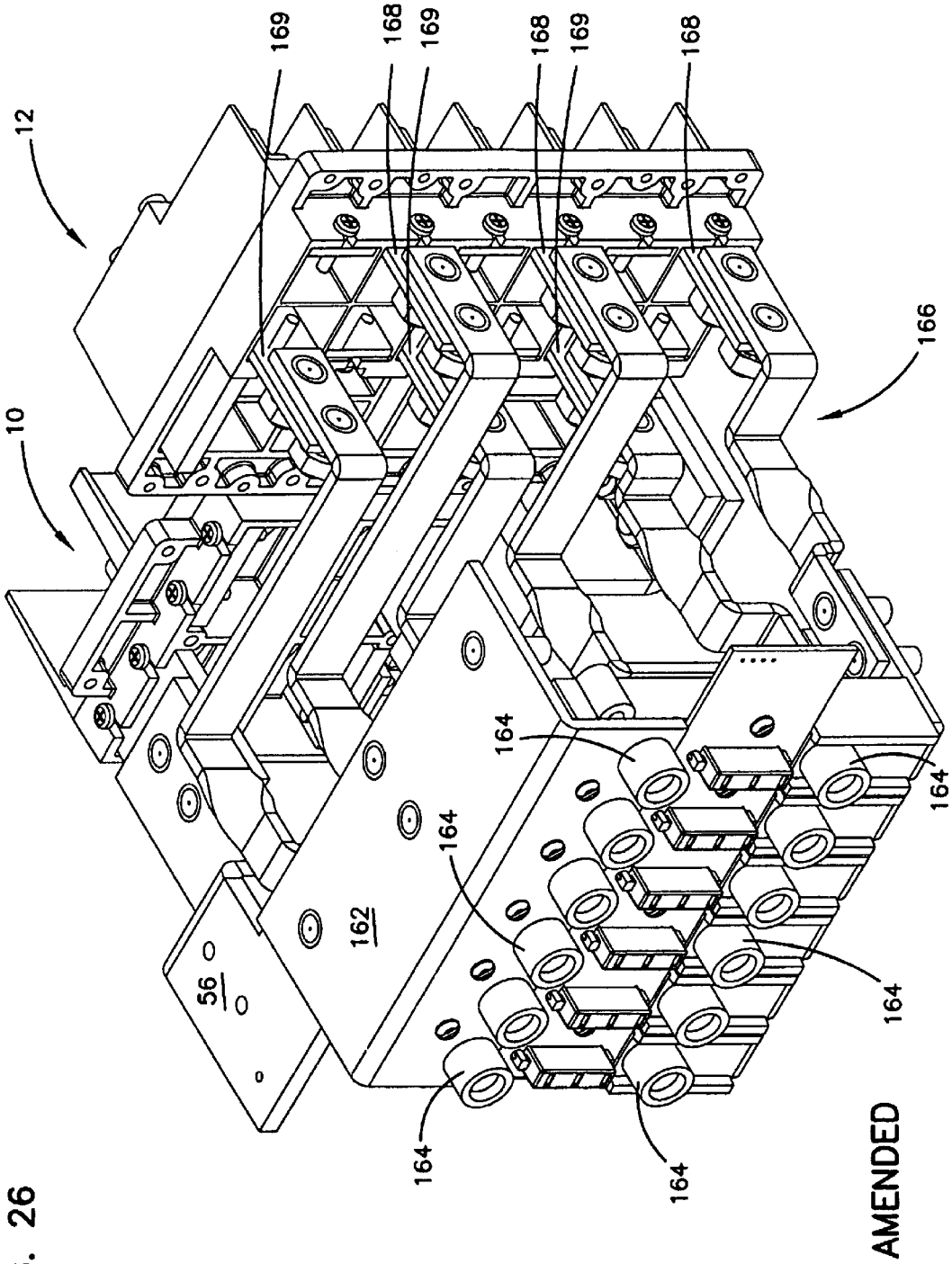

FIG. 26

AMENDED

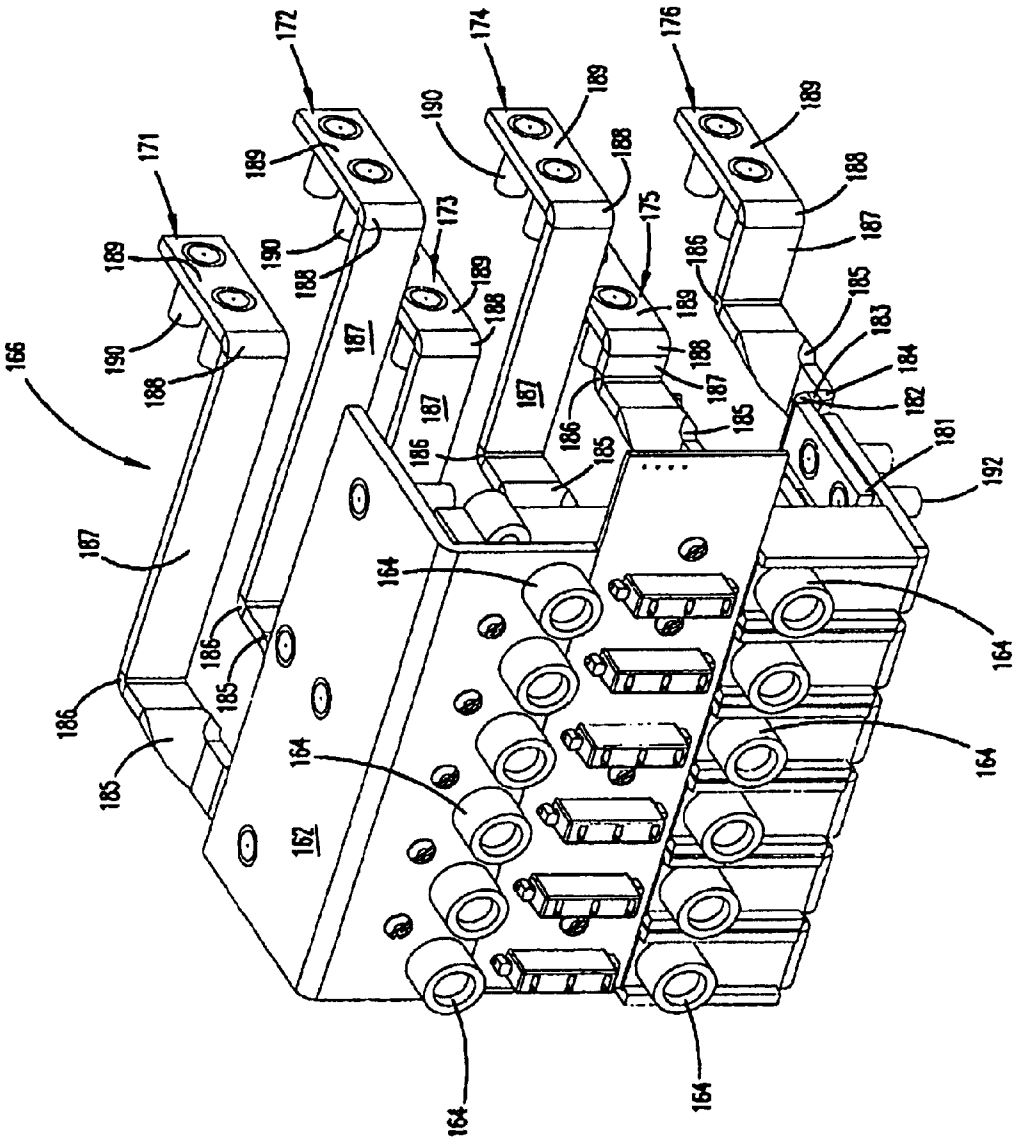
166
171
172
173
174
175
176
181
182
183
184
185
186
187
188
189
190
192
162
164

FIG. 27

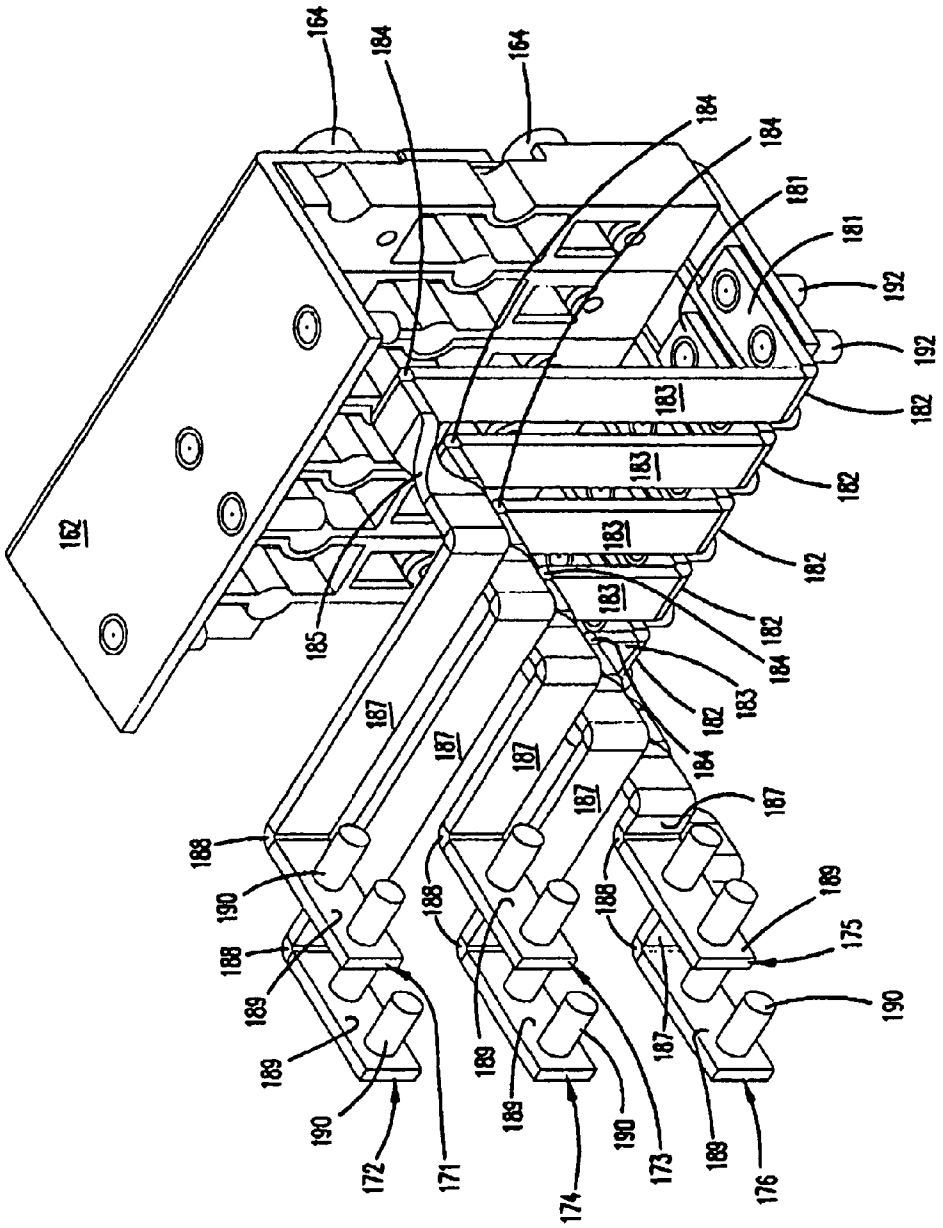
162
164
164
184
184
184
181
181
192
192
182
182
182
182
183
183
183
183
185
187
187
187
187
187
188
188
188
188
189
189
189
189
189
189
190
190
190
190
171
172
173
174
175
176

FIG. 28

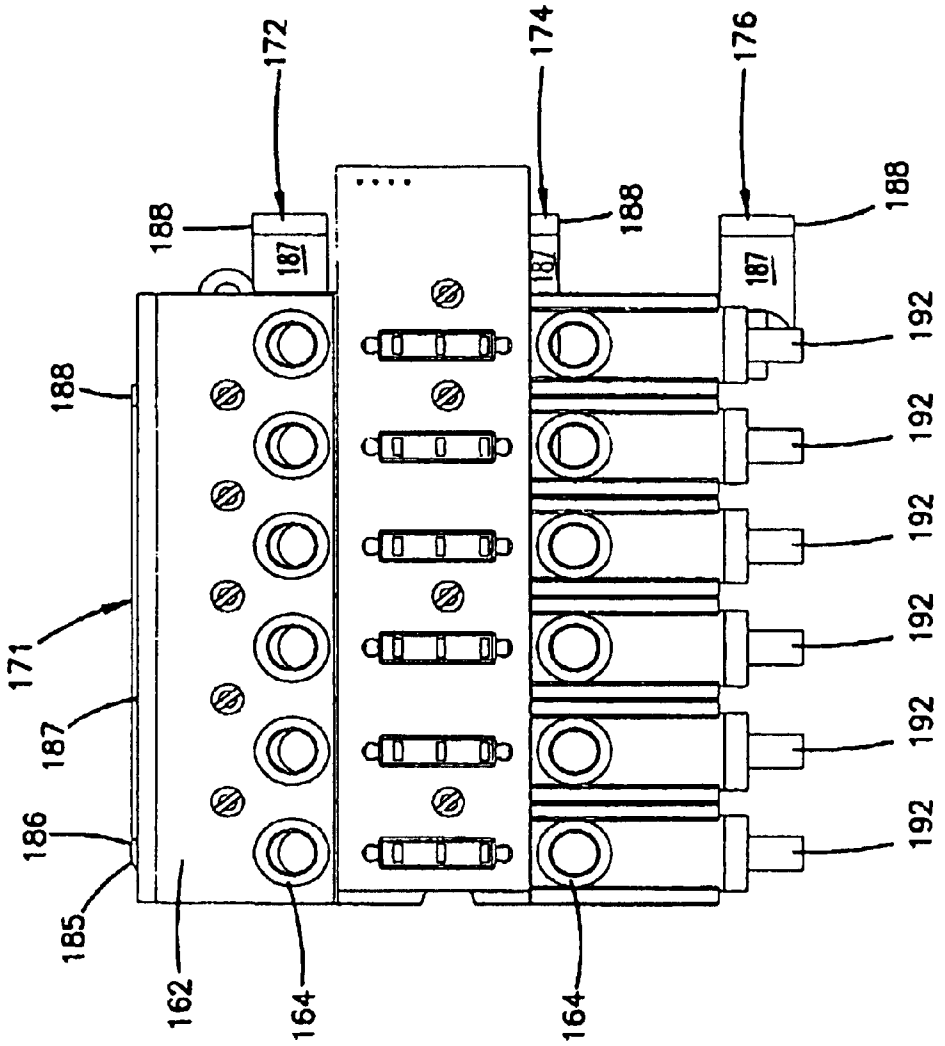
188
171
187
186
185
162
188
172
187
164
174
188
187
164
176
188
187
192
192
192
192
192
192

FIG. 29

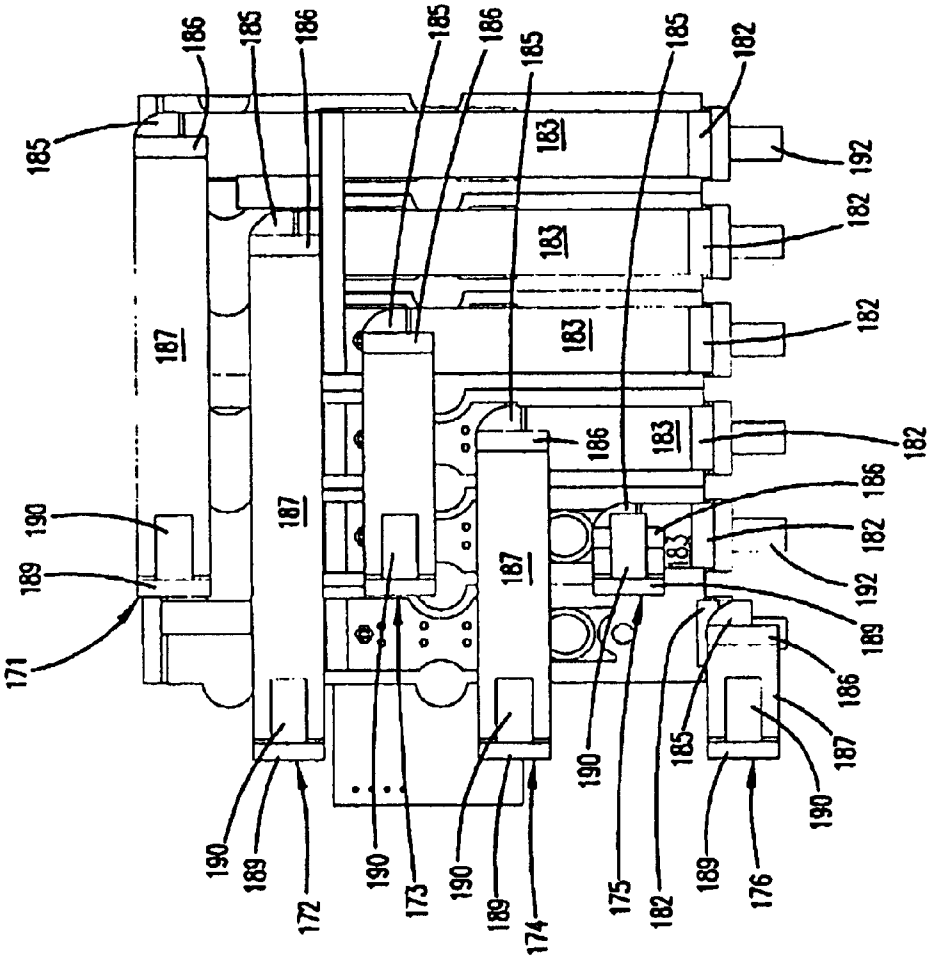

FIG. 30

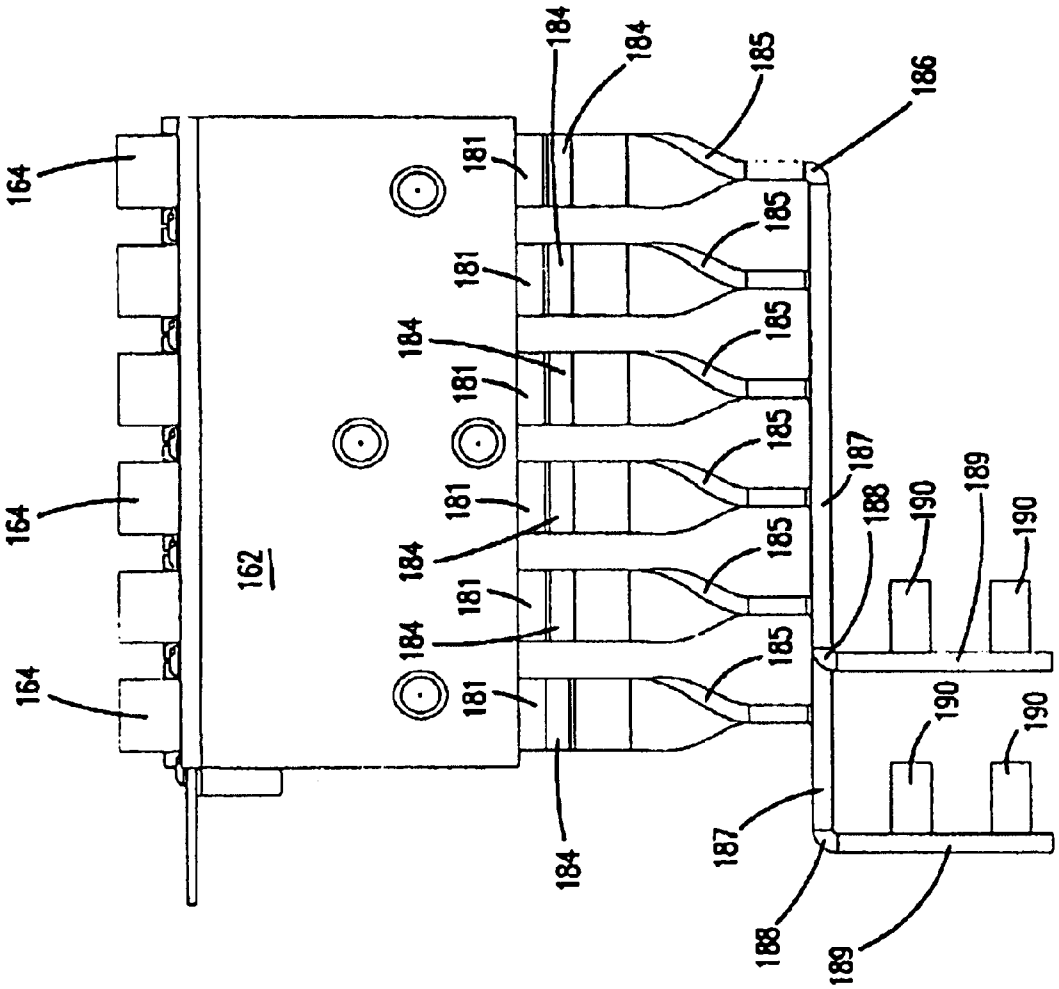
164
164
164
162
181
181
181
181
181
184
184
184
184
184
185
185
185
185
185
186
187
187
188
188
189
189
190
190
190
190

FIG. 31

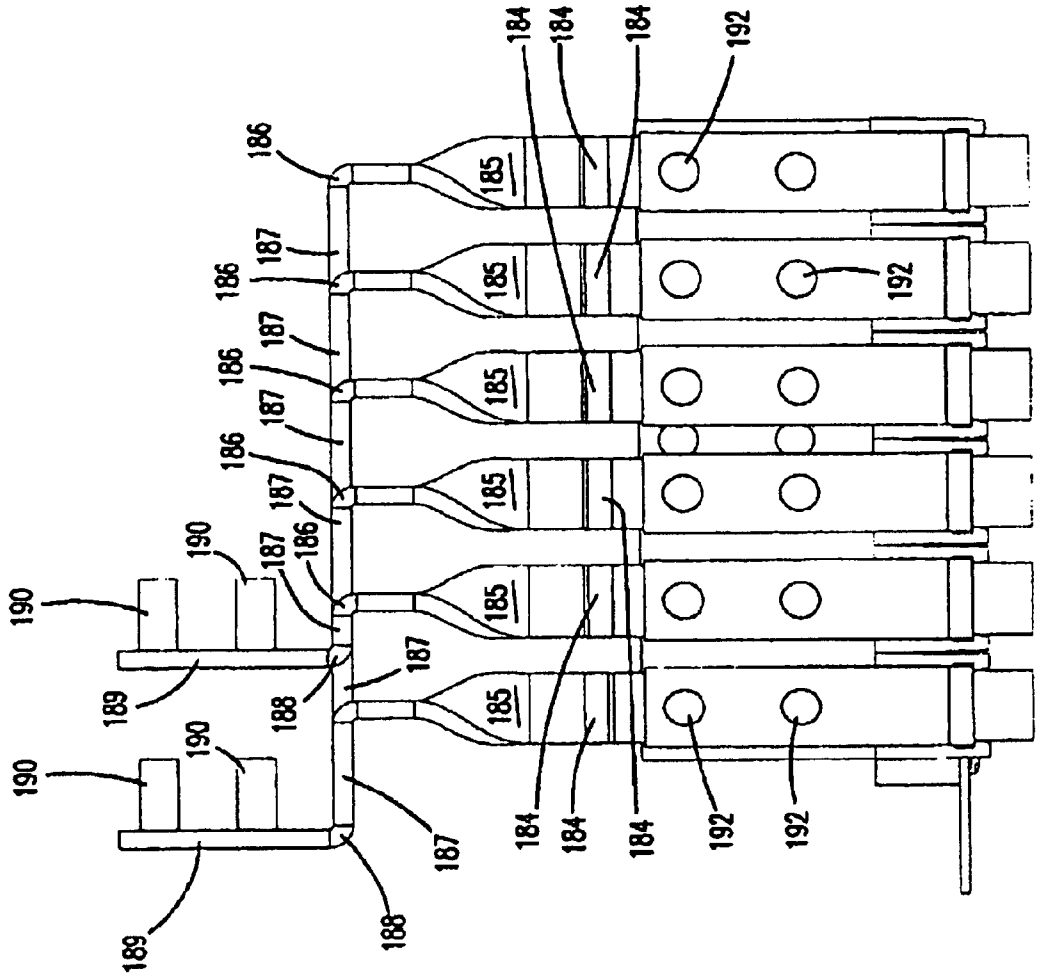
184
184
184
192
186
185
187
186
185
192
187
186
185
187
186
185
187
186
190
187
186
185
190
187
189
188
185
190
190
184
184
184
192
192
187
189
188

FIG. 32

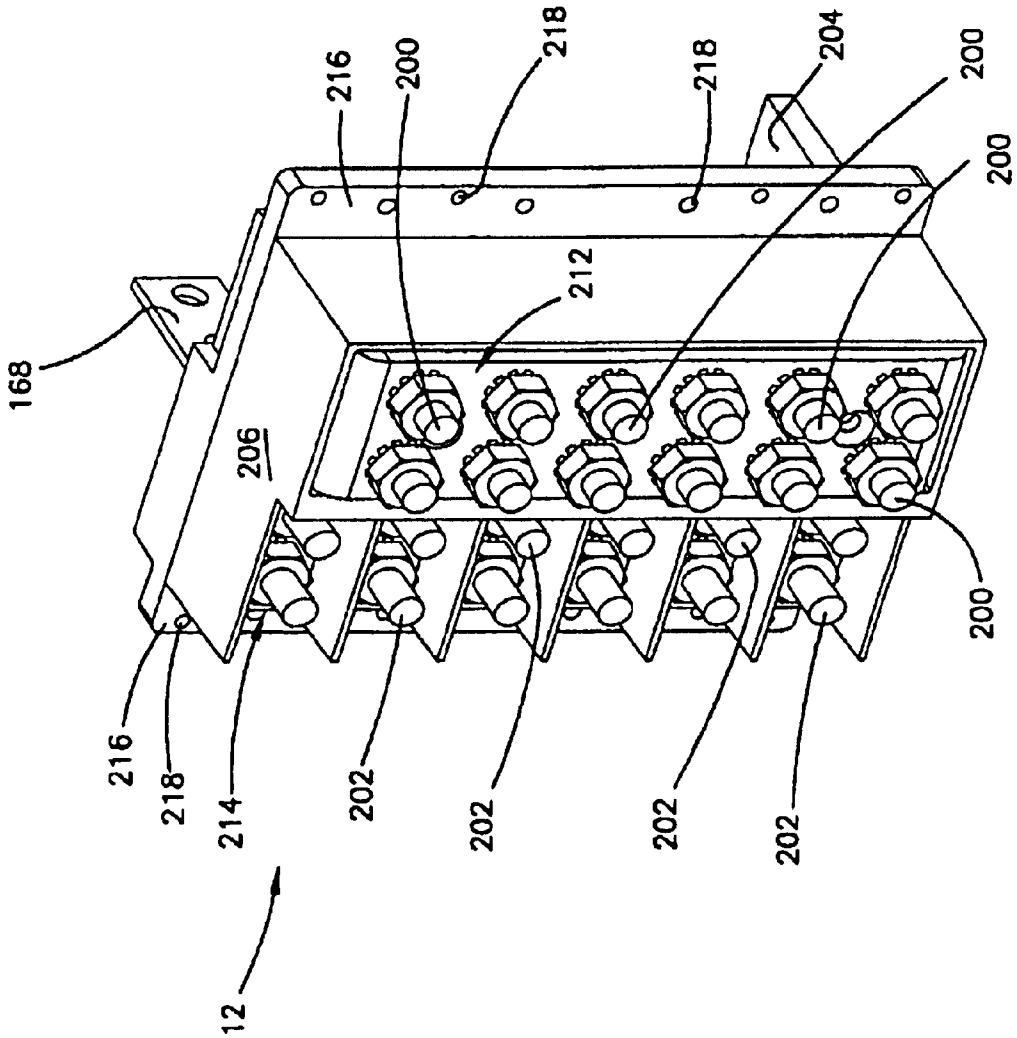
168
216
218
214
12
206
216
200
212
202
202
218
202
218
202
204
200
200
200

FIG. 33

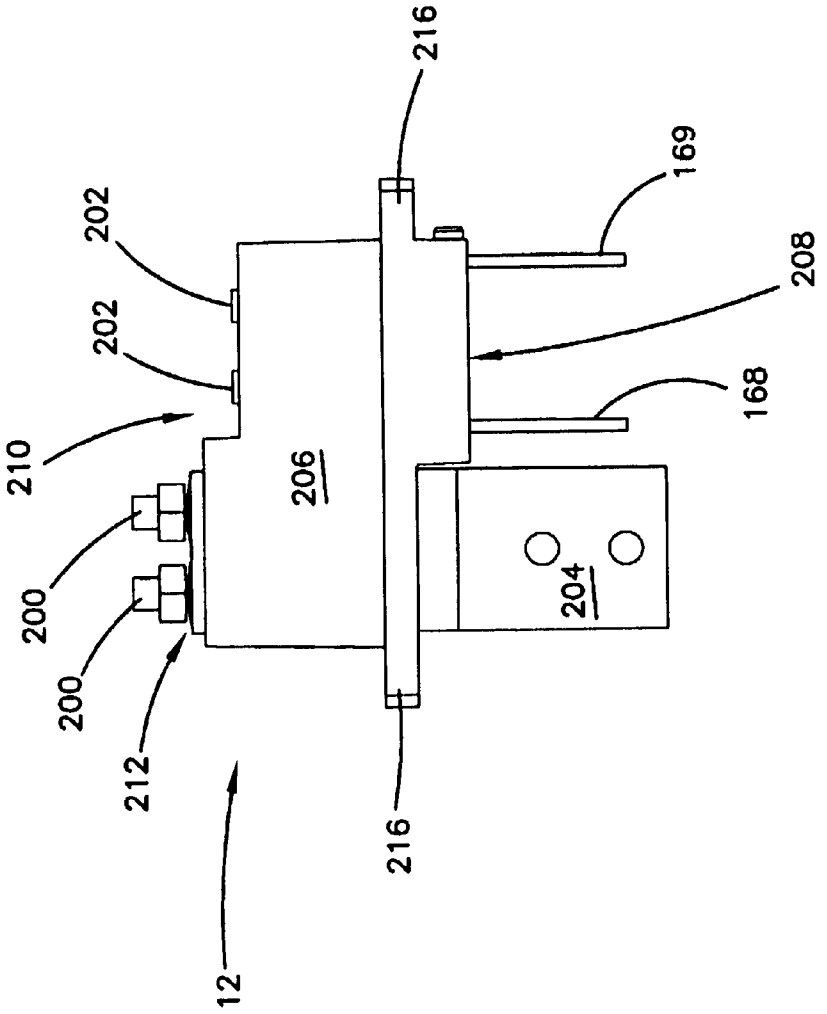

AMENDED

FIG. 34

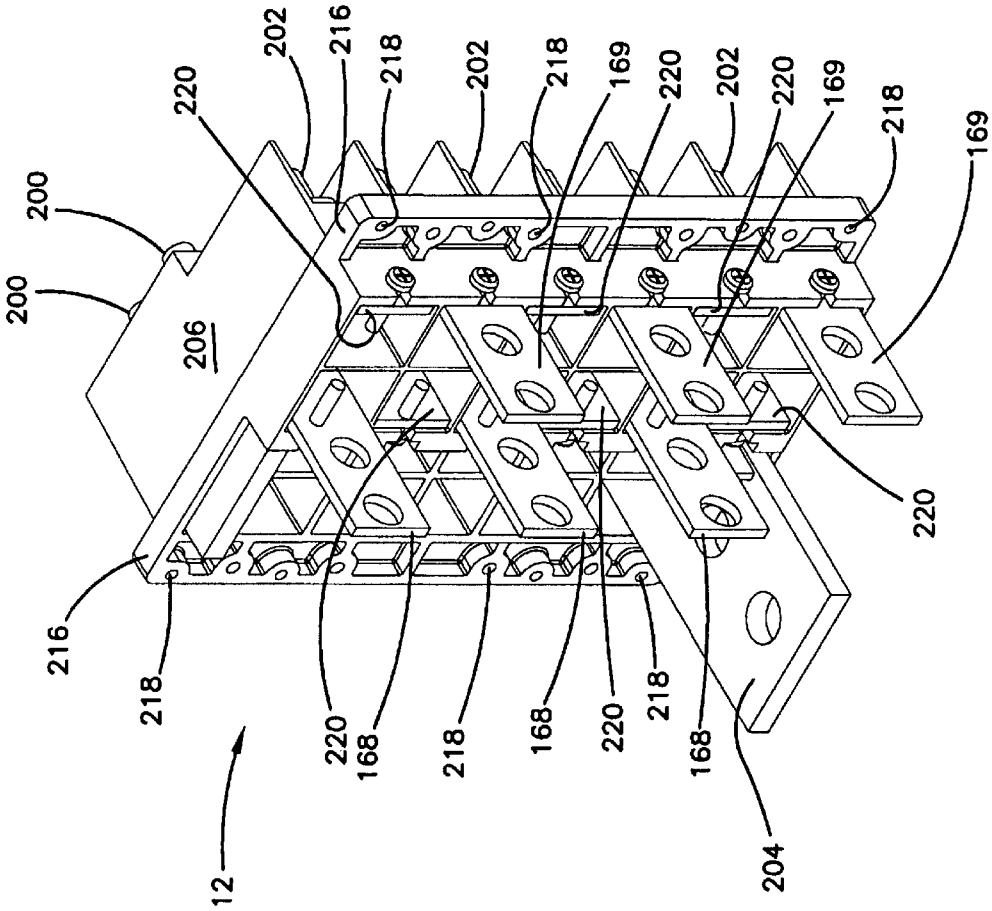

AMENDED

FIG. 35

INPUT POWER CONNECTOR FOR DISTRIBUTION PANEL

Matter enclosed in heavy brackets [ ] appears in the original patent but forms no part of this reissue specification; matter printed in italics indicates the additions made by reissue.

FIELD OF THE INVENTION

The present invention generally relates to power input structures for power distribution panels.

BACKGROUND OF THE INVENTION

Power distribution panels are generally mounted in an electronic equipment rack with other devices requiring a source of electric power. The basic function of such a distribution panel is to receive electric power, typically DC power, from an external power source and distribute this power through a bus bar to a series of individual circuits for delivery to the equipment mounted in the rack or in nearby equipment racks. Typically, these individual circuits are protected by fuses or circuit breakers. Common voltages for these panels are 24 and 48 Volts DC. The bus bars commonly handle up to 300 amps or more and the individual circuits are protected by circuit breakers capable of handling of up to 100 amps or more or by fuses capable of handling up to 125 amps or more. In addition, a power distribution panel may have two separate bus bars, meaning the total current being supplied to a panel could be up to 600 Amps.

The amount of electrical current being supplied to a power distribution panel is sufficient to cause injury to persons working around these panels or to adjacent devices. Protective devices or shields are desirable to guard against accidental contact with the exposed power and return current feeds linking the external power sources to the bus bars within the distribution panels. However, depending on the environment where a particular rack might be installed, these external power feeds may come from above, below or the side of the distribution panel. A distribution panel having a power input structure capable of being easily adapted for receiving and protecting power feeds from multiple directions is desirable.

SUMMARY OF THE INVENTION

The present invention relates to a power input housing with an open ended cavity divided by a centerwall, and a cover for the housing having an extension to close one of the open ends of the cavity when the cover is mounted to the housing. Another aspect of the present invention relates to a power input assembly including a housing with an open ended cavity divided by a centerwall into return and power chambers with conductors mounted within each chamber. A cover for the assembly is provided having an extension to close one of the open ends of the cavity when the cover is mounted to the housing. A further aspect of the present invention relates to a method of attaching power input cables to a power distribution panel using a power input assembly including a housing with an open ended cavity divided by a centerwall into power and return chambers with conductors mounted within each chamber and a cover for the housing having an extension to close one of the open ends of the cavity when the cover is mounted to the housing. The cables are led into either one of the open ends and the cover is used to close off the other open end.

A variety of advantages of the invention will be set forth in part in the description that follows, and in part will be apparent from the description, or may be learned by practicing the invention. It is to be understood that both the foregoing general description and the following detailed description are exemplary and explanatory only and are not restrictive of the invention as claimed.

BRIEF DESCRIPTION OF THE DRAWINGS

The accompanying drawings, which are incorporated in and constitute a part of the description, illustrate several aspects of the invention and together with the description, serve to explain the principles of the invention. A brief description of the drawings is as follows:

FIG. **1** is a rear perspective view of an embodiment of a power distribution panel in accordance with the present invention.

FIG. **2** is a rear view of the power distribution of FIG. **1**, with the mounting flanges removed.

FIG. **3** is a front view of the power distribution panel of FIG. **1**.

FIG. **4** is a top view of the power distribution panel of FIG. **1** with the top cover removed.

FIG. **5** is a rear perspective view of a power input housing in accordance with the present invention.

FIG. **6** is a front perspective view of the power input housing of FIG. **5**.

FIG. **7** is a front view of the power input housing of FIG. **5**.

FIG. **8** is a rear view of the power input housing of FIG. **5**.

FIG. **9** is a top view of the power input housing of FIG. **5**.

FIG. **10** is a cross-sectional view of the power input housing of FIG. **8** taken along line A—A.

FIG. **11** is a rear perspective view of an alternative power input housing in accordance with the present invention.

FIG. **12** is a front perspective view of the power input housing of FIG. **11**.

FIG. **13** is a front view of the power input housing of FIG. **11**.

FIG. **14** is a rear view of the power input housing of FIG. **11**.

FIG. **15** is a side view of the power input housing of FIG. **11**.

FIG. **16** is a cross-sectional view of the power input housing of FIG. **14** taken along line A—A.

FIG. **17** is an exploded rear view of a power input assembly in accordance with the present invention with the cover positioned for entry of power cables from above the assembly.

FIG. **18** is a rear view of the power input assembly of FIG. **17** with the cover removed.

FIG. **19** is a side view of the power input assembly of FIG. **18**.

FIG. **19**A is a side view of the power input assembly of FIG. **19** with the cover in a first position.

FIG. **19**B is a side view of the power input assembly of FIG. **19**A with the cover in a second position.

FIG. **20** is a top view of the power input assembly of FIG. **18**.

FIG. **21** is a front perspective view of a cover for a power input assembly in accordance with the present invention.

FIG. **22** is a rear view of the cover of FIG. **21**.

FIG. **23** is a bottom view of the cover of FIG. **21**.

FIG. **24** is a rear perspective view of an alternative power distribution bus in accordance to the present invention for use with the power distribution panel of FIG. **1**.

FIG. **25** is a top view of the power distribution bus of FIG. **24**.

FIG. **26** is a front perspective view of the power distribution bus of FIG. **24**.

FIG. **27** is a front perspective view of a portion of the power distribution bus of FIG. **24**.

FIG. **28** is a rear perspective view of the portion of the power distribution bus of FIG. **26**.

FIG. **29** is a front view of the portion of the power distribution bus of FIG. **26**.

FIG. **30** is a rear view of the portion of the power distribution bus of FIG. **26**.

FIG. **31** is a top view of the portion of the power distribution bus of FIG. **26**.

FIG. **32** is a bottom view of the portion of the power distribution bus of FIG. **26**.

FIG. **33** is a rear perspective view of the power output assembly of FIG. **1**.

FIG. **34** is a top view of the power output assembly of FIG. **33**.

FIG. **35** is a front perspective view of the power output assembly of FIG. **33**.

DETAILED DESCRIPTION

Reference will now be ma de in detail to exemplary aspects of the present invention which are illustrated in the accompanying drawings. Wherever possible, the same reference numbers will be used throughout the drawings to refer to the same or like parts.

To prevent accidental contact with the power and return power leads supplying electrical power to a power distribution panel **1**, a power input assembly **10** is provided about each power input location. Assembly **10** is designed to provide separation and isolation of the power or battery and return leads from each other and prevent people and/or other devices from contacting the leads and receiving an electrical shock, causing harm to personnel or property.

Internally, due to the amount of current in the power distribution buses **60** and **160**, some shielding of the individual power leads **166** prevents unwanted arcing or current induction between adjacent leads. This shielding can be accomplished by coating the leads with an electrically insulative material or by providing sufficient separation of the leads. Providing separation of leads **166** also provides improved access to components within panel **1** for users.

Referring now to FIGS. **1** through **4**, a power distribution panel **1** with two power busses and two power input assemblies **10** installed is shown. A first power input assembly **10** is shown with cover **14** in place and a second assembly **10** is shown with cover **14** removed. Panel **1** includes a housing with a rear face **28**, a front face **34**, a top **26**, a bottom **44** and two opposing sides **20**. Mounted to each side **20** proximate front face **34** are mounting flanges **18** for mounting panel **1** to a telecommunications equipment rack. Because telecommunications equipment racks vary in width, flanges **18** include several columns of mounting holes and may be mounted in different orientations. Flange **18** includes long side **21** and short side **19**. Long side **21** includes two columns of mounting holes **23** and **24**. Short side **19** includes a single column of mounting holes **22**. Panel **1** can be mounted to a variety of different width mounting racks by altering the orientation of flanges **18** mounted on either side **20** of panel **1**. For example, mounting flanges **18** with short flange **19** adjacent both sides **20** would allow panel **1** to mounted to a relatively wider rack, while mounting flanges **18** with long side **21** adjacent sides **20** would permit panel **1** to be mounted to a relatively narrower rack. Additional sizes and configurations of flanges **18** are anticipated which would permit panel **1** to be mounted to telecommunications racks of different widths.

Mounted to rear face **28** are two sets of power output terminals **12**. Output terminals **12** are then connected to the power input terminals of telecommunications devices to supply power to those devices. In FIGS. **2** and **4**, one of the sets of output terminals **12** is covered by a protective housing **16** to prevent accidental contact with the terminals. Chassis grounds **30** are provided on rear face **28** and allow panel **1** to be electrically connected to a ground. Panel **1** includes an internal circuitry which senses interruptions or other problems with the power flowing through the panel. This circuitry is tied to an alarm which can provide a visible, audible or electronic signal when a power flow problem is detected. The electronic alarm signals allow the alarm status of a power panel to be remotely or centrally monitored. Power alarm connector **32** is provided on rear face **28** for the transmission of the electronic signals for remote or central monitoring.

On the front face of panel **1** are circuit breakers **38** and fuses **42** to provide protection for the equipment to which panel **1** is supplying power. Additional breaker locations **36** are available to allow more breakers to be mounted to panel **1**. Circuit breakers **38** could alternatively replaced by fuses. Signal lamps **40** are connected with the alarm in panel **1** to provide the visible signal if a power flow problem is detected. Holder **46** is provided on front face **34** to maintain indicia regarding the devices which are being supplied power by panel **1**.

Power input assembly **10** includes a power conductor **52** with posts **48** and a return conductor **54** with posts **50**. Conductors **52** and **54** are attached to buses **60** inside panel **1**. Posts **48** are connected with the power terminal of the power source supplying panel **1** and posts **50** are connected with the return terminal of the power source supplying the panel. Posts **48** are electrically connected to conductor **52**, which are in turn electrically connected with a power bus end **56** of bus **60**. Posts **50** are electrically connected to conductor **54**, which are in turn electrically connected with a return bus end **58** of bus **60**.

Referring now to FIGS. **1** through **10**, assembly **10** includes a housing **70** [with] *defining a cavity* (*the housing cavity defined by cavities 71 and 77*). *The housing 70 includes* opposing sidewalls **72**, a base **76** extending between the sidewalls and a centerwall **74** parallel to the sidewalls and generally bisecting the base into two halves. In centerwall **74** is an opening **94** for receiving a fastener holding cover **14** in place on housing **70**. Between sidewalls **72** on either side of centerwall **74** are defined *the* cavities **71** and **77** for receiving power cables from an external power supply. Each sidewall **72** has a first end **73** and a second end **75**. Between first ends **72** is endwall **88** which cooperates with base **76** to form conductor openings **78** proximate first ends **73**. Likewise, between second ends **75** is endwall **88** which cooperates with base **76** to form conductor openings **78** proximate second ends **75**. Extending from each endwall **88** is mounting tab **80**, which include openings **82** to receive fasteners such as screws to mount housing **70** to rear face **28**. Along endwalls **88** opposite base **76** are openings **92**, which receive fasteners such as screws for holding conductors **52** and **54** to housing **70**, as is discussed below. Along the bottom of base **76** and extending between the opposing sidewalls **72** and opposing endwalls **88** are reinforcing ribs **84**.

Ribs **84** provide added strength and stiffness to housing **70**. Likewise, along the bottom of mounting tabs **80** are reinforcing ribs **86**, and extending from the top of base **76** along centerwall **74** are reinforcing ribs **96**. Proximate the junctions of endwalls **88** and reinforcing rib **84** are opening **90** for receiving fasteners such as screws.

As shown in FIGS. **5** though **10**, mounting tabs **80** are located proximate conductor openings **78**, and cavities **71** and **77** are oriented to receive power cables from above or below panel **1**. As shown in FIG. **1**, housing **70** is mounted to rear face **28** so that mounting tabs **80** are on the inside of panel **1** and sidewalls **72** and centerwall **74** extend through rear face **28** outside of panel **1**. Mounting openings **15** in rear face **28** are located above and below housing **70** and are located so that a fastener such as a screw can be inserted through an opening **15** and engage opening **82** to hold housing **70** to rear face **28**.

Referring now to FIGS. **11** through **16**, housing **170** is shown. Housing **170** is similarly constructed to housing **70**, with mounting tabs **80** located on different opposing walls. If housing **170** were mounted to rear face **28** of panel **1**, cavities **71** and **77** would be oriented to receive power cables from either the left side or right side of panel **1**. Both housing **70** and housing **170** are made of electrically insulative material.

Referring now to FIGS. **17** through **20**, a power input assembly is shown. In FIG. **17**, conductors **52** and **54** include of a first leg **106**, a cross leg **108** and a second leg **110**. First and second legs **106** and **110** extend through openings **78** of housing **70** and cross leg **108** lies along the top of base **76**. Conductor **52** is placed within cavity **71** and conductor **54** is placed within cavity **77**. Posts **48** extend from cross leg **108** of conductor **52** opposite base **76** and posts **50** extend from cross leg **108** of conductor **54** opposite base **76**. Second leg **110** and first leg **106** include openings **102**. Fasteners such as screws **100** are inserted through openings **92** in endwalls **88** and engage openings **102**, holdings the straps to housing **70**. Proximate an end of second leg **110** opposite cross leg **108** are openings **104** for attaching and electrically connecting conductor **52** to power bus end **56** of bus **60**, and for attaching and electrically connecting conductor **54** to return bus end **58** of bus **60**. Conductors **52** and **54** are held by housing **70** and are separated from potential contact by centerwall **74**.

FIGS. **21** through **23** show cover **14**. References to housing **70** are intended to apply also for housing **170**. Cover **14** includes a top **120** and a lower extension **122**. Top **120** is sized to fit on housing **70** covering cavities **71** and **77**, so that ledges **126** rest just outside of the top of sidewalls **72**, extension **122** is proximate one of first end **73** or second end **75** of sidewalls **72** and ledge **134** is at the other of first end **73** or second end **75**. When mounted to housing **70**, extension **122** extends between sidewalls **72** across both cavities **71** and **77** and between top **120** and endwall **88**. Ledges **124** rest just outside of first or second ends **73** or **75** of sidewalls **72** when cover **14** is mounted to housing **70**. Ledge **134** extends between parallel to extension **122** on the opposite open end of housing **70** but does not extend far enough to close the open end. In this position, cover **14** closes off access to cavities **71** and **77** from the rear and from one of the two ends. Ledges **126** and **134** are shown as the same size but may be of different sizes. Ledges **126** may extend up to the same extent as extension **122** while ledge **134** may not be made so large as to block the open end opposite extension **122**.

Mounting opening **128** in top **120** includes a narrow end **130** and a wide end **132**. Opening **128** is sized and located to receive a fastener extending from opening **94** in housing **70** to hold cover **14** to housing **70**. The shape of opening **128** is sized to allow cover **14** to be removed from housing **70** without completely removing the screw from opening **94**. Narrow end **130** and wide end **132** are oriented to be generally parallel to ledges **126**.

Cover **14** and housing **70** are designed so that cover **14** may be mounted to housing **70** with extension **122** at either first end **73** (as shown in FIG. **19**A) or second end **75** (as shown in FIG. **19**B) of sidewalls **72**. This will permit power supply cables from an external power source to enter from above or below as the installation environment dictates without requiring a different version of cover **14** for each direction of entry. With regard to housing **170**, power cables can enter the housing from either end and cover **14** will be installed with extension **122** covering the opposite end. Cover **14** is made of an electrically insulative material.

Referring now to FIGS. **24** through **26**, an alternative power distribution bus **160** is shown. Bus **160** shown would be used in place of the right-side bus **60** in FIG. **4**, above, and includes the same rear power input assembly **10** and rear power output assembly **12**. Power conductor **42** is electrically connected with power bus end **56**, which in turn feeds the power into a protective device mount **162**. Protective device mount **162** permits protective devices such as circuit breakers **38** to be mounted in the electrical path. Leads **166** carry the power from protective device mount **162** to offset connectors **168** and **[170]** *169* of power output assembly **12**. Offset connectors **168** and **[170]** *169* are configured to allow adjacent leads **166** to connect with rear output assembly **12** in staggered columns. Three offset connectors **168** are located in a first column and three offset connectors **[170]** *169* are located in a second column. This offsetting of adjacent leads and power output connectors provides added space between the connections. This added space reduces the possibility of current in one lead inducing current in an adjacent lead in the area of the connection with power output assembly **12**. Leads **166** as shown are crafted from bar stock. To reduce corrosion and other related occurrences, this bar stock may be plated with tin, lead or another suitable material.

Referring now to FIGS. **27** through **32**, protective device mount **162** and leads **166** are shown with the other components of power distribution bus **160** removed. Leads **166** are individually numbered as leads **171** through **176**, with lead **171** being the topmost lead and lead **176** being the bottommost lead. Leads **171**, **173**, and **175** are configured to connect with offset connectors **168** of power output assembly **12**, while leads **172**, **174** and **176** are configured to connect with offset connectors **[170]** *169*. Each of the leads is comprised of five sections, **181**, **183**, **185**, **187** and **189**, connected at four angles, **182**, **184**, **186** and **188**. A connector section **181** of each lead **171** through **176** is electrically attached to protective device mount **162**. An angle **182** then links connector segment **181** with a riser segment **183**. An angle **184** in turn connects riser segment **183** with a twisted segment **185**. An angle **186** connects twisted segment **185** with a transverse segment **187**. An angle **188** connects transverse segment **187** with output connector segment **189**. Posts **190** are mounted on output connector segments **189** to the electrical and physical contact between leads **166** and offset connectors **168** and **[170]** *169*. Posts **192** are mounted on connector segment **181** to improve electrical and physical contact between leads **166** and protective device mount **162**.

Referring now to FIGS. **33** through **35**, output power assembly **12** is shown in greater detail, with leads **166** removed. Output power assembly **12** includes an output housing **206** with an inner face **208** and an outer face **210**.

Return terminals **200** and battery terminals **202** are in parallel columns on outer face **210** and located to different planes, **212** and **214**, respectively, to provide separation and improved organization of battery and return cables from telecommunications equipment receiving power from panel **1**.

As shown, output power assembly **12** is configured to supply power to six such devices, having six pairs of battery terminals **202** and six pairs of return terminals **200**. Alternative configurations having more or fewer pairs of terminals can be used depending on size constraints and the number of devices requiring power. Output housing **206** is a uni-body housing, so that the same housing includes provisions for both battery and return terminals.

Terminals **200** and **202** are grouped in pairs to improve the quality and physical surface area of contact between the cables to and from the devices and the terminals, and to prevent rotation of the cables attached to the terminals. Return terminals **200** are all linked to a common return strap **204** which extends through output housing **206** from outer face **210** beyond inner face **208**. When output power assembly **12** is mounted to panel **1**, return strap **204** is electrically connected to return bus end **58**.

Each pair of battery terminals **202** are connected to a conductor strap **220** which extends through output housing **206** from outer face **210** beyond inner face **208** and includes an offset connector **168** or **[170]** *169*. As detailed above, offset connectors **168** and **[170]** *169* are electrically connected with segments **189** of leads **166** when output power assembly **12** is mounted to panel **1**.

Flanges **216** and fastener openings **218** are provided on output housing **206** to allow power output assembly **12** to be securely and removably fastened to rear face **28** of panel **1**, as shown in FIG. **1**.

Having described preferred aspects and embodiments of the present invention, modifications and equivalents of the disclosed concepts may readily occur to one skilled in the art. However, it is intended that such modifications and equivalents be included within the scope of the claims which are appended hereto.

What is claimed is:

1. A power input housing for a power distribution panel comprising:

a body defining a cavity having a first open end and a second open end, the body including a base, opposing sidewalls extending from the base and a center wall extending from the base;

a removable cover mounted to the body;

the cavity being defined by the sidewalls, the base and the removable cover, and being divided longitudinally by the center wall, the center wall substantially parallel to the sidewalls, the sidewalls and base each having a first end adjacent and partially defining the first open end and each having a second end adjacent and partially defining the second open end;

the base having access openings at the first and second ends of the cavity on both sides of the center wall to permit electrical conductors to pass through the base;

the cover having a major surface and a lower extension, the cover being mountable in either a first position or a second position on the housing, such that when the cover is mounted in the first position the lower extension closes off the first open end of the cavity and the second open end of the cavity remains open, and when the cover is mounted in the second position the lower extension of the cover closes off the second open end of the cavity and the first open end remains open;

a mounting tab projecting outward from the base including a fastener opening; and

the body and the cover being made of an electrically insulative material.

2. The power input housing of claim **1**, wherein the cavity is an outer cavity, and further comprising an inner cavity;

the inner cavity defined by an extension of the sidewalls, with the base of the body positioned between the outer and inner cavities, wherein ends of the inner cavity closed by a pair of opposing end walls, the end walls extending from the base proximate the first and second open ends of the outer cavity;

the access openings in the base of the body providing access to the inner cavity.

3. The power input housing of claim **2**, wherein the mounting tab is a first mounting tab, and further comprising a second mounting tab, wherein the first and second mounting tabs project outward from the sidewalls.

4. The power input housing of claim **2**, wherein the mounting tab is a first mounting tab, and further comprising a second mounting tab, wherein the first and second mounting tabs project outward from the end walls.

5. The power input housing of claim **2**, wherein the cover has four sides, the lower extension positioned along one side, and further comprising a lip extending from the major surface along each of the other three sides.

6. The power input housing of claim **5**, wherein the lower extension includes first and second side lips.

7. The power input housing of claim **2**, wherein the major surface of the removable cover includes a fastener hole.

8. A power distribution panel comprising:

a panel housing including a front and a rear;

the front including circuit control devices;

the rear including a power input assembly and a power output assembly;

the power input assembly including first and second parallel cavities each defining first and second open ends, and a cover including a major surface and a lower extension, the cover mountable in one of two selectable positions wherein in the first position the first open ends are closed and in the second position the second open ends are closed.

9. The power distribution panel of claim **8**, wherein the power input assembly includes first and second outer walls, and an inner center wall between the first and second outer walls, the first and second outer walls and the inner wall defining the first and second parallel cavities.

10. The power distribution panel of claim **9**, wherein the inner wall defines a first fastener opening, and the cover defines a second fastener opening alignable with the first fastener opening in either of two selectable positions of the cover.

11. The power distribution panel of claim **9**, wherein the cover has four sides, the lower extension positioned along one side, and further comprising a lip extending from the major surface along each of the other three sides.

12. The power distribution panel of claim **11**, wherein the lower extension includes first and second side lips.

13. The power distribution panel of claim **8**, wherein the cover has four sides, the lower extension positioned along one side, and further comprising a lip extending from the major surface along each of the other three sides.

14. The power distribution panel of claim **13**, wherein the lower extension includes first and second side lips.

15. The power distribution panel of claim **8**, wherein the power input assembly includes mounting tabs defining fastener holes for mounting the power input assembly to the rear of the panel housing.

16. A power input assembly comprising:

a housing including a cavity, the cavity defined by opposing sidewalls, a base and a removable cover, the cavity having a first open end and an opposite second open end;

the cavity including a longitudinally extending power chamber and a longitudinally extending return chamber;

the power chamber having a conductor which passes through the base of the cavity and adapted for receiving a conductor from a power terminal of an electrical power source, and the return chamber having a conductor which passes through the base of the cavity and adapted for receiving a conductor from a return terminal of the electrical power source;

the cover having a lower extension and being mountable in either a first position or a second position on the housing, such that when the cover is mounted in the first position the lower extension closes off the first open end of cavity and the second open end of the cavity remains open, and when the cover is mounted in the second position the lower extension closes off the second open of the cavity and the first open end remains open.

17. The power input assembly of claim **16**, further comprising wires from the electrical power source, wherein the wires extend through one of the first and second open ends of the cavity and are attached to the conductors, and the cover is mounted in the second or the first position, respectively.

18. The power input assembly of claim **16**, wherein the housing includes a mounting tab projecting outward from the base.

19. The power input assembly of claim **16**, wherein the housing includes two mounting tabs, with one mounting tab extending from the base proximate the first open end and one mounting tab extending from the base proximate the second open end.

20. The power input assembly of claim **16**, wherein the housing includes two mounting tabs, with one mounting tab extending from the base proximate each of the sidewalls.

21. A method of attaching power cables to a power distribution device, the method comprising the steps of:

providing a power input assembly mounted to the power distribution panel, the power input assembly including:

a housing including a cavity having a first open end and a second open end on opposite sides of the housing;

the cavity defining a power chamber having a conductor which passes into the power distribution panel for connecting with a wire from a power terminal of an electrical power source, and a return chamber having a conductor which passes into the power distribution panel for connecting with a wire from a return terminal of an electrical power source;

positioning power and return cables in the respective first and second open ends of the housing;

attaching the power cable to the conductor in the power chamber;

attaching the return cable to the conductor in the return chamber; and

placing a cover on the housing wherein the cover has a lower extension to close off the other of the first and second open ends of the cavity.

22. The method of claim **21**, wherein the first and second open ends are oriented vertically.

23. The method of claim **21**, wherein the first and second open ends are oriented horizontally.

24. A power input housing for a power distribution panel comprising:

a body including a base and a center wall extending from the base; and

a removable cover mounted to the body, the cover including a major surface and a lower extension, the cover and the body defining a cavity divided longitudinally by the center wall;

the base including access openings on both sides of the center wall to permit electrical conductors to pass through the base;

wherein the cover is mountable in either a first position or a second position relative to the body such that when the cover is mounted in the first position, the lower extension encloses a first end of the cavity while a second end of the cavity remains open, and such that when the cover is mounted in the second position, the lower extension of the cover encloses the second end of the cavity while the first end remains open;

wherein the body and the cover are made of an electrically insulative material.

25. The power input housing of claim 24, wherein the body includes opposing sidewalls extending from the base.

26. The power input housing of claim 25, wherein the center wall is substantially parallel to the opposing sidewalls.

27. The power input housing of claim 24, further including a mounting tab projecting outward from the base, the mounting tab including a fastener opening.

28. The power input housing of claim 27, wherein the major surface of the removable cover includes a fastener hole.

29. A power distribution panel comprising:

a panel housing having a front and a rear;

circuit control devices located at the front of the panel housing; and

a power input assembly and a power output assembly located at the rear of the panel housing, the power input assembly including a cover having a major surface and a lower extension, the power input assembly defining first and second parallel cavities, the cover of the power input assembly being mountable in one of two selectable positions;

wherein in a first position of the two selectable positions, first ends of the first and second parallel cavities are closed, and in a second position of the two selectable positions, second ends of the first and second parallel cavities are closed.

30. The power distribution panel of claim 29, wherein the power input assembly includes first and second outer walls, and an inner center wall between the first and second outer walls, the first and second outer walls and the inner center wall defining the first and second parallel cavities.

31. The power distribution panel of claim 30, wherein the inner wall defines a first fastener opening, and the cover defines a second fastener opening alignable with the first fastener opening in either one of the two selectable positions of the cover.

32. The power distribution panel of claim 29, wherein the power input assembly includes mounting tabs defining fastener holes for mounting the power input assembly to the rear of the panel housing.

33. A power input assembly comprising:

a housing and a removable cover, the housing and cover defining a cavity, the cavity including a longitudinally extending power chamber and a longitudinally extending return chamber;

a power conductor at least partially located within the power chamber, the power conductor being adapted to interconnect to a power terminal of an electrical power source;

a return conductor at least partially located within the return chamber, the return conductor being adapted to interconnect to a return terminal of the electrical power source;

wherein the removable cover includes a lower extension, the cover being mountable in either a first position or a second position on the housing, such that when the cover is mounted in the first position, the lower extension closes off a first end of the cavity while a second end of the cavity remains open, and such that when the cover is mounted in the second position, the lower extension closes off the second end of the cavity while the first end remains open.

34. The power input assembly of claim 33, wherein the power conductor and the return conductor each pass through a base of the housing.

35. The power input assembly of claim 33, wherein the housing includes a base and opposing sidewalls extending from the base, the cavity being defined by the base, the opposing sidewalls, and the cover.

36. The power input assembly of claim 35, wherein the housing includes a mounting tab projecting outward from the base.

37. A power input assembly comprising:

a housing including a cavity, the cavity defined by opposing sidewalls, a base and a removable cover, the cavity having a first open end and an opposite second open end;

the cavity including a longitudinally extending power chamber and a longitudinally extending return chamber;

first and second power conductor posts located within the power chamber of the cavity, the power conductor posts being adapted for connection to a power terminal of an electrical power source, and first and second return conductor posts located within the return chamber of the cavity, the return conductor posts being adapted for connection to a return terminal of the electrical power source;

the cover having a lower extension and being mountable in either a first position or a second position on the housing, such that when the cover is mounted in the first position the lower extension closes off the first open end of cavity and the second open end of the cavity remains open, and when the cover is mounted in the second position the lower extension closes off the second open of the cavity and the first open end remains open.

38. The power input assembly of claim 37, wherein the opposing sidewalls extend outward from the base.

* * * * *

UNITED STATES PATENT AND TRADEMARK OFFICE

CERTIFICATE OF CORRECTION

PATENT NO. : RE41,662 E
APPLICATION NO. : 11/583876
DATED : September 14, 2010
INVENTOR(S) : Schomaker et al.

It is certified that error appears in the above-identified patent and that said Letters Patent is hereby corrected as shown below:

Col. 12, line 26, claim 37: "off the second open" should read --off the second open end--

Signed and Sealed this
Eighth Day of March, 2011

David J. Kappos

David J. Kappos
Director of the United States Patent and Trademark Office