Feb. 13, 1962 J. H. HOPKINS ET AL 3,021,503

TERMINAL MEANS

Original Filed Aug. 13, 1959

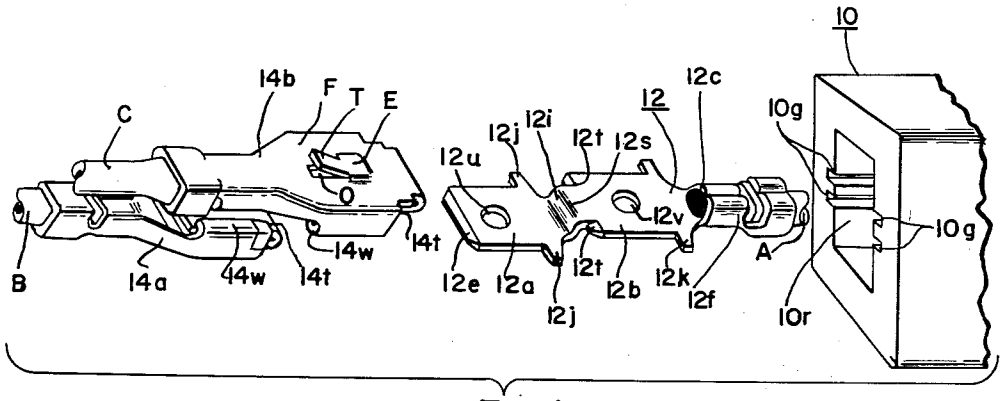

Fig. 1

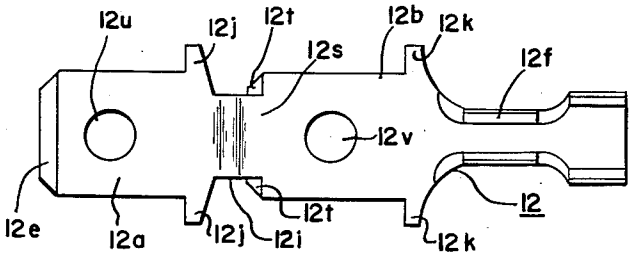

Fig. 2

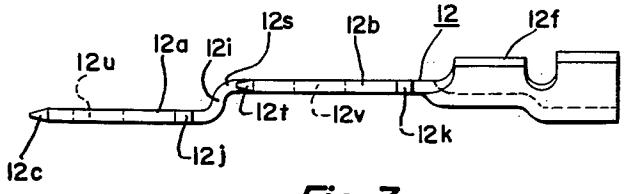

Fig. 3

INVENTORS.
Joseph H. Hopkins
Allan S. Van Slyke

BY

Albert W. Reuther

Their Attorney

United States Patent Office 3,021,503 Patented Feb. 13, 1962

3,021,503

TERMINAL MEANS

Joseph H. Hopkins, Warren, and Allan S. Van Slyke, Phalanx Station, Ohio, assignors to General Motors Corporation, Detroit, Mich., a corporation of Delaware

Original application Aug. 13, 1959, Ser. No. 833,449, now Patent No. 2,989,723, dated June 20, 1961. Divided and this application Dec. 5, 1960, Ser. No. 79,101
4 Claims. (Cl. 339—213)

This invention relates to electrical connectors, and particularly to terminals adapted to facilitate connection therewith relative to multiple mating terminal means.

This is a divisional application of a co-pending application, S.N. 833,449, filed August 13, 1959, now Patent 2,989,723—Hopkins et al., having an issue date of June 20, 1961, and belonging to the assignee of the present invention.

An object of this invention is to provide new and improved terminal means having structural features to facilitate connection therewith relative to multiple mating terminal means.

Another object of this invention is to provide male terminal means having increased stability relative to an insulating housing and adapted to facilitate connection involving multiple terminal mating means.

Another object of this invention is to provide terminal means having multiple stabilizing portions remote from each other and adapted to facilitate connection involving multiple mating terminal means.

A further object of this invention is to provide electrical terminal means having multiple longitudinally-spaced stabilizing tabs in other than planar relation to each other whereby wobbling of the terminal means relative to a mounting housing therefor is minimized so as to facilitate connection involving multiple mating terminal means.

Another object of this invention is to provide a tandem-male-blade terminal means including a pair of laterally off-set and longitudinally-spaced male blade portions interconnected by a relatively narrower intermediate tongue portion adapted to permit longitudinal sliding engagement of each male blade portion relative to a similar though separate mating female terminal means each having side wings curled to engage opposite surfaces of the male blade portions, each male blade portion having stabilizing tabs projecting laterally thereof and one end of the male terminal means having an integral ferrule portion adapted to engage an electrical conductor.

Further objects and advantages of the present invention will be apparent from the following description, reference being had to the accompanying drawings wherein preferred embodiments of the present invention are clearly shown.

In the drawings:

FIG. 1 is a perspective exploded view of one embodiment of terminal means for a connector in accordance with the present invention.

FIG. 2 is a plan view of terminal means in accordance with the present invention.

FIG. 3 is a side elevational view of terminal means in accordance with the present invention.

The exploded view of FIG. 1 includes an illustration of an end fragment of an insulating body or housing generally indicated by numeral **10**. The fragment of the housing **10** illustrated in perspective shows inner wall portions forming a longitudinal recess **10***r* and having a pair of laterally outwardly extending grooves **10***g* extending parallel to each other in opposite wall portions. A tandem male-blade terminal means generally indicated by numeral **12** and shown in FIGS. 1, 2 and 3 is adapted

to be fitted into insulating body **10**. The tandem or double male blade terminal means **12** includes a ferrule portion **12***f* adapted to be crimped into electrical engagement with an insulated conductor **12***c*. The double male-blade terminal means **12** includes a first male-blade portion **12***a* and a second male-blade portion **12***b* interconnected by a tongue portion or narrow intermediate interconnecting portion **12***i*. The interconnecting portion **12***i* is appreciably narrower in width than the first and second male-blade portions **12***a* and **12***b*.

A female terminal means indicated by numeral **14***a* in FIG. 1 is adapted to engage the first male-blade portion **12***a*. As disclosed in Patent 2,682,038—Johnson, assigned to the assignee of the present invention, the female terminal means includes a ferrule portion, a tongue portion such as **14***t* and a pair of side wings such as **14***w*. The side wings and tongue are adapted to engage the first male-blade portion **12***a*. A second female terminal means **14***b* is also shown in FIG. 1 in an upside-down position relative to female terminal means **14***a* such that a pair of wings **14***w* and a tongue **14***t* of the second female terminal means **14***b* can engage the second male-blade portion **12***b*. It is to be noted that each of the female terminals has a pair of wings **14***w* and that these wings are laterally spaced from each other a distance slightly greater than the width of the intermediate terminal portion **12***i* of the tandem male-blade terminal means **12** in accordance with the present invention. Thus the female terminal means are longitudinally slidable into engagement with the first and second male-blade portions **12***a* and **12***b*.

The first male-blade portion **12***a* is provided with a coined or pointed leading edge **12***e* that facilitates engagement of the female terminal means relative to the first male-blade portion **12***a*. This coined edge **12***e* can be beveled on each of opposite sides so as to facilitate engagement relative to both the tongue portion **14***t* and side wings **14***w* of the first female terminal means **14***a*.

The second male-blade portion **12***b* is provided with a pair of tapered corner or end portions **12***t* located laterally on opposite sides of the intermediate portion **12***i*. These tapered portions **12***t* are adapted to facilitate engagement of wing portions **14***w* of the second female terminal means **14***b*. The tongue portion **14***t* of the second female terminal means **14***b* is adapted to be engaged by an arcuate or curved surface **12***s* on one side of the intermediate portion **12***i*. The first and second male-blade portions **12***a* and **12***b* are provided with apertures or depressed areas **12***u* and **12***v* respectively such that a pimple or embossed portion (not shown) of each of the tongue portions **14***t* permit locking engagement of the female terminals positively relative to each of the tandem male-blade portions.

The tandem male-blade terminal means in accordance with the present invention is further provided with laterally outwardly extending projections **12***j* and **12***k* integral with first and second male-blade portions **12***a* and **12***b* respectively. These projections **12***j* and **12***k* are adapted to slide into engagement with the grooves **10***g* of the insulating body **10**. The projections **12***j* fit into a lower pair of grooves in opposite wall portions of the insulating body and the projections **12***k* fit into an upper pair of the grooves in the insulating body. Due to the fact that the projections **12***j* and **12***k* are located in parallel relation to each other, it is possible to maintain parallel alignment of the tandem male-blade terminal means **12** relative to recess **10***r* in the insulating body as the projections engage the grooves **10***g*. The projections **12***j* and **12***k* are grouped in pairs lying in planes parallel to each other and having a predetermined spacing fixed by the intermediate portion **12***i*. The projections **12***j* and and **12***k* establish stability of the tandem male-blade terminal means **12** relative to the insualting body **10** and

parallel relation of the first and second male-blade portions **12***a* and **12***b* is maintained by the intermediate portion **12***i* such that female terminal means **14***a* and **14***b* respectively can be properly fitted into engagement with the separate first and second male-blade portions in spaced parallel relationship. As a result of the structure illustrated in FIG. 1, a three-way connection can be established between conductors A, B, and C which are suitably attached by crimping to the double male-blade terminal means **12**, and the female terminal means **14***a* and **14***b* respectively. The intermediate portion **12***i* maintains lateral spacing of the first and second male-blade portions and also maintains longitudinal alignment of the first and second male-blade portions. The projections **12***j* and **12***k* in addition to providing lateral stabilization of the tandem male-blade terminal means **12** relative to the grooves of the insulating body **10** also provide stops to limit insertion of the female terminal means **14***a* and **14***b* respectively. The wing portions **14***w* can have tapered or coined leading edges engageable relative to the projections **12***j* and **12***k*.

It is to be noted that the female terminal means such as **14***a* and **14***b* can be also mounted in insulating housings complementary to recess **10***r* of the insulating body **10**. The female terminal means **14***b* is provided with an embossed portion E swaged or deformed laterally to one side of a floor F of the female terminal means **14***b*. A tang T is integral at one end with the embossed portion E and the tang is cut from the floor F such that an opening O is left therein. The embossed portion E can be slightly wider than the tang and is therefore at least partially in longitudinal alignment with the tang T and opening O. The opening O remains in the floor F and the tang T can be deformed or deflected relative to the floor without hinderance by engagement of outer free edges of the tang relative to edges of the opening O because the embossed portion E maintains a predetermined spacing of the tang T relative to the floor. Thus the tang T can be deformed or deflected temporarily for insertion and/or removal relative to an insulating body as shown in the Patent 2,682,038—Johnson, mentioned earlier. The embossed portion E and tang T represent structure which is an improvement over that shown by Patent 2,682,038.

The tandem male-blade terminal means **12**, in accordance with the present invention, permits establishment of a three-way connection in a minimum of space relative to female terminal means that can be easily attached and detached relative to first and second male-blade portions **12***a* and **12***b*. The projections **12***j* and **12***k* in pairs parallel to each other enhance lateral stability such that proper alignment of the male-blade portions is maintained relative to female terminal means longitudinally slidable into engagement therewith.

Also it is to be understood that the tandem male-blade terminal means **12** shown in FIGS. 1, 2 and 3 can be insulated by a suitable covering and/or a wrapping of insulating tape in place of the insulating body **10**. Whenever the tandem male-blade means is insulated by a sleeve or wrapping, the pairs of laterally outwardly extending projections or tabs **12***j* and **12***k* serve as stops or abutments to limit engaging movement of female terminals such as shown in FIG. 1 relative to first and second male blade portions **12***a* and **12***b*.

While the embodiments of the present invention as herein disclosed constitute preferred forms, it is to be understood that other forms might be adopted.

What is claimed is as follows:

1. An electrical terminal means for attachment to an electrical conductor, comprising, a ferrule portion adjacent to one end of said terminal means and adapted to be crimped into engagement with an end of the conductor, a first male-blade portion provided adjacent to an opposite end of said terminal means, a second male-blade portion provided in-between and in longitudinal alignment with both said ferrule portion and said first male-blade portion, and an intermediate terminal portion laterally interconnecting said first and second male-blade portions and longitudinally in alignment therewith, each male-blade portion having a pair of opposite laterally-outwardly extending projections such that planar stability is maintained against wobble in any direction relative to an insulating housing for said terminal means.

2. The terminal means of claim 1 wherein said intermediate terminal portion has a width less than that of said first and second male-blade portions that are positively maintained in spaced apart parallel planes and available for connection thereto by female terminals.

3. The terminal means of claim 1 wherein said first male-blade portion has a coined free edge and said intermediate terminal portion has a width less than that of said first and second male-blade portions such that said second male-blade portion has tapered corners adjacent to said intermediate terminal portion, said coined edge and said tapered corners being adapted to facilitate engagement thereof relative to female terminals engageable longitudinally relative to both said first and second male-blade portions in alignment with each other.

4. Electrical connector means for conductors, comprising, a housing of insulating material having a passage therethrough including two pairs of laterally-outwardly extending grooves opposite and parallel to each other, dual male-blade terminal means having first and second male-blade portions laterally-offset and longitudinally spaced relative to each other, a ferrule portion adapted to be crimped into engagement with an end of a conductor as well as in intermediate terminal portion interconnecting said first and second male-blade portions, and one pair of laterally-outwardly extending projections located transversely relative to a plane longitudinal in alignment with a longitudinal axis through said first and second male-blade portions and each adapted to fit into engagement with a groove in said housing relative to which said projections anchor and stabilize said dual male-blade terminal means.

No references cited.