US 20120133190A1

(19) United States

(12) Patent Application Publication

(10) Pub. No.: US 2012/0133190 A1

(43) Pub. Date: May 31, 2012

Pao

(54) **AIR INFLATABLE RECLINING SHAMPOO CHAIR**

(76) Inventor: **Jui-Lin Pao**, Kaohsiung (TW)

(21) Appl. No.: **12/954,708**

(22) Filed: **Nov. 26, 2010**

Publication Classification

(51) **Int. Cl.**

A47C 4/54 (2006.01)

A47C 7/54 (2006.01)

(52) **U.S. Cl.** **297/411.46**; 297/452.41; 297/411.2

(57) **ABSTRACT**

A reclining shampoo chair includes an air inflatable inclined main body comprising a head, a tail, a curved member extending the head to terminate at top of a rear surface of the main body, and at least one air inflation valve; and a horizontal support formed with the tail. The main body further includes a plurality of parallel air bladders of convex surface communicating with each other.

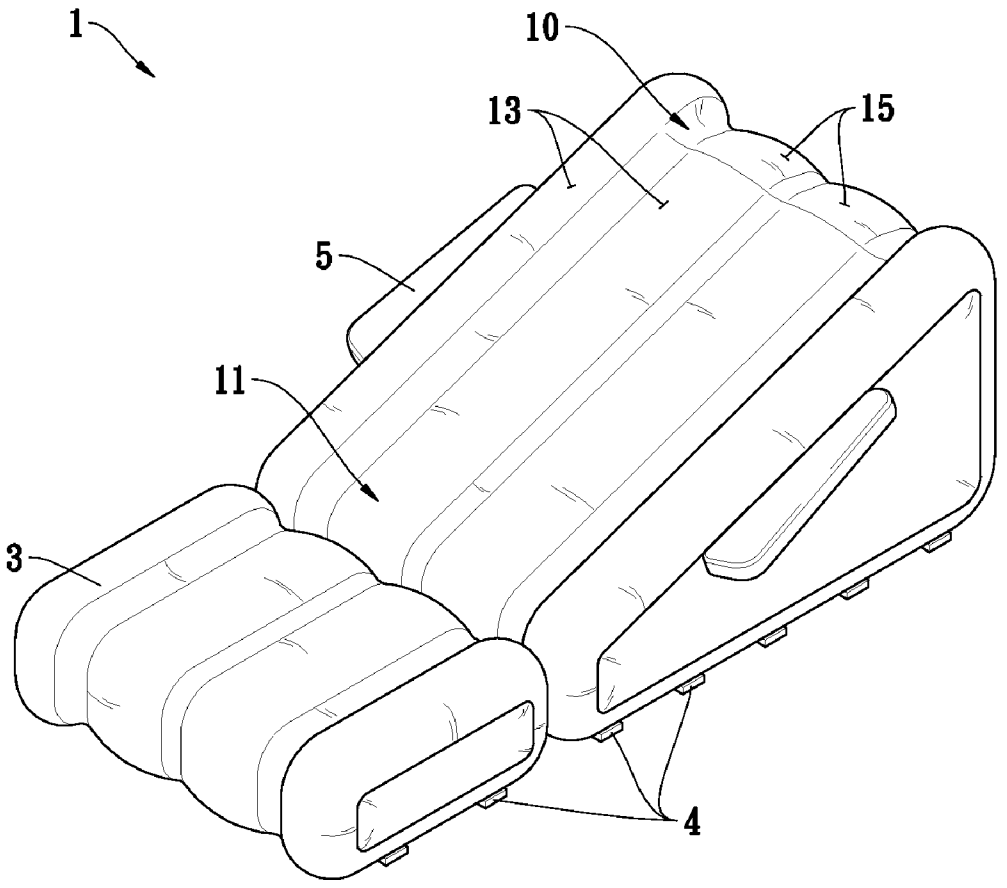

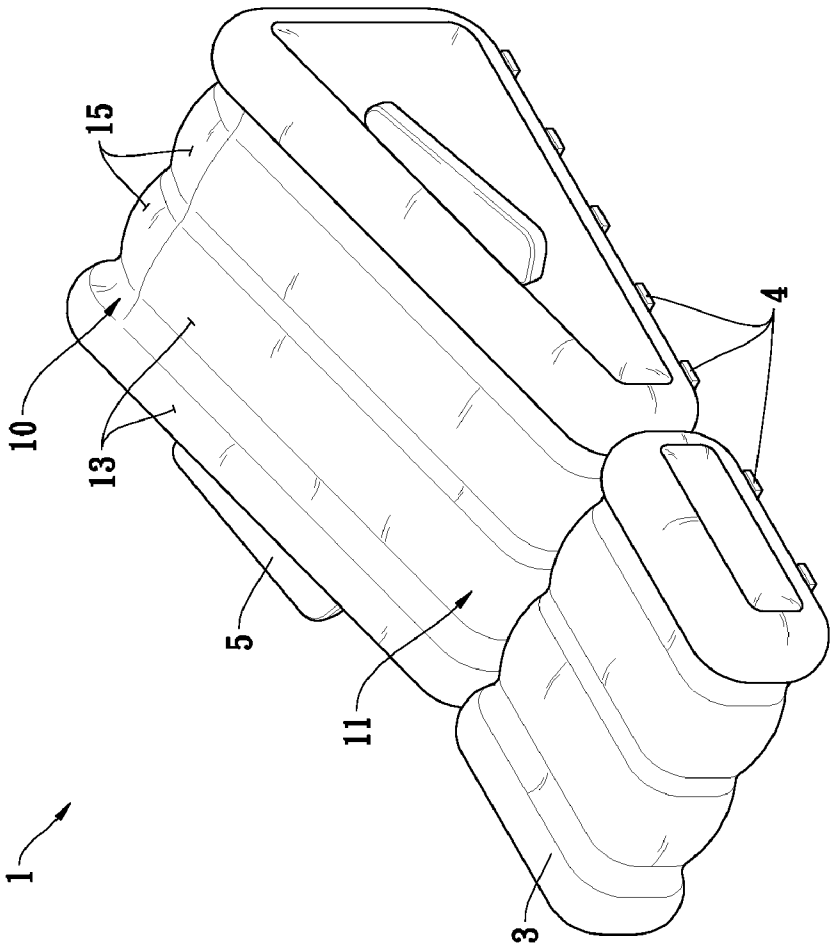

FIG. 1

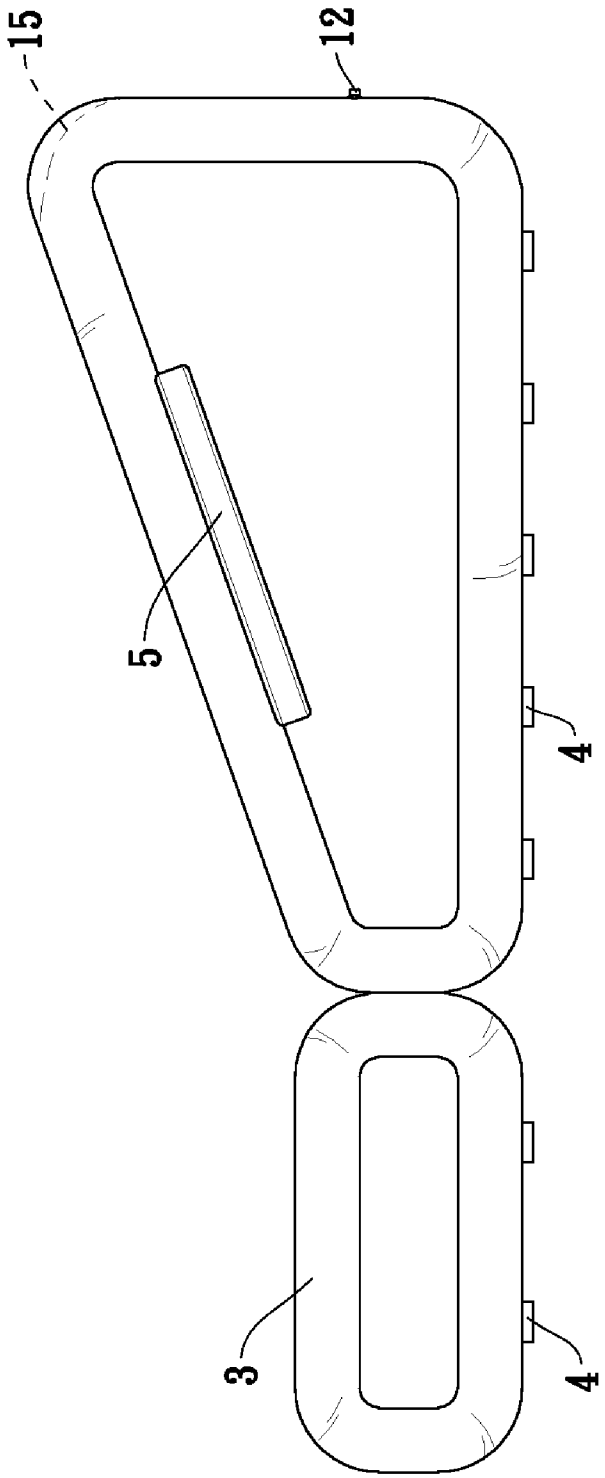

FIG. 2

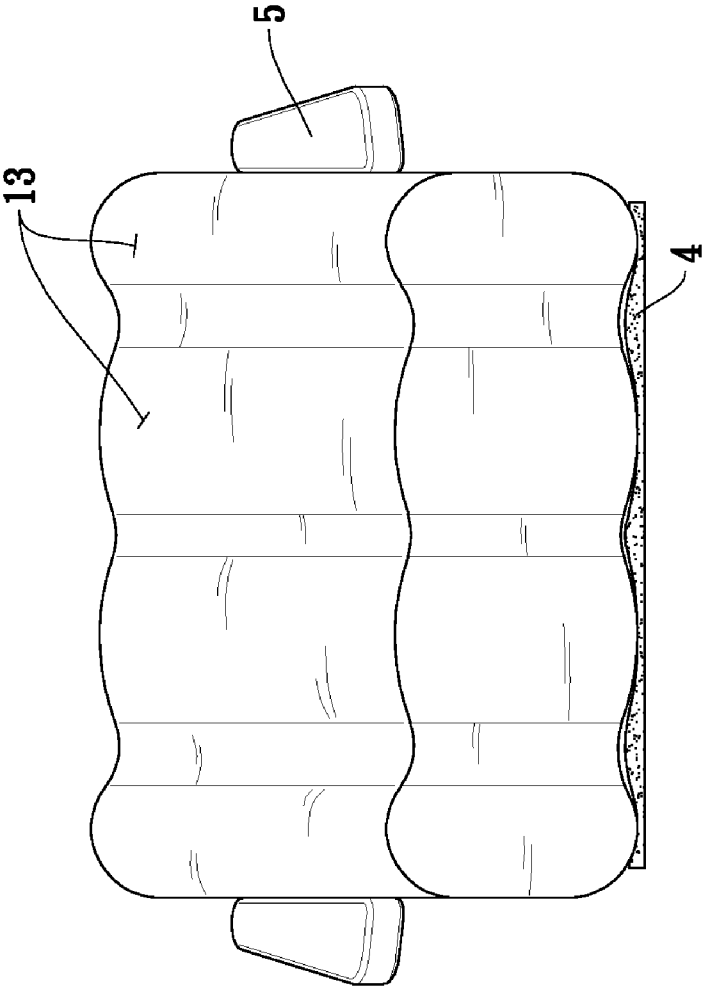

FIG. 3

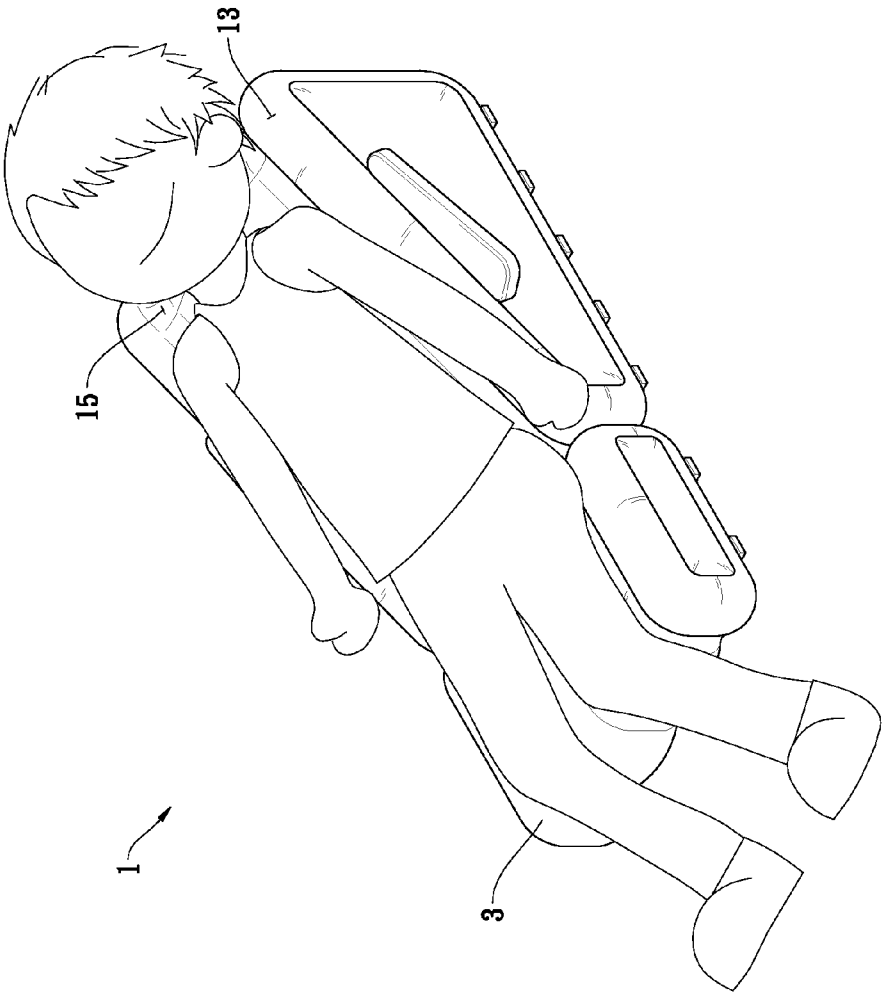

FIG. 4

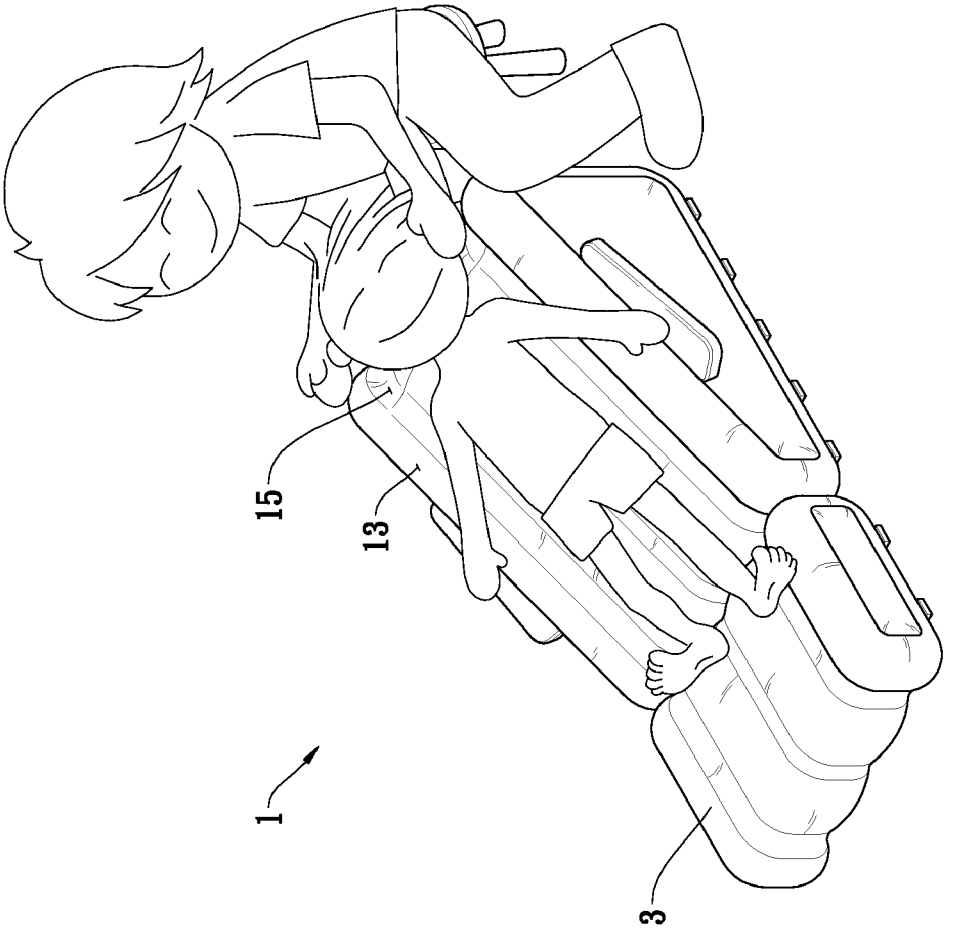

FIG. 5

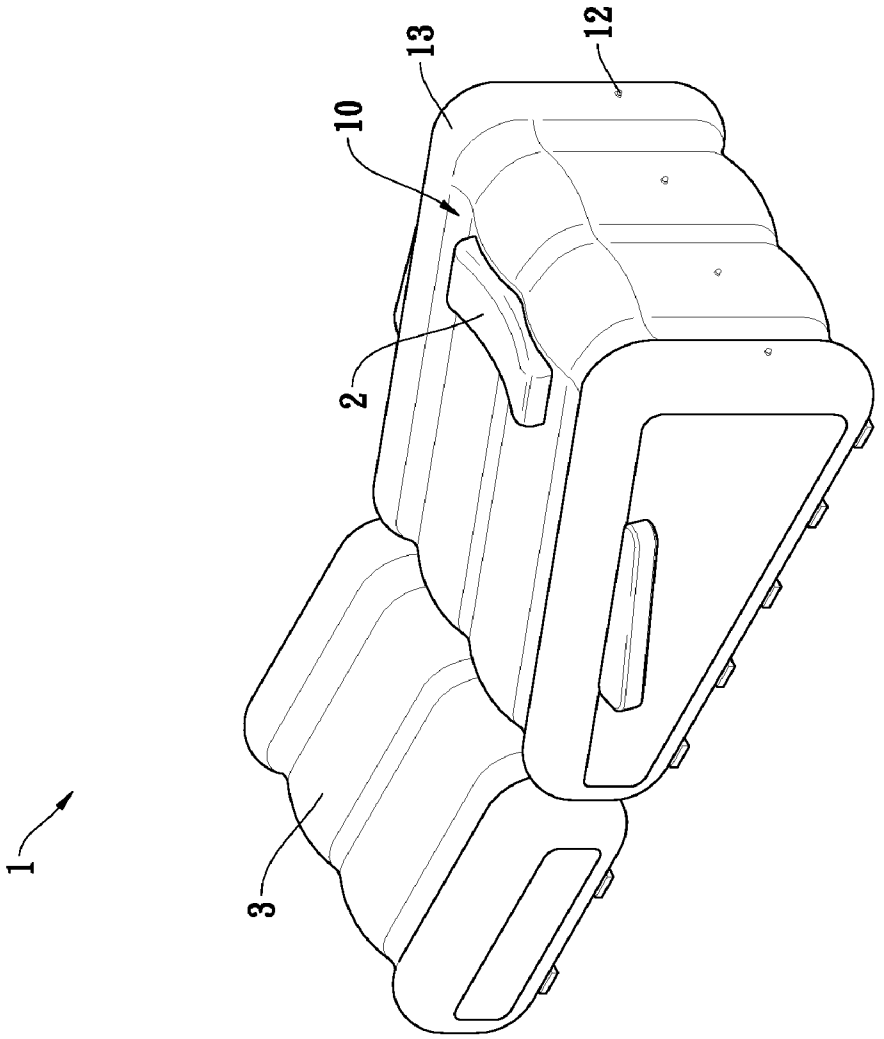

FIG. 6

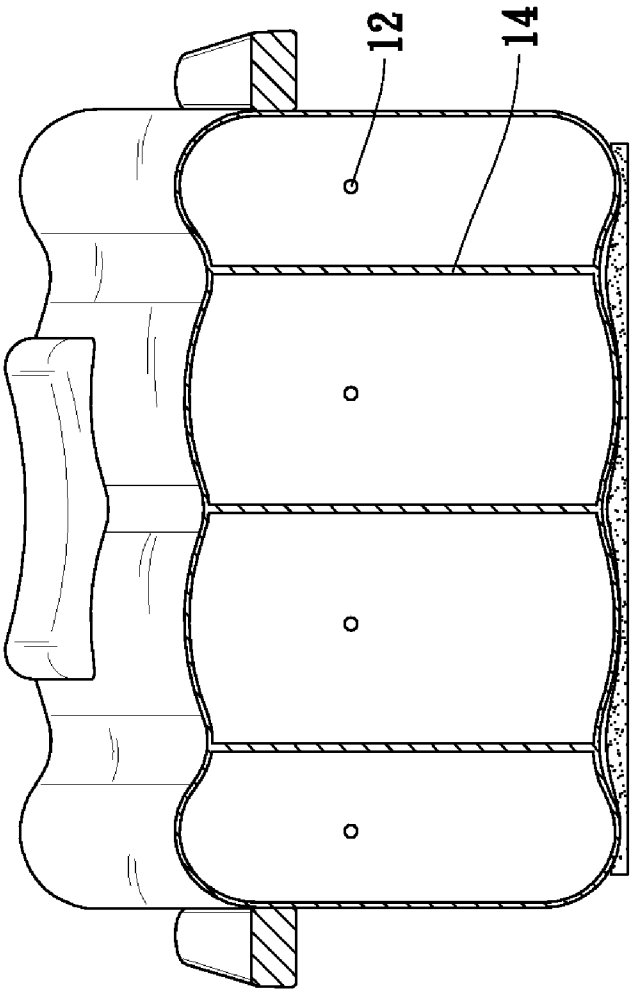

FIG. 7

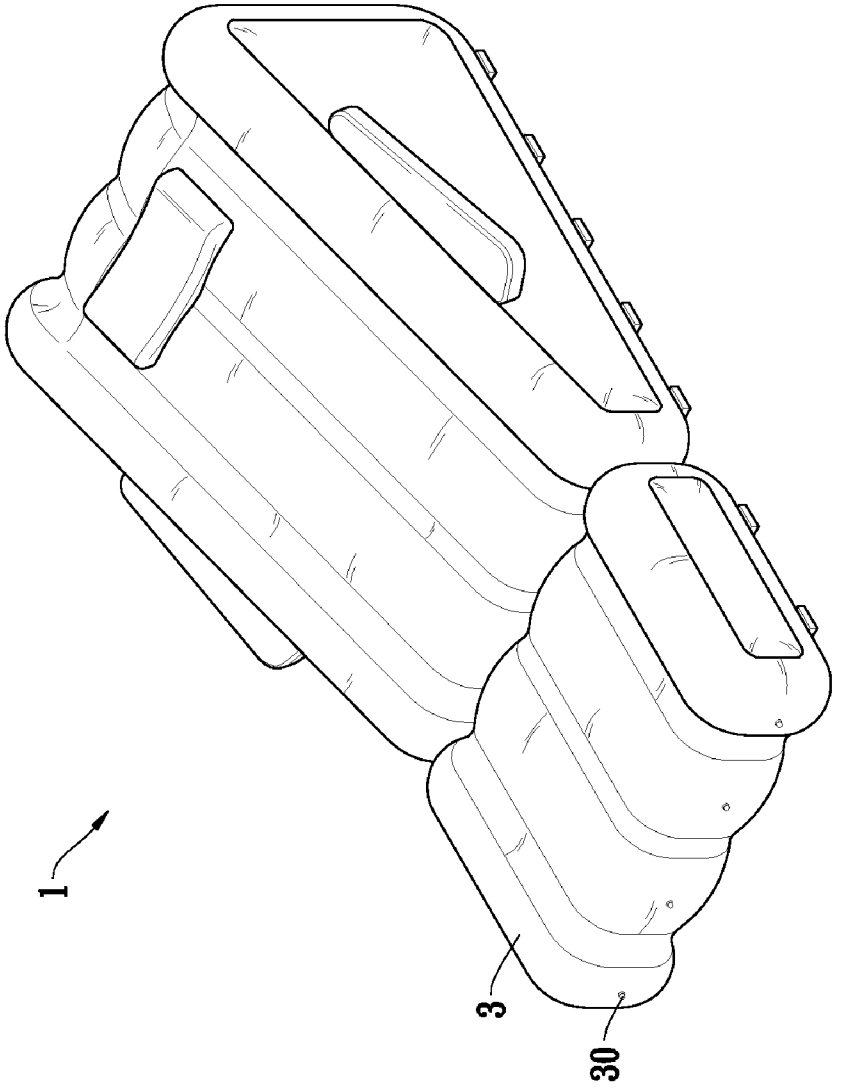

FIG. 8

AIR INFLATABLE RECLINING SHAMPOO CHAIR

BACKGROUND OF THE INVENTION

[0001] 1. Field of Invention

[0002] The invention relates to reclining chairs and more particularly to an air inflatable reclining shampoo chair for both adults and children.

[0003] 2. Description of Related Art

[0004] A person may sit on a chair in front of a sink and bend the head over the top of the sink prior to shampooing. However, water and bubbles generated by the shampoo when mixing with water may enter the eyes to cause irritation and/or enter the nose to block breathing. This occurs more frequently with children. Thus, many children are afraid of shampooing.

[0005] For ease of shampooing, a wide variety of reclining chairs are commercially available. However, many of them are fixed in shape. This can occupy precious living space in the home. Thus, the need for improvement still exists.

SUMMARY OF THE INVENTION

[0006] It is therefore one object of the invention to provide a reclining shampoo chair comprising an air inflatable inclined main body comprising a head, a tail, a curved member extending from the head to terminate at a top of a rear surface of the main body, and at least one air inflation valve; and a horizontal support formed with the tail.

[0007] The above and other objects, features and advantages of the invention will become apparent from the following detailed description taken with the accompanying drawings.

BRIEF DESCRIPTION OF THE DRAWINGS

[0008] FIG. **1** is a perspective view of an air inflatable reclining shampoo chair according to a first preferred embodiment of the invention;

[0009] FIG. **2** is a side elevation view of FIG. **1**;

[0010] FIG. **3** is a front end view of FIG. **1**;

[0011] FIG. **4** is a perspective view showing an adult resting on the chair;

[0012] FIG. **5** is a perspective view showing a child resting on the chair with an adult sitting beside the child;

[0013] FIG. **6** is a perspective view of an air inflatable reclining shampoo chair according to a second preferred embodiment of the invention;

[0014] FIG. **7** is a longitudinal cross-sectional view of the main body of FIG. **6**; and

[0015] FIG. **8** is a perspective view of an air inflatable reclining shampoo chair according to a third preferred embodiment of the invention.

DETAILED DESCRIPTION OF THE INVENTION

[0016] Referring to FIGS. **1** to **5**, an air inflatable reclining shampoo chair in accordance with a first preferred embodiment of the invention comprises the following components as discussed in detail below.

[0017] A main body **1** is formed of rubber and has an inclined surface (i.e., having a substantially triangular longitudinal cross-section). The main body **1** comprises a plurality of parallel air bladders **13** on its inclined surface facing upward. Each air bladder **13** has a convex surface. The inclined surface of the main body **1** formed by the air bladders **13** has two upward projecting sides. That is, the inclined surface of the main body **1** has a longitudinal U-shaped cross-section. Internal regions of the air bladders **13** communicate each other. Upper ends of the air bladders **13** are formed as a head **10** and lower ends thereof are formed as a tail **11**. A curved member **15** is extended from the upper end of each air bladder **13** to terminate at top of a rear surface of the main body **1**. A laterally projecting arm rest **5** is formed at either side of the main body **1** (i.e., at either side of the air bladders **13**). The arm rests **5** are stuffed with cotton, synthetic fibers, etc. so as to be relatively firm. At least one (one is shown) air inflation valve **12** is formed on the rear surface of the main body **1**. A plurality of glides **4** are formed on the bottom of the main body **1**.

[0018] A horizontal support **3** is formed with the tail **11**. The internal region of the horizontal support **3** communicates with that of the main body **1**. That is, inflation of the main body **1** by air will also inflate the horizontal support **3**. The horizontal support **3** is adapted to support the legs and/or the buttocks. A plurality of glides **4** are formed on the bottom of the horizontal support **3**.

[0019] Referring to FIG. **4** specifically, an adult is shown resting upon the reclining shampoo chair. It is seen that a lower portion of the head of the adult is supported by the curved members **15**, the torso thereof rests upon both the main body **1** and the horizontal support **3**, and the legs thereof are supported by the ground. Thus, another individual may easily shampoo the hair of the adult.

[0020] Referring to FIG. **5** specifically, a child is shown resting upon the reclining shampoo chair. It is seen that a lower portion of the head of the child is supported by the curved members **15**, the remaining parts thereof rest upon both the main body **1** and the horizontal support **3**, and both hands thereof rest upon the arm rests **5**. Thus, an adult may easily shampoo the hair of the child.

[0021] The reclining shampoo chair can be installed easily and quickly by pumping air thereinto prior to use. Similarly, it can be deflated and folded into a compact form for saving storage space when not in use.

[0022] Referring to FIGS. **6** and **7**, an air inflatable reclining shampoo chair in accordance with a second preferred embodiment of the invention is shown. The characteristics of the second preferred embodiment are substantially the same as those of the first preferred embodiment except for the following: A plurality of diaphragms **14** are provided, each between two adjacent air bladders **13** for fluidic separation purposes. Each air bladder **13** can be inflated by a corresponding air inflation valve **12**. A substantially rectangular, hollow head rest **2** is provided on the inclined surface of the main body **1** proximate to the curved members **15**. The head rest **2** is also inflatable and is made of the same material as the main body **1**. The internal region of the head rest **2** communicates with that of the air bladder **13**. Thus, inflation of the air bladders **13** also inflates the head rest **2**.

[0023] Alternatively, the head rest **2** can be stuffed with cotton, synthetic fibers, etc. so as to be relatively firm.

[0024] It is envisaged that the head of an individual can be supported by the head rest **2** in a comfortable manner by resting upon both the main body **1** and the horizontal support **3** when shampooing.

[0025] Referring to FIG. **8**, an air inflatable reclining shampoo chair in accordance with a third preferred embodiment of the invention is shown. The characteristics of the third preferred embodiment are substantially the same as those of the

second preferred embodiment except for the following: The internal region of the main body **1** does not communicate with that of the horizontal support **3**. Thus, a plurality of air inflation valves **30** are provided on the horizontal support **3**.

[0026] While the invention has been described in terms of preferred embodiments, those skilled in the art will recognize that the invention can be practiced with modifications within the spirit and scope of the appended claims.

What is claimed is:

1. A reclining chair comprising:

an air inflatable inclined main body (**1**) comprising a head (**10**), a tail (**11**), a curved member (**15**) extending the head (**10**) to terminate at a top of a rear surface of the main body (**1**), and at least one air inflation valve (**12**); and

a horizontal support (**3**) formed with the tail (**11**).

2. The reclining chair of claim **1**, wherein the main body (**1**) further comprises a plurality of parallel air bladders (**13**) communicating with each other.

3. The reclining chair of claim **2**, wherein the air bladders (**13**) have a longitudinal U-shaped cross-section.

4. The reclining chair of claim **2**, wherein the main body (**1**) further comprises a plurality of diaphragms (**14**) each formed between any two adjacent air bladders (**13**) for separation, and wherein the at least one air inflation valve comprises a plurality of air inflation valves (**1**) each formed on a surface of the air bladder (**13**).

5. The reclining chair of claim **1**, further comprising a plurality of glides (**4**) disposed on a bottom of each of the main body (**1**) and the horizontal support (**3**).

6. The reclining chair of claim **1**, further comprising a head rest (**2**) disposed on the head (**10**) of the main body (**1**).

7. The reclining chair of claim **6**, wherein the head rest (**2**) is air inflatable.

8. The reclining chair of claim **6**, wherein the head rest (**2**) is stuffed.

9. The reclining chair of claim **1**, wherein the horizontal support (**3**) is air inflatable.

10. The reclining chair of claim **1**, wherein the main body (**1**) further comprises two arm rests (**5**) disposed respective sides.

11. The reclining chair of claim **10**, wherein the arm rests (**5**) are stuffed.

* * * * *