Sept. 10, 1963 S. I. KOHEN ETAL 3,103,012

STAPLING DEVICE

Filed April 21, 1961 4 Sheets-Sheet 1

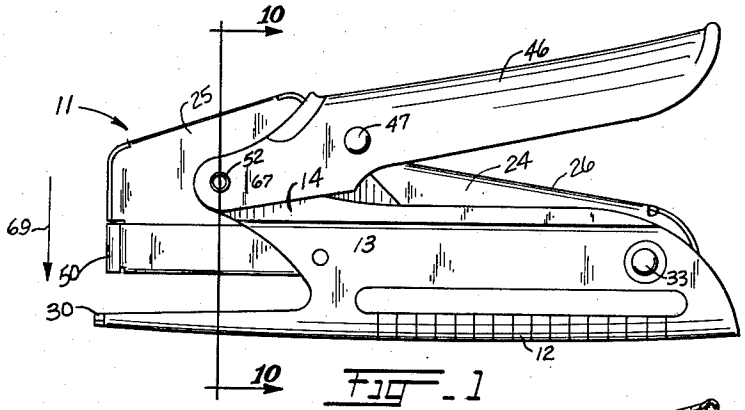

Fig. 1

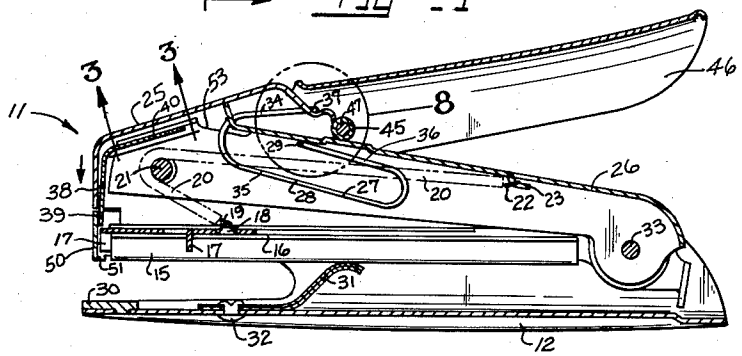

Fig. 2

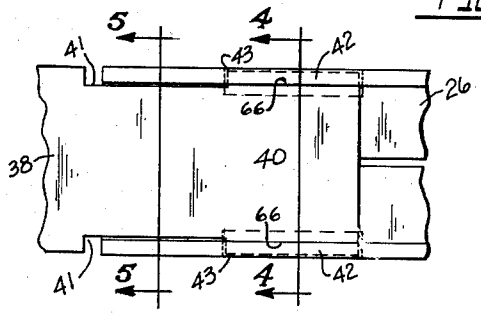

Fig. 3

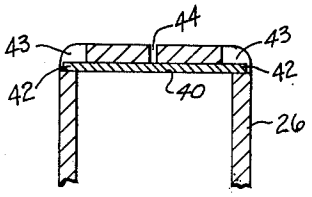

Fig. 4

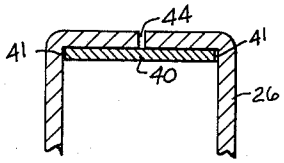

Fig. 5

INVENTORS
HENRY RUSKIN
SHELDON I. KOHEN

BY J. Walton Bade

ATTORNEY

Sept. 10, 1963 S. I. KOHEN ETAL 3,103,012

STAPLING DEVICE

Filed April 21, 1961 4 Sheets-Sheet 2

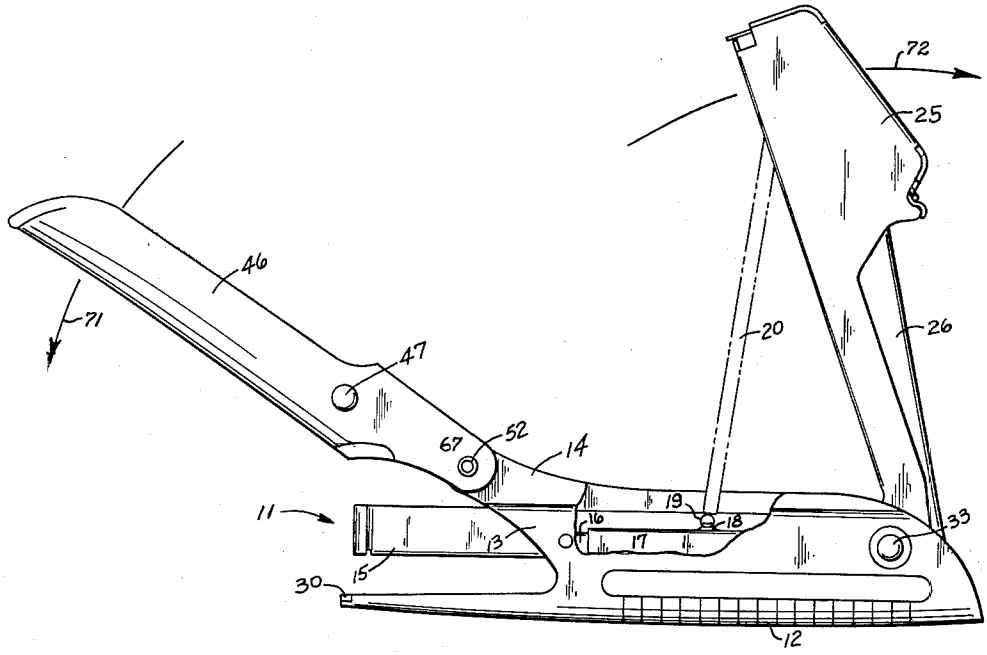

Fig. 6

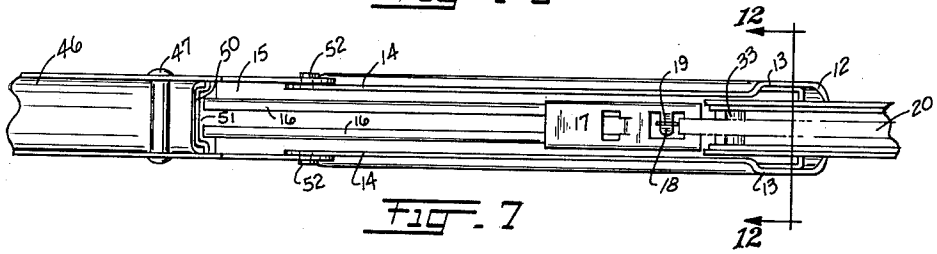

Fig. 7

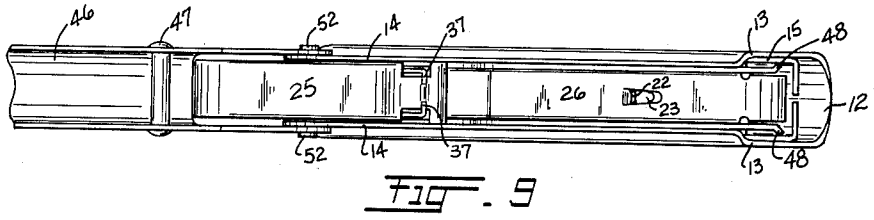

Fig. 9

INVENTORS
HENRY RUSKIN
SHELDON I. KOHEN

BY J. Walk Bucks

ATTORNEY

Sept. 10, 1963 S. I. KOHEN ETAL 3,103,012

STAPLING DEVICE

Filed April 21, 1961

4 Sheets-Sheet 3

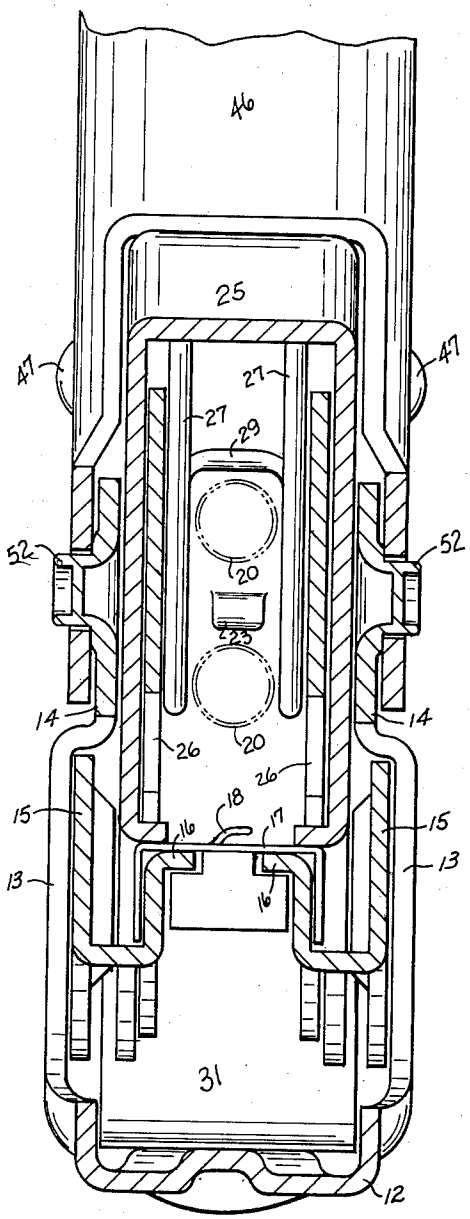

Fig. 10

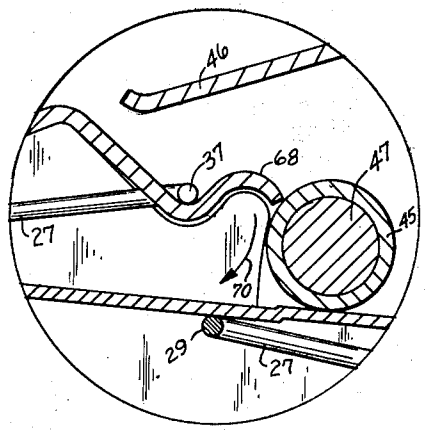

Fig. 8

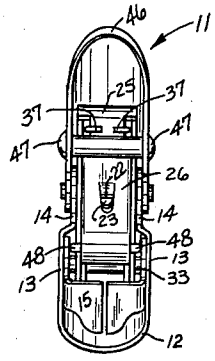

Fig. 11

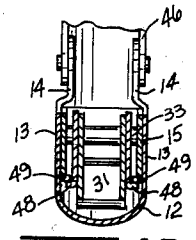

Fig. 12

INVENTORS
HENRY RUSKIN
SHELDON I. KOHEN

BY J. Walton Bradley

ATTORNEY

Sept. 10, 1963 S. I. KOHEN ETAL 3,103,012

STAPLING DEVICE

Filed April 21, 1961 4 Sheets-Sheet 4

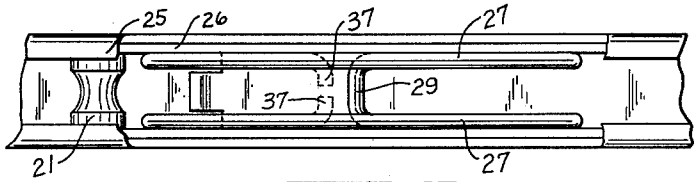

Fig. 13

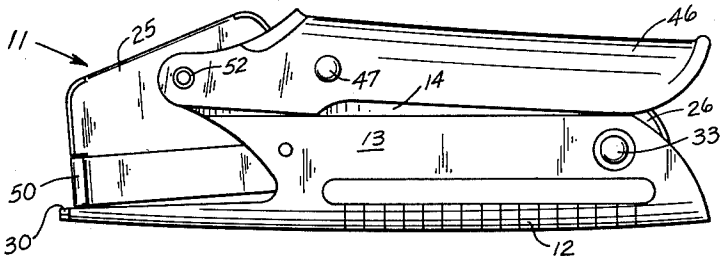

Fig. 14

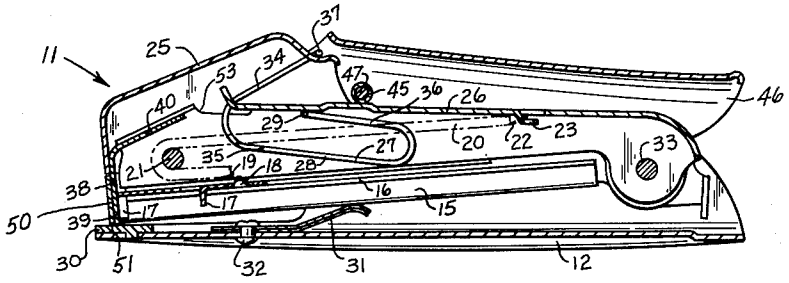

Fig. 15

INVENTORS
HENRY RUSKIN
SHELDON I. KOHEN

BY J. Walton Bader

ATTORNEY

United States Patent Office 3,103,012 Patented Sept. 10, 1963

3,103,012

STAPLING DEVICE

Sheldon I. Kohen, Flushing, and Henry Ruskin, Bayside, N.Y., assignors to Swingline Inc., Long Island City, N.Y., a corporation of New York

Filed Apr. 21, 1961, Ser. No. 115,062
12 Claims. (Cl. 1—3)

This invention relates to a stapling device having a number of novel features. The novel features of this invention when collectively employed, are particularly applicable to that type of stapling device known as a stapling plier. These features, however, may also be individually employed.

The stapling device of this invention has a number of specific advantages over conventional devices, some of which will be briefly enumerated below:

(1) The magazine of the device is formed with an openable cover so that the staples may be conveniently dropped directly into the magazine and the follow block is automatically retractable.

(2) The actuator member of the stapling device of this invention is pivotally connected to the magazine and normally overlies the cover, which in turn is also pivotally connected to the magazine. Therefore, the device may be very easily loaded by simply swinging the actuator away from the cover and thereafter swinging the cover away from the magazine.

(3) The cover of the magazine is of novel construction and is formed with a support portion and a driving portion downwardly movable with respect to said support portion. Between the support portion and the driving portion a wire spring member is disposed which is in turn formed with a pair of reverse acute angular bends therein so as to permit proper action of the parts and, at the same time, permit proper employment of the space provided.

(4) The staple driver of the instant invention is formed with a holding portion and an operating portion. These portions are angularly disposed with respect to one another at an angle less than 180 degrees but more than 90 degrees so as to permit proper employment of space and effective operation of the device.

(5) Effective means are further provided to secure the stapling driver to the remainder of the device so as to permit proper employment of the parts.

(6) The construction of the instant application is simple and economical and can be manufactured with the employment of relatively unskilled labor.

Other objects and advantages of the instant invention will become apparent by a reading of the specification.

The invention may be briefly described as a stapling machine comprising staple holding means, staple advancing means therewithin, staple driving means overlying the staple holding means and actuatnig means operatively connected to the staple driving means.

In the preferred modification of this invention the staple holding means comprise a magazine which is preferably manufactured with a longitudinally disposed rail therewithin, the staple advancing means consist of a follower and spring means connected to the follower and to the cover. With this construction raising of the cover will cause the follower to move rearwardly and permit simple loading of the device. A cover is pivotally connected to the magazine and normally overlies the same and bears a staple driver at one end thereof. The actuating means, in the preferred modification, consist of an actuator member which is pivotally connected to the magazine and normally overlies the cover. The actuator and the cover are further provided with complementary latching means. The actuator may be pivoted away from the cover and

the cover thereafter pivoted away from the magazine in order to permit simple loading of the device.

Where the device of the instant invention is made in the form of a stapling plier, a base and an anvil thereupon are provided. The magazine is normally spaced from the base. A spring is secured to said base and intervenes the magazine and base.

The invention will be further described by reference to the accompanying drawings which are made a part of this specification.

FIG. 1 is a side view of a stapling plier made in accordance with this invention.

FIG. 2 is a side sectional view of the stapling device of FIG. 1.

FIG. 3 is a detail sectional view of the staple driving portion of the invention shown in FIG. 2 taken along lines 3—3 of FIG. 2.

FIG. 4 is a sectional view portion of the invention shown in FIG. 3 taken along lines 4—4 of FIG. 3.

FIG. 5 is a sectional view of the portion of the invention shown in FIG. 3 taken along lines 5—5 of FIG. 3.

FIG. 6 is a side view of the form of the invention shown in FIG. 1 but with the actuator disengaged from its normal position overlying the cover of the magazine and the cover of the magazine in turn shown in partially open position.

FIG. 7 is a plan view of the form of the invention shown in FIG. 6 with the cover thereof in fully open position.

FIG. 8 is a detail side view, on an enlarged scale, of the latching means which are used to hold the actuator in its normal position over the cover of the magazine of this invention.

FIG. 9 is a plan view of the invention shown in FIG. 1 but with the actuator removed from its normal position overlying the cover of the magazine and the cover of the magazine in closed position.

FIG. 10 is a sectional view of a portion of the inventon shown in FIG. 1 taken along lines 10—10 of FIG. 1.

FIG. 11 is a rear detail view of the stapling device of this invention showing a portion of the additional latching means provided.

FIG. 12 is a sectional view taken along lines 12—12 of FIG. 7.

FIG. 13 is a fragmentary bottom plan view of a portion of the cover of the stapling device of this invention. The coil spring has been removed for clarity of illustration.

FIG. 14 is a view similar to that of FIG. 1 but showing the stapling device of this invention in staple clinching position.

FIG. 15 is a view similar to that of FIG. 2 but showing the stapling device of this invention in staple clinching position.

Referring now to the specific form of the invention herein as set forth in the accompanying drawings for a detailed description thereof the stapling device 11 is formed with a base 12 having an anvil 30 thereupon. Base 12 also bears a pair of upwardly extending lateral magazine supporting portions 13 and the forward portions 14 of magazine support portions 13 are fuurther upwardly extending. A leaf spring 31 is secured to base 12 by rivet 32.

A magazine 15 is journaled at the rear of magazine support portions 13 of base 12 and is secured thereto by pin 33. Magazine 15 is open and has a longitudinally disposed rail 16 therewithin. A follower 17 is disposed upon rail 16 and bears a hook portion 18 thereupon. A coil spring 20 bears an eyelet 19 at one end thereof which is secured to portion 18 of follower 17. A cover 24 normally overlies magazine 15 and is also pivotally disposed with respect to magazine 15. Pin 33 holds the parts involved in proper relationship.

Cover 24 is formed with a support portion 25 and a driving portion 26. A spring 27 is formed with a pair of bifurcated lateral portions 28 which are connected to one another by transverse connecting portion 29 located at one end of spring 27. Spring 27 bears reverse angular portions 34, 35 and 36 which are located intermediate the end portions of spring 27. Connecting portion 29 of spring 27 bears against the underside driving portion 26 of cover 24 while the other end portion 37 of spring 27 extends through support portion 25 of cover 24 and is secured thereto.

A roller 21 is secured to support portion 25 of cover 24. Spring 20 is disposed about roller 21 and is also secured to hook 23 by eyelet 22. Hook 23 is disposed on the underside of driving portion 26 of cover 24.

A staple driver blade 38 is divided into an operating portion 39 and a holding portion 40. Holding portion 40 is laterally cut out on either side at 41 and thereafter bears laterally disposed extensions 42. Operating portion 39 and holding portion 40 of staple driver 38 are angularly disposed with respect to one another at an angle of less than 180 degrees but more than 90 degrees.

Extensions 42 of staple driver blade 38 are disposed in slots 43 which are formed within the forward portion of the driving portion 26 of cover 24. These slots 43 are formed by providing spaced overhanging portions 66 about driving portion 26.

In order to permit driver 38 to be inserted into slots 43 and to be held in position the upper part of portion 26 adjacent slots 43 is provided with an additional slot 44.

Support portion 25 of cover 24 bears an arcuate portion 68 which constitutes one portion of latching means. Actuator 46 also has lateral portions 67 at its forward end thereof and is pivotally connected to portions 14 of base 12. Actuator 46 also bears pin 47 to which roller 45 is rotatably connected. Roller 45 constitutes the other portion of the latching means and normally bears against arcuate portion 68 as shown in FIG. 8.

Cover 24 bears a pair of projections 48 at its rear portion thereof which in turn are adapted to abut against separable flanges 49 at the rear of magazine 15.

With the foregoing specific description the operation of the instant invention may now be explained.

The device is loaded with staples by moving cover 24 downwardly in the direction of the arrow 69 (FIG. 1). This movement causes roller 45 to clear arcuate portion 68 since arcuate portion 68 moves arcuately and downwardly as shown in FIG. 8 in the direction of the arrow 70.

Actuator 46 can then be moved pivotally in the direction of the arrow 71 shown in FIG. 6 to the position shown therein. Cover 24 can then be pivotally moved in the direction of the arrow 72 shown in FIG. 6 so as to expose magazine 15. The movement of cover 24 to its limit of travel causes projections 48 to bear against flanges 49 which, since flanges 49 are springable, holds cover 24 in open position. As can be seen from the instant specification, the pivotal movement of cover 24 also causes follower 17 to be moved rearwardly against spring 20.

Staples are thereafter loaded upon rail 16 and cover 24 pivotally moved to its normal position above magazine 15, thus disengaging projections 48 from flanges 49. It will be noted that this movement causes follower 17 to move forwardly until stopped by the staples (not shown) now disposed over rail 16. Actuator 46 is then moved to its normal position over cover 24 whereby the complementary portions 47 and 45 mesh together and cause a latching action to occur.

The device may now be used to apply staples to articles which are placed between anvil 30 and the forward portion 50 of magazine 15. Downward pressure on actuator 46 causes corresponding pressure on spring 31 and thereby brings the forward portion 50 of magazine 15 as close to anvil 30 as the material (not shown) disposed between said parts will permit. Further downward pressure of actuator 46 causes driving portion 26 of cover 24 to move downwardly in the direction of the arrow shown in FIG. 2. This downward movement compresses spring 27 and causes operating portion 39 of driving blade 38 to propel a staple (not shown) through staple discharge opening 51 in magazine 15, causing stapling to occur. During the downward movement of driving portion 26 of cover 24 support portion 25 remains in fixed position after magazine 15 abuts anvil 30.

The release of pressure on actuator 46 causes pressure to be released on springs 31 and 27, thereby causing the parts to assume their normal position. As is well known in the art, since follower 17 is spring loaded, an additional staple is then placed in position for further driving.

The parts of the instant invention are preferably assembled as follows:

Anvil 30 is staked to base 12 at its forward portion thereon. Rivet 32 is applied to spring 31 and base 12 so as to rivet the parts into position. Pin 47 is placed into position on actuator 46 and actuator 46 is thereafter riveted to portions 14 of base 12 by extrusions 52. Follower 17 is then slid on to rail 16. Magazine 15 is then placed into position between portions 13 of base 12. Driving portion 26 of cover 24 is thereafter obtained and holding portion 40 of staple driver 38 is slid into position into slots 43. Spring roller 21 is then assembled to portion 26. Spring 27 is then dropped through opening 53 in portion 26 with connected portion 29 dropped through first so that connected portion 29 bears against the inside of portion 26. Driving portion 26 is then slid within support portion 25 and end portion 37 of spring 27 is then snapped into position over the upper portion of support portion 25 so as to hold the parts in place. The entire assembly of the cover is then placed between the side portions of magazine 15 and all parts secured together by pin 33. Spring 20 is then disposed over roller 21 and secured into position upon hook 23.

The foregoing specific embodiments of the instant invention as set forth in the specification herein are for illustrative purposes and for purposes of example only. Various changes and modifications may obviously be made within the spirit and scope of this invention and would occur to those skilled in this art.

We claim:

1. A stapling machine comprising an open magazine having a staple discharge opening, staple supporting means and a movable follower therewithin, a pivotally movable cover normally overlying said magazine, said cover having a support portion and a driving portion downwardly movable with respect to said support portion, a staple driver upon the driving portion of said cover engageable with said staple discharge opening, spring means secured to said cover and to said follower normally urging said follower toward said staple discharge means, a pivotally movable actuator overlying said cover, disengageable latching means upon said cover and said actuator, said actuator being movable away from said cover to permit opening of said magazine.

2. A stapling plier comprising a base, an anvil upon said base, an open magazine pivotally connected to said base and spaced therefrom, said magazine having a staple discharge opening at its forward end, staple supporting means therewithin, and a movable follower upon said staple supporting means, first spring means between said base and said magazine, a pivotally movable cover normally overlying said magazine, said cover having a support portion and a driving portion downwardly movable with respect to said support portion, a staple driver at the forward end of said cover movable within said staple discharge opening, second spring means secured to said cover and to said follower normally urging said follower toward said staple discharge opening, a pivotally movable actuator normally overlying said cover, disengageable latching means upon said cover and said actuator, said

actuator being movable away from said cover to permit opening of said magazine.

3. A stapling plier comprising a base, an anvil upon said base, an open magazine pivotally connected to said base and spaced therefrom, said magazine having a rail longitudinally disposed therewithin and a staple discharge opening at its forward end, a movable follower upon said rail, first spring means between said base and said magazine, a pivotally movable cover normally overlying said magazine, said cover having a support portion and a driving portion downwardly movable with respect to said support portion, second spring means secured to said cover and to said follower normally urging said follower toward said staple discharge opening, said cover also having a support portion and a driving portion, a staple driver secured to the driving portion of said cover at its forward end and movable within the discharge opening of said magazine, third spring means connected to the support portion and the driving portion of said cover and normally holding said staple driver above the discharge opening of said magazine, a pivotally movable actuator overlying said cover and normally overlying said cover, disengageable latching means upon said cover and said actuator, said actuator being swingable away from said cover to permit opening of said magazine, said cover retracting said follower when it is swung away from said magazine.

4. A stapling plier comprising a base, an anvil upon said base, an open magazine pivotally connected to said base and spaced therefrom, said magazine having a rail longitudinally disposed therewithin and a staple discharge opening at its forward end, a movable follower upon said rail, first spring means between said base and said magazine; a pivotally movable cover normally overlying said magazine, a spring roller at the forward portion of said cover behind said staple discharge opening, a second coil spring secured to said follower disposed over said spring roller and also secured to said cover behind said spring roller, said second coil spring normally urging said follower toward said staple discharge opening, said cover also having a support portion and a driving portion downwardly movable with respect to said support portion, a staple driver secured to the driving portion of said cover at its forward end and movable within the discharge opening of said magazine, third spring means connected to the support portion and the driving portion of said cover and normally holding said staple driver above the discharge opening of said magazine, a pivotally movable actuator normally overlying said cover, disengageable latching means upon said cover and said actuator, said actuator being swingable away from said cover to permit opening of said magazine, additional disengageable latching means upon the rear of said cover and the rear of said magazine, said additional latching means being normally disengaged but engaged when said cover is swung away from said magazine, said cover also retracting said follower in such position.

5. A stapling plier comprising a base, an anvil upon said base, an open magazine pivotally connected to said base and spaced therefrom, said magazine having a rail longitudinally disposed therewithin and a staple discharge opening at its forward end, a movable follower upon said rail, a first leaf spring connected to said base and extending between said base and said magazine; a pivotally movable cover normally overlying said magazine, a spring roller at the forward portion of said cover but behind said staple discharge opening, a second coil spring secured to said follower, disposed over said spring roller, and also secured to said cover behind said spring roller, said second coil spring normally urging said follower toward said staple discharge opening, said cover also having a support portion and a driving portion, a staple driver secured to the driving portion of said cover at its forward end and movable within the discharge opening of said magazine, said staple driver having an operating portion and a holding portion, said operating portion being angularly disposed from said holding portion at an angle of less than 180 degrees but more than 90 degrees; a third wire spring having bifurcated lateral portions, a pair of end portions, a transverse connecting portion at one end portion thereof, and a pair of reverse acute angular bends between said end portions, one end portion of said third spring being connected to the support portion of said cover and the other end portion of said third spring being connected to the operating portion of said cover; a pivotally movable actuator disposed about said magazine and normally overlying said cover, disengageable latching means upon said cover and said actuator, said actuator being swingable away from said cover to permit opening of said magazine; additional disengageable latching means upon the rear of said cover and the rear of said magazine, said additional latching means being normally disengaged but engaged when said cover is swung away from said magazine, said cover also retracting said follower in such position.

6. A stapling plier comprising a base, an anvil upon said base, an open magazine pivotally connected to said base and spaced therefrom, said magazine having a pair of extending lateral portions, a rail longitudinally disposed therewithin and a staple discharge opening at its forward end; a movable follower upon said rail, a first leaf spring connected to said base and extending between said base and said magazine; a pivotally movable cover normally overlying said magazine; a spring roller at the forward portion of said cover but behind said staple discharge opening, a second coil spring secured to said follower, disposed over said spring roller, and also secured to said cover behind said spring roller, said second coil spring normally urging said follower toward said staple discharge opening, said cover having a support portion and a driving portion downwardly movable with respect to said support portion; a staple driver secured to the driving portion of said cover at its forward end and movable within the discharge opening of said magazine, said staple driver having an operating portion and a holding portion, said operating portion being angularly disposed from said holding portion at an angle of less than 180 degrees but more than 90 degrees; a third wire spring having bifurcated lateral portions, a pair of end portions, a transverse connecting portion at one of said end portions, and a pair of reverse acute angular bends between said end portions, one end portion of said third spring being connected to the support portion of said cover and the other end portion of said third spring being connected to the operating portion of said cover; a pivotally movable actuator normally overlying said cover having a pair of bifurcated lateral portions secured by said lateral portions to the bifurcated portions of said magazine; disengageable latching means upon said cover and said actuator, said actuator being swingable away from said cover to permit opening of said magazine; additional disengageable latching means upon the rear of said cover and the rear of said magazine, said additional latching means being normally disengaged but engaged when said cover is swung away from said magazine, said cover also retracting said follower in said position.

7. In a stapling machine the improvement which comprises a spring member having bifurcated lateral portions, a pair of end portions, a transverse connecting portion at one of said end portions, and a pair of reverse acute angular bends between said end portions.

8. In a stapling machine the improvement which comprises a magazine cover having a staple driver secured thereto, said cover also having a support portion and a driving portion, a wire spring member between said support portion and said cover portion, said spring member having bifurcated lateral portions, a pair of end portions, a transverse connecting portion at one of said end portions, and a pair of reverse acute angular bends between

said end portions, one end portion of said spring being connected to the support portion of said cover and the other end portion of said spring being connected to the driving portion of said cover.

9. A stapling plier comprising a base, an anvil upon said base, said base also having a pair of upwardly extending lateral portions, said lateral portions extending further upwardly at their forward portions, an open magazine pivotally connected to said base and spaced therefrom, said magazine lying between said upwardly extending lateral portions of said base, a rail longitudinally disposed therewithin and a staple discharge opening at its forward end; a movable follower upon said rail, a first leaf spring connected to said base and extending between said base and said magazine; a pivotally movable cover normally overlying said magazine and secured to the rear portions of the upwardly extending lateral portions of said base; a spring roller at the forward portion of said cover but behind said staple discharge opening, a second coil spring secured to said follower, disposed over said spring roller, and also secured to said cover behind said spring roller, said second coil spring normally urging said follower toward said staple discharge opening, said cover having a support portion and a driving portion downwardly movable with respect to said support portion; a staple driver secured to the driving portion of said cover at its forward end and movable within the discharge opening of said magazine, said staple driver having an operating portion and a holding portion, said operating portion being angularly disposed from said holding portion at an angle of less than 180 degrees but more than 90 degrees; a third wire spring having bifurcated lateral portions, a pair of end portions, a transverse connecting portion at one of said end portions, and a pair of reverse acute angular bends between said end portions, one end portion of said third spring being connected to the support portion of said cover and the other end portion of said third spring being connected to the operating portion of said cover; a pivotally movable actuator normally overlying said cover having a pair of bifurcated lateral portions secured by said lateral portions to the forward portions of the upwardly extending lateral portions of said base; disengageable latching means upon said cover and said actuator, said actuator being swingable away from said cover to permit opening of said magazine; additional disengageable latching means upon the rear of said cover and the rear of said magazine, said additional latching means being normally disengaged but engaged when said cover is swung away from said magazine, said cover also retracting said follower in said position.

10. A stapling machine comprising a magazine, a follower within said magazine, a cover overlying said magazine, said cover having a support portion and a driving portion connected to one another, said driving portion being downwardly movable with respect to said support portion, staple driving means and actuating means for said staple driving means operatively connected with said cover, said actuating means overlying said cover and adapted to be disengaged therefrom to permit opening of said magazine.

11. A stapling machine comprising a magazine, a movable follower therewithin, a pivotally movable cover normally overlying said magazine, said cover having a support portion and a driving portion connected to one another, said driving portion being downwardly movable with respect to said support portion, a staple driver secured to the driving portion of said cover, a pivotally movable actuator overlying said cover and operatively connected thereto, said actuator adapted to be disengaged and swung away from said cover to permit opening of said magazine.

12. A stapling machine comprising a magazine provided with a staple discharge opening therewithin, said magazine also having staple supporting means and a movable follower therewithin, a pivotally movable cover normally overlying said magazine, said cover having a support portion and a driving portion connected to one another, said driving portion being downwardly movable with respect to said support portion, a staple driver blade secured to the driving portion of said cover, spring means secured to said cover and to said follower normally urging said follower toward said staple discharge opening, a pivotally movable actuator overlying said cover and operatively connected thereto, said actuator adapted to be disengaged and swung away from said cover to permit opening of said magazine.

References Cited in the file of this patent

UNITED STATES PATENTS

2,247,292	Eps	June 24, 1941
2,251,917	Crosby	Aug. 12, 1941
2,312,142	Abrams	Feb. 23, 1943
2,670,468	Morano	Mar. 2, 1954
2,859,443	Jopp	Nov. 11, 1958

FOREIGN PATENTS

853,556	Great Britain	Nov. 9, 1960