June 18, 1929. F. W. FITCH 1,717,672

DISPENSER

Filed Jan. 16, 1928

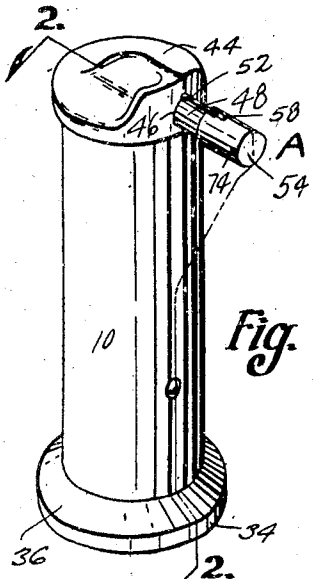

Fig. 1.

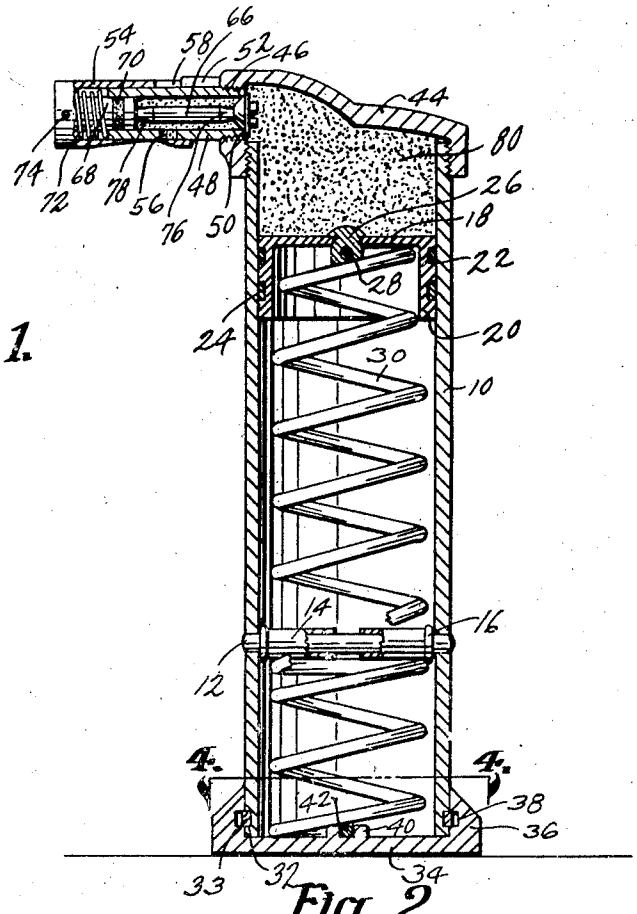

Fig. 2.

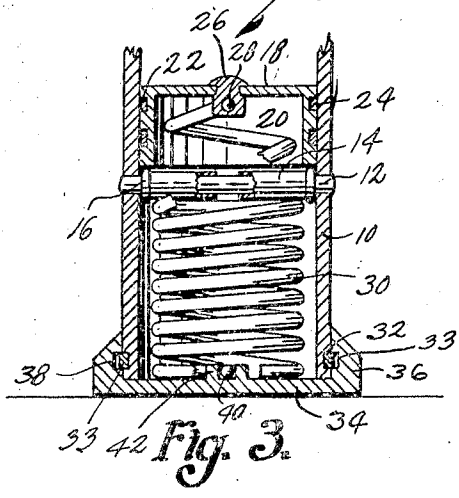

Fig. 3.

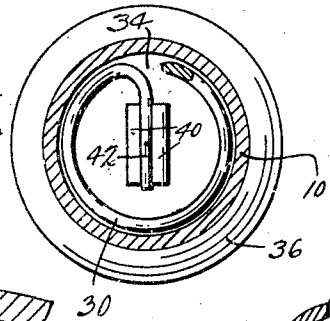

Fig. 4.

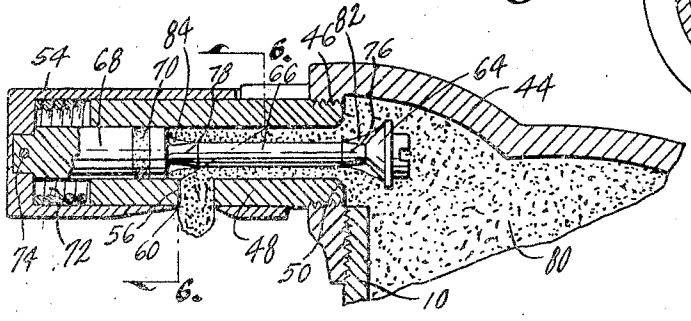

Fig. 5.

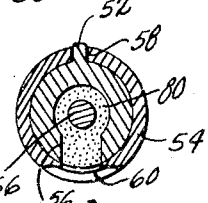

Fig. 6.

Witness
D. E. Bovey

Inventor
-Fred W. Fitch-
By Bair & Freeman Attorneys

Patented June 18, 1929. 1,717,672

UNITED STATES PATENT OFFICE.

FRED W. FITCH, OF DES MOINES, IOWA.

DISPENSER.

Application filed January 16, 1928. Serial No. 247,132.

The object of my invention is to provide a dispenser particularly intended and adapted for use with shaving cream and products of a somewhat similar consistency, but capable of use for a great variety of products of very simple and inexpensive and efficient construction.

A further purpose of the present invention is to provide such a dispenser in which special means is provided for imposing pressure on the contents.

Still another purpose is to provide in such a device a desirable control means having parts so arranged and constructed as to permit the cream to be discharged from the dispenser in small quantities and yet to prevent leakage and to afford such cut-off means that no drop or surplus of cream will be left on the outside of the dispenser.

With these and other objects in view, my invention consists in the construction, arrangement and combination of the various parts of my dispenser, whereby the objects contemplated are attained, as hereinafter more fully set forth, pointed out in my claims, and illustrated in the accompanying drawings, in which:

Figure 1 is a perspective view of a dispenser embodying my invention.

Figure 2 is a vertical, detail, sectional view taken on the line 2—2 of Figure 1.

Figure 3 is a similar view of the lower part of the dispenser, the compression spring being shown in another position.

Figure 4 is a horizontal, sectional view taken on the line 4—4 of Figure 2.

Figure 5 is a vertical, sectional view through the discharge nozzle of the dispenser; and

Figure 6 is a detail, sectional view taken on the line 6—6 of Figure 5, the movable cap forming part of the discharge nozzle being shown at its inner limit of movement.

In the accompanying drawings, I have used the reference numeral 10 to indicate generally the casing forming a part of my improved dispenser. The casing 10 is a tubular member, which prior to the assembly of the other parts thereon is open at both ends.

Mounted in the casing 10 and extending diametrically across the casing and supported in its wall at its opposite sides is a shaft 12. On the shaft 12 are rotatably mounted two sleeves 14, each provided at its outer end with an annular rib 16.

Slidably received in the casing 10 above the shaft 12 is a plunger 18 having a downwardly hanging apron 20. The apron 20 is provided with suitable ring grooves 22 to receive the expansion rings 24 of the usual type.

A small cylindrical block 26 is rotatably mounted in the plunger 18 and has one end 28 of a coil spring 30 secured to it below the plunger 18.

The shaft 12 extends across the spring 30, as shown in Figure 2, so that by rotating the spring it may be screwed upwardly or downwardly on the shaft 12.

The casing 10 has at its lower end in its outer surface an annular groove 32.

I provide a bottom cap 34 having an annular flange 36 provided with an annular, internal groove 38. The cap 34 is provided on its upper surface with a pair of spaced ribs 40, which receive between them the end 42 of the spring 30. The cap is placed below the casing 10 with the spring end 42 received between the guides 40.

The resilient expansion ring 33 is then compressed in the groove 32 until the edge of the flange 36 is slipped over the lower part of the expansion ring and then the cap is slipped into place as shown in Figures 2 and 3, whereupon the ring 33 expands until it stands partly in the groove 38 whereupon the cap will be rotatably but non-removably mounted on the casing.

By rotating the cap, the spring will be rotated and caused to travel up and down on the shaft 12.

The sleeves 14 reduce the friction between the spring and the shaft.

I shall now describe the discharge nozzle structure of my improved dispenser.

The discharge nozzle is indicated generally at A.

The casing 10 is provided with a screw cap 44, which has at one side a discharge opening 46. Screwed into the discharge opening 46 is a tube 48 having at its inner end a valve seat 50.

Preferably on the upper part of the tube 48 is a longitudinally arranged rib 52.

Mounted on the outer end of the tube 48 is a sliding cap 54.

In the under side of the tube 48 is a discharge opening 56 elongated circumferentially of the tube 48.

The cap 54 has in its upper part a slot 58 to receive the rib 52. In its lower part the

cap 54 has a discharge opening 60 likewise circumferentially elongated. The material of the cap 54 on both sides of the opening 60 is tapered as indicated at 62 (Figure 2).

I provide a combination valve and plunger structure, comprising a cone-shaped valve 64, adapted to coact with the seat 50. Connected with the valve 64 is a stem 66 projecting into the tube 48 and having in its outer end a plunger member 68. The plunger member fits snugly in the tube 48 and projects from the outer end thereof. The stem is of smaller diameter than the interior of the tube 48.

Inset in the plunger 68 near its inner end is a ring 70 of leather or suitable material arranged to fit very snugly in the tube 48.

In the outer end of the cap 54 between the end thereof and the outer end of the tube 48 is a coil spring 72.

The outer end of the plunger 68 is connected with the outer end of the cap 54 by means of a pin 74.

The inner end of the stem 66 has a portion 76 tapered toward the valve 64, and the outer end thereof has a portion 78 tapered toward the plunger 68.

In the actual use of my dispenser, the cap 44 is removed, the lower cap 34 is rotated until the larger portion of the spring 30 is below the shaft 12 as illustrated for instance in Figure 3, a charge of shaving cream or the like 80 is placed in the container 10, and the cap 44 is then replaced.

The spring 72, being compressed between the end of the tube 48 and the closed end of the cap 54, pushes the cap outwardly for setting the valve 64, and holding the opening 60 in the cap 54 outwardly just beyond the opening 56 in the tube 48. The cap 34 is then rotated for causing the spring 30 to travel upwardly on the shaft 12, so that a substantial portion of the spring will be compressed between the shaft 12 and the plunger 18 for imparting substantial pressure on the shaving cream 80.

When it is desired to take a small charge of cream from the dispenser, the cap 54 is pressed toward the container, thus compressing the spring 72 and shoving the plunger 68, the stem 66 and the valve 64 inwardly.

The cream being under pressure will travel into the space in the tube 48 around the stem 66.

The inward movement of the cap 54 brings the opening 60 to register with the opening 56 (see Figure 5).

Some of the cream will pass out through the openings 56 and 60 and when the pressure on the cap 54 is released, the spring 72 will move the cap outwardly, causing the opening 60 to move to position out of registry with the opening 56 and immediately thereafter causing the valve 64 to be seated.

The sharp edge around the opening 60 shears the cream which has been discharged from the cream inside of the discharge nozzle.

I have done a great deal of experimenting in trying to develop a discharge nozzle, which will not leak, and which will not leave a drop of cream hanging around the discharge opening.

My present nozzle accomplishes these desirable purposes.

By the use of the ring 70 of leather or similar material, I impart enough friction to the parts, so that the action of the spring on the cap 54 and connecting parts is in itself quick, and I also prevent any leakage of cream past the ring 70.

One trouble, which I have found great difficulty in overcoming, has been due to the fact that the cream in the tube 48 is under pressure after the valve 64 is closed, unless some means for relieving such pressure is provided, and when such pressure exists, it is difficult to make a nozzle from which the cream does not ooze out.

I have relieved the pressure on the cream in the tube 48 after the valve 64 is closed by providing the tapered portions 76 and 78 at the ends of the stem 66.

I have tried a nozzle of the kind here shown without the tapered portion and found it impossible to avoid some oozing of the cream.

If a little cream squeezes out, the device is unsatisfactory. Since the device is used in barber shops, this is an undesirable feature, displeases customers, and is of considerable importance. I found that by forming the stem 66 with the tapered portions 76 and 78 the oozing out of the cream is avoided.

This result is accomplished, as I believe, because when the cream is traveling outwardly, when the nozzle is in discharging position, as shown in Figure 5, the movement of the cream causes vacuum pockets 82 and 84 around the tapered portions 76 and 78.

In this connection, I form the opening 56 of such size as to easily take care of all cream that will discharge through the passage around the stem 66 without imposing any back pressure.

With the structure here shown, when the valve 54 is closed, the cream under pressure in the passage around the stem 66 will expand into the air pockets, and the pressure on the cream will disappear, and hence there is not the tendency for the cream to force or ooze its way out through the opening 56, and between the tube 48 and the walls of the cap 54 to the opening 60, as occurs when no tapered portions 76 and 78 are provided.

The feature just described is one of great importance in a device of this kind because it results in a discharge nozzle from which the cream will not ooze out.

My entire device is of simple construction and is intended to be furnished primarily to barbers, so that the barber can use fresh shaving cream for each customer under the most sanitary conditions.

I claim as my invention:

1. In a dispenser, a tubular casing, a discharge nozzle therefor, a plunger in said casing, a transverse shaft in said casing on the other side of the plunger from the nozzle, a rotatable cap on the opposite end of the casing from the nozzle, a coil spring bearing against said plunger and fixed to said rotatable cap and adapted to travel on said shaft when said cap is rotated, and antifriction suitable sleeves on said shaft for contact with opposite sides of said spring.

2. In a dispenser, a tubular casing for containing cream or the like, adjustable means for imparting pressure on said cream from one end of the casing, and a discharge nozzle at the other end of the casing, comprising a tube communicating with the casing having a valve seat at its inner end, having a discharge opening in its under part, a cap slidably mounted on said tube having an opening adapted to register with said first opening in one position of the cap, a plunger secured to the outer end of said cap and slidably mounted in the outer end of said tube, a spring between said tube and the outer end of the cap, a stem projecting from said plunger through said tube, and a valve on the inner end of said stem for coacting with said plunger, said stem being tapered at its inner end toward said valve.

3. In a dispenser, a tubular casing for containing cream or the like, adjustable means for imparting pressure on said cream from one end of the casing, and a discharge nozzle at the other end of the casing, comprising a tube communicating with the casing having a valve seat at its inner end, having a discharge opening in its under part, a cap slidably mounted on said tube having an opening adapted to register with said first opening in one position of the cap, a plunger secured to the outer end of said cap and slidably mounted in the outer end of said tube, a spring between said tube and the outer end of the cap, a stem projecting from said plunger through said tube, and a valve on the inner end of said stem for coacting with said plunger, said tube and cap having coacting means for preventing rotation of the cap on the tube.

4. In a dispenser, a casing for containing cream or the like, means for impelling the contents of the casing toward its discharge end, a discharge nozzle at such end of the casing, comprising a member having a passage communicating with the casing, having a valve seat at its inner end, and a discharge opening in its under part, a cap slidably mounted on said member having an opening adapted to register with said first opening in one position of the cap, a plunger secured to the outer end of said cap and slidably mounted in the outer end of said tube, yielding means tending to hold the cap at its outward limit of movement, a stem projecting from said plunger through said tube and a valve on the inner end of said stem for coacting with said seat.

Des Moines, Iowa, January 3, 1928.

FRED W. FITCH.