Office de la Propriété Intellectuelle du Canada
Un organisme d'Industrie Canada

Canadian Intellectual Property Office
An agency of Industry Canada

CA 2578174 C 2010/05/04

(11)(21) **2 578 174**

(12) **BREVET CANADIEN**
CANADIAN PATENT

(13) **C**

(86) Date de dépôt PCT/PCT Filing Date: 2005/09/09
(87) Date publication PCT/PCT Publication Date: 2006/03/30
(45) Date de délivrance/Issue Date: 2010/05/04
(85) Entrée phase nationale/National Entry: 2007/02/27
(86) N° demande PCT/PCT Application No.: US 2005/032081
(87) N° publication PCT/PCT Publication No.: 2006/033849
(30) Priorités/Priorities: 2004/09/15 (US60/610,081); 2004/12/28 (US60/639,829)

(51) Cl.Int./Int.Cl. *B02C 19/00* (2006.01)

(72) Inventeurs/Inventors:
DRUMMOND, GARRY N., US;
HONEYCUTT, EUGENE, US;
ANDERSON, HAROLD GENE, US

(73) Propriétaire/Owner:
DRUMMOND COMPANY, INC., US

(74) Agent: BLANEY MCMURTRY LLP

(54) Titre : PROCEDE ET DISPOSITIF D'EXPLOITATION MINIERE EN GRADINS A CIEL OUVERT
(54) Title: METHOD AND APPARATUS FOR OPEN PIT BENCH MINING

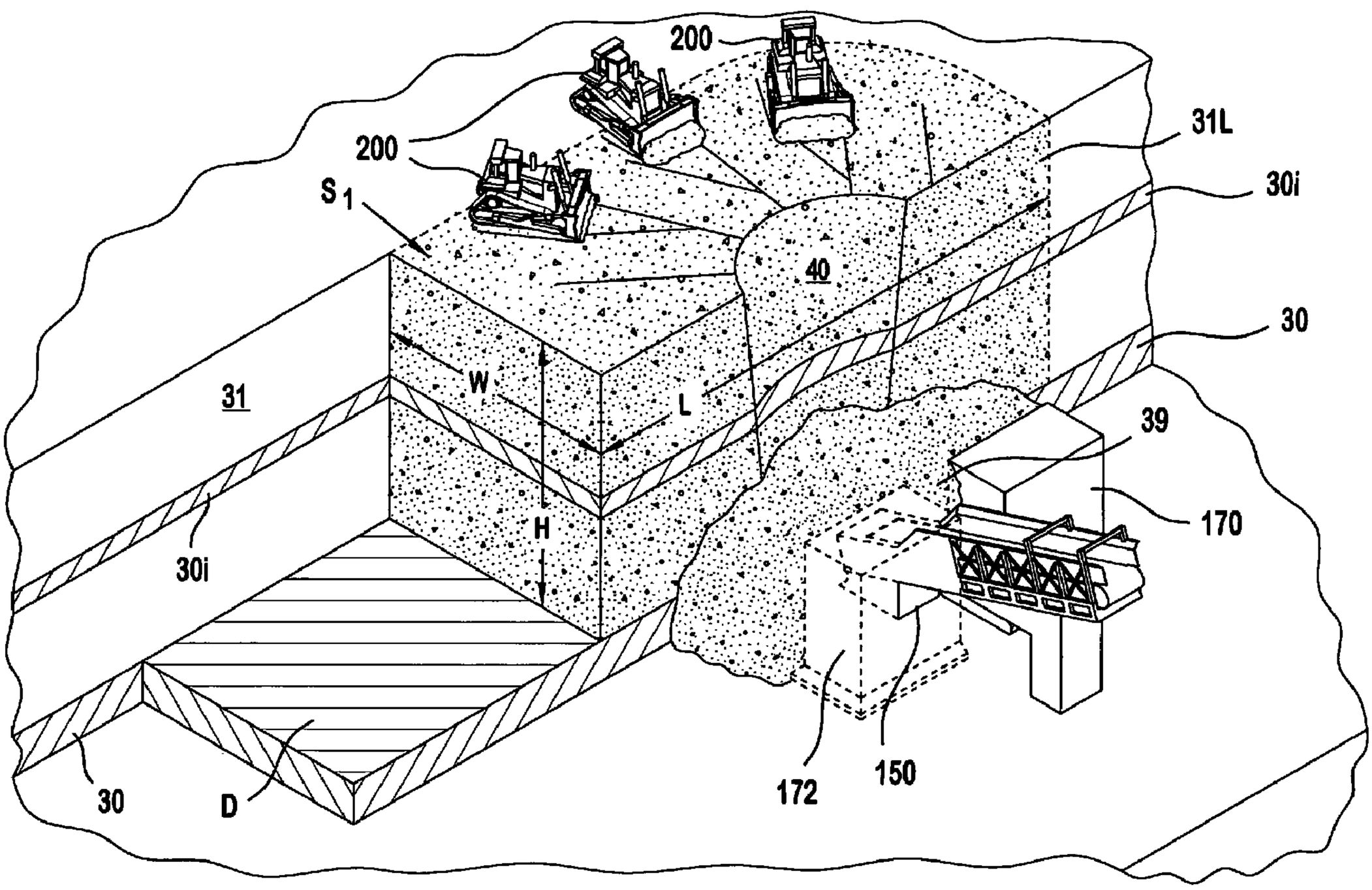

(57) Abrégé/Abstract:
A bench mining system and mining method, particularly useful for open pit bench mining, employs a combination of bulldozers and transversely movable apron feeders to provide the primary mechanism for removal of overburden. The apron feeders are preferably equipped with a self-cleaning arrangement to facilitate continuous operation without undue stoppages.

(12) INTERNATIONAL APPLICATION PUBLISHED UNDER THE PATENT COOPERATION TREATY (PCT)

(19) World Intellectual Property Organization
International Bureau

(43) International Publication Date
30 March 2006 (30.03.2006)

PCT

(10) International Publication Number
WO 2006/033849 A3

(51) International Patent Classification:
B02C 19/00 (2006.01)

(21) International Application Number:
PCT/US2005/032081

(22) International Filing Date:
9 September 2005 (09.09.2005)

(25) Filing Language: English

(26) Publication Language: English

(30) Priority Data:

60/610,081	15 September 2004 (15.09.2004)	US
60/639,829	28 December 2004 (28.12.2004)	US

(71) Applicant *(for all designated States except US)*: **DRUMMOND COMPANY INC.** [US/US]; 1000 Urban Center Drive, Suite 370, Birmingham, AL 35202 (US).

(72) Inventors; and
(75) Inventors/Applicants *(for US only)*: **DRUMMOND, Garry, N.** [US/US]; 5366 Overton Road, Birmingham, AL 35210 (US). **HONEYCUTT, Gene** [US/US]; 3842 White Oak Drive, Birmingham, AL 35243 (US). **ANDERSON, Harold** [US/US]; Jasper, Alabama (US).

(74) Agent: **SCHOTT, Stephen, B.**; Volpe and Koenig, P.C., United Plaza, Suite 1600, 30 South 17th Street, Philadelphia, PA 19103 (US).

(81) Designated States *(unless otherwise indicated, for every kind of national protection available)*: AE, AG, AL, AM, AT, AU, AZ, BA, BB, BG, BR, BW, BY, BZ, CA, CH, CN, CO, CR, CU, CZ, DE, DK, DM, DZ, EC, EE, EG, ES, FI, GB, GD, GE, GH, GM, HR, HU, ID, IL, IN, IS, JP, KE, KG, KM, KP, KR, KZ, LC, LK, LR, LS, LT, LU, LV, MA, MD, MG, MK, MN, MW, MX, MZ, NA, NG, NI, NO, NZ, OM, PG, PH, PL, PT, RO, RU, SC, SD, SE, SG, SK, SL, SM, SY, TJ, TM, TN, TR, TT, TZ, UA, UG, US, UZ, VC, VN, YU, ZA, ZM, ZW.

(84) Designated States *(unless otherwise indicated, for every kind of regional protection available)*: ARIPO (BW, GH, GM, KE, LS, MW, MZ, NA, SD, SL, SZ, TZ, UG, ZM, ZW), Eurasian (AM, AZ, BY, KG, KZ, MD, RU, TJ, TM), European (AT, BE, BG, CH, CY, CZ, DE, DK, EE, ES, FI, FR, GB, GR, HU, IE, IS, IT, LT, LU, LV, MC, NL, PL, PT, RO, SE, SI, SK, TR), OAPI (BF, BJ, CF, CG, CI, CM, GA, GN, GQ, GW, ML, MR, NE, SN, TD, TG).

Published:
— *with international search report*
— *with amended claims*

[Continued on next page]

(54) Title: METHOD AND APPARATUS FOR OPEN PIT BENCH MINING

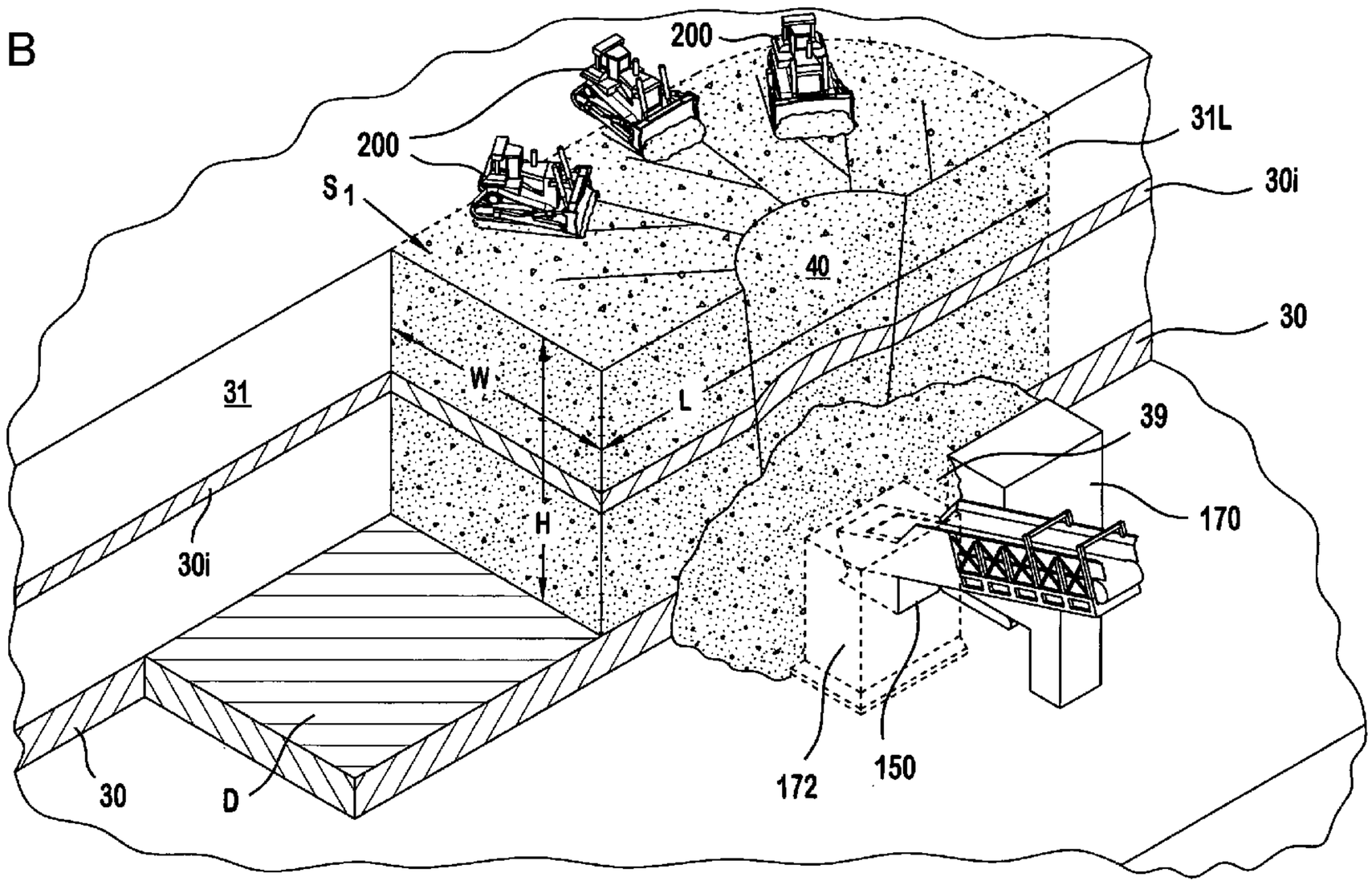

(57) Abstract: A bench mining system and mining method, particularly useful for open pit bench mining, employs a combination of bulldozers and transversely movable apron feeders to provide the primary mechanism for removal of overburden. The apron feeders are preferably equipped with a self-cleaning arrangement to facilitate continuous operation without undue stoppages.

WO 2006/033849 A3

WO 2006/033849 A3

(88) Date of publication of the international search report:
13 July 2006

Date of publication of the amended claims:
14 September 2006

For two-letter codes and other abbreviations, refer to the "Guidance Notes on Codes and Abbreviations" appearing at the beginning of each regular issue of the PCT Gazette.

[0001] METHOD AND APPARATUS FOR OPEN PIT BENCH MINING

[0002] FIELD OF INVENTION

[0003] This invention relates to methods and apparatus for mining and in particular for open pit bench mining and apron feeders used in connection therewith.

[0004] BACKGROUND

[0005] In modern mining, geologic surveys and other techniques estimate the size and shape of mineral and/or ore configurations before their removal in a mining operation. The ore and mineral deposits exist in layers or veins at varying depths below ground. For example, deposits of coal can be divided into multiple layers of substantially horizontal planes of varying thickness and at various depths such that several deposits or veins lie at different levels spanning hundreds of feet below ground. Such layers of mineral and ore deposits are often not completely horizontal but have a pitch or slope. Because of the three dimensional sloping layers, the deposits are generally mined from the shallowest end of the deposit in a down slope direction.

[0006] In general the rock and earth disposed on top of a mineral or ore layer is referred to as "overburden". In open pit mining, the overburden atop a first uppermost layer is removed to substantially expose a strip of the mineral or ore deposit. The exposed deposit is then accessible to be removed by mining the uncovered portion and transporting it from the mine for shipment or other processing. Overburden is then removed from above a next adjacent strip of the first layer deposit to substantially expose more of the first deposit layer for removal by mining and shipment.

[0007] In open pit mining, once a portion of the uppermost deposit layer is mined and removed, the rock that had been sandwiched between the uppermost layer and the and the next lower deposit layer is exposed and is the

overburden atop the next lower layer. Accordingly, the open pit process mining continues by removing strips of that overburden to generally expose the next deposit layer, in a sequential process that continues until successive deposit layers are exhausted. Depending on the size of the deposit, each strip may be several miles in length and is typically about 100 or more feet in width depending on the type of equipment used for the mining operation and other factors such as the size and pitch of the deposit layer.

[0008] As open pit mining continues, overburden removal above each deposit layer forms steps or benches. At each step, multiple removal operations increase efficiency in mining the ore or other minerals within the deposits. Multiple operations, however, take some time, and can be cost prohibitive if projected mining yields are not sufficiently high.

[0009] The valuable deposit layers are generally much smaller than the layers of overburden. Thus, the most labor intensive task in open pit mining is the removal of the overburden.

[0010] In one conventional mining method, a bucket wheel excavator 500, as illustrated in Figure 1A, loads overburden 29 onto dump trucks 180. A single bucket wheel excavator 500 may cost on the order of One-Hundred Million Dollars ($100,000,000) and require a trained crew of 6 to 8 persons to operate.

[0011] As an alternative to a bucket wheel excavator, shovels, drag lines or other bucket type equipment are often used to remove overburden. For example, Figure 1B illustrates a conventional operation where a shovel 502 loads large oversized dump trucks 180 which deposit their materials into a hopper on a centrally located apron feeder 550. The apron feeder 550 may feed a sizer that reduces oversized chunks of overburden to a size manageable by a conveyor 506 or other means of transport that carries the removed overburden away from the active mining area.

[0012] In a conventional mining operation, the apron feeders 550 is typically located at a semi-permanent position where overburden is trucked and deposited to a feed end of the apron feeder. When initially positioned or relocated, an apron feeder 550 is traditionally moved in a direction aligned

with the feeder's conveyor operation so that they are essentially backed into a desired location. It is known in the art to provide apron feeders 552 with wheels or crawler undercarriage in line with the feeder operation for the purpose of positioning the apron feeders 552 such as illustrated in Figures 2A and 2B.

[0013] Applicants have recognized that it would be desirable to provide a method and system of open pit mining that reduces or eliminates the need for reliance on complicated and expensive equipment such as bucket wheel excavators and efficiently uses the necessary equipment. Applicants have in particular recognized that more efficient mining can be conducted through the creative expanded use of apron feeders in the mining operation.

[0014] Further, applicants have recognized that improved apron feeder designs may be employed to prevent costly operational stoppages due to the need for cleaning clogged material from an apron feeder.

[0015] SUMMARY

[0016] A bench mining system, mining method and related equipment are provided in which a combination of bulldozers and transversely movable apron feeders provide a primary mechanism for overburden removal. The mobility of teams of dozers along with the apron feeder, as described herein, is a significantly new and effective innovation in overburden removal. With an eye towards being able to move the entire mining operation, not only are the earth-moving pieces of equipment considered movable, but so is the entire infrastructure supporting the earth-moving equipment, including pump-houses, retaining walls, and the like.

[0017] In a preferred embodiment, a mining floor or "bench" is defined adjacent to a section of a deposit layer and overburden. Preferably, the overburden and deposit layer have a combined height relative to the bench of between 50 to 150 feet. An apron feeder is disposed on the bench in front of a pre-blasted section of overburden which preferably runs about 300 feet along the bench and the apron feeder is preferably positioned in the approximate center of the 300 feet long section. Selective blasting, as is well known in the

art, is used to loosen the overburden rock and/or other material of which it is composed while leaving the deposit layer substantially intact. Preferably, the loosened section of overburden in front of which the apron feeder is positioned is about 225 feet wide, extending away from the apron feeder.

[0018] The invention further comprises bulldozers working in coordinated teams that push the overburden of the pre-blasted section onto the feed end of the apron feeder by preferably forming a natural hopper and relying on gravity to create a flow of the loosened overburden into the apron feeder. The bulldozers preferably work in defined zones and coordinate their efforts depending on the number of bulldozers employed. The apron feeder is then used to either load the bulldozed overburden onto trucks or onto a conveyor system for removal from the active mining area. After overburden removal, the substantially uncovered portion of the deposit layer is then mined using conventional methods.

[0019] The operation preferably continues along the bench by blasting further sections of overburden and transversely relocating the apron feeder in front of the next loosened section whereat further bulldozing pushes the loosened overburden into the apron feeder, which in turn, feeds the trucks or the conveyor system.

[0020] Where the layer deposits are in closely spaced intervals of less than 50 feet, a bench can be defined adjacent a section having an intermediate deposit layer within the overburden. In such case, selected blasting techniques known in the art are employed to blast the overburden atop the intermediate deposit layer as well as below the intermediate deposit layer. Then the bulldozing operation first removes the upper portion of overburden above the intermediate deposit layer and the intermediate deposit layer is mined and removed. Thereafter, the bulldozers are used to remove the lower portion of the overburden. The apron feeder can be either transversely displaced to a location for receiving another section of upper loosened overburden while the intermediate deposit layer is mined from the first section or remain at the same location for both upper and lower overburden removal operations.

[0021] Where the layer deposits are spaced at an interval of more than 150 feet, a bench can be defined where there is no deposit layer of mineral or ore within the overburden. In such case, after blasting and removal of the loosened overburden by dozing it into the apron feeder, no mining operation is required on that bench.

[0022] The blasting, dozer/apron feeder overburden removal, and deposit mining operations are preferably contemporaneously conducted on several benches where each operation is selectively transversely spaced from each other by a selected safety margin.

[0023] In order to implement the system and operation thereof, the inventive apron feeders are preferably provided with a frame that permits engagement with a crawler for displacement of the apron feeder in a direction that is transverse to a conveying direction of the apron feeder. Alternatively, the apron feeder is provided with an innovative dedicated crawler affixed thereto or other means of transverse locomotion to facilitate efficient operations as the removal of overburden proceeds along one of the benches.

[0024] Preferably, apron feeders used to conduct the inventive mining operation are provided with a self-cleaning mechanism to facilitate continuous operation without undue stoppage delays. In particular, the apron feeder is preferably provided with a scroll plate at its inlet end to catch overspill material as the apron feeder is loaded. Preferably, a "grizzly" component is mounted on an apron feeder flight that serves to break up and/or loosen material caught by the scroll plate and a wiper component is disposed on an apron feeder flight a selected distance behind the grizzly to clear the material from the scroll by pushing it back to the top of the apron feeder inlet end.

[0025] Other objects and advantages of the present invention will be apparent from the following detailed description and the accompanying drawings.

[0026] BRIEF DESCRIPTION OF THE DRAWING(S)

[0027] Figure 1A is a perspective illustration of a prior art bucket wheel excavator used in conventional open pit mining.

[0028] Figure 1B is a schematic illustration of a conventional open pit mining operation where a shovel loads short haul dump trucks that transport the shoveled material to a relatively stationary fixed position apron feeder in a conventional open pit mining operation.

[0029] Figure 2A illustrates the mobility of a conventional apron feeder in line with the feeder's conveying operation utilizing a crawler.

[0030] Figure 2B illustrates the mobility of a conventional apron feeder in line with the feeder's conveying operation utilizing wheels.

[0031] Figure 3A is an overall perspective view of an open pit bench mining system in accordance with the teachings of the present invention.

[0032] Figure 3B is a perspective schematic diagram of the mining system of Figure 3A wherein a bench is adjacent to a formation that includes multiple deposit layers.

[0033] Figure 4 is an elevated side view of an apron feeder configured for use in the mining operation depicted in Figures 3A and 3B.

[0034] Figure 5A is an illustration of a preferred apron feeder and transporter.

[0035] Figure 5B is an illustration of a transport tractor.

[0036] Figure 5C is an illustration of a preferred apron feeder with extension walls and a sizer attached to the outlet end of the apron feeder.

[0037] Figure 5D is an illustration of an apron feeder with extension walls.

[0038] Figure 5E is an illustration of an alternate embodiment of the transport tractor and apron feeder.

[0039] Figure 6A is an elevated side view of the feed end of an apron feeder fitted with a scroll element.

[0040] Figure 6B is a perspective illustration of a self-cleaning mechanism of an apron feeder.

[0041] Figure 6C is a perspective illustration of a top view of a preferred apron feeder.

[0042] Figure 6D is a perspective illustration of a top view of a preferred apron feeder.

[0043] Figures 7A and 7B are side and top views of an initial push to an apron feeder.

[0044] Figures 7C-E show three successive cuts of overburden.

[0045] Figure 8 illustrates a top view of a successive dozer push towards an apron feeder.

[0046] Figure 9 illustrates a top view of a first embodiment of a method of loading the apron feeder.

[0047] Figure 10 illustrates a top view of a second embodiment of a method of loading an apron feeder.

[0048] Figure 11 illustrates a top view of a third alternate embodiment of a method of loading an apron feeder.

[0049] Figures 12A-H illustrate iterative steps in a top view of a fourth method for loading a movable apron feeder.

[0050] Figures 13A-H illustrate iterative steps in a top view of a fifth method for loading a movable apron feeder.

[0051] Figure 14A-I illustrate iterative steps in moving an apron feeder used in the invention.

[0052] DETAILED DESCRIPTION OF PREFERRED EMBODIMENTS

[0053] Overview of Operation and Equipment

[0054] Figure 3A illustrates an open pit mining operation 20 wherein three benches 22, 24, 26 are at different levels relative to deposit layers 28, 30, 32 respectively. A layer of overburden 29, 31, 33, which a removal operation carries away, covers each level of deposit layer 28, 30, 32. Once the mineral or ore deposit is exposed, a mining operation removes the deposit layer 28, 30, 32 for further processing.

[0055] Preferably, the benches 22, 24, 26 are defined such that the height H of the deposit 28, 30, 32 and overburden 29, 31, 33 to which they are adjacent is between 50 and 150 feet. Each bench itself, preferably has a width of at least 100 feet extending from the deposit and overburden to which it is adjacent.

[0056] On each bench, an apron feeder is disposed in front of a pre-blasted section S_1 of loosened overburden 29L, 31L, 33L which preferably has a length L which runs about 300 feet along the bench. The apron feeder is preferably positioned at the approximate center of the 300 feet long section S_1. Preferably, the loosened section S_1 of overburden in front of which the apron feeder is positioned has a width W of about 225, extending away from the apron feeder. With the apron feeder 150 in place, bulldozers 200 push the loosened overburden 29L, 31L, 33L of the section S_1 into the feed end 152 of the apron feeder 150 using one of the methods shown in Figures 7-13, and discussed in more detail below.

[0057] The apron feeder 150 conveys the loosened overburden 31L, 33L onto trucks 180 for removal from the active mining area. Alternatively, loosened overburden 29L is fed into a sizer 185 for removal on a conveyor system 210. After removal of the overburden 29L, 31L, 33L, a substantially uncovered section D of the deposit layer 28, 30, 32 is then mined using conventional methods. As a practical matter, trucks are preferred for the deeper benches, but this is dependent on the type and availability of conveying equipment to serve as an alternative means.

[0058] Selective blasting to loosen the overburden 29, 31, 33 is performed using techniques well known in the art to loosen the rock and other overburden material while leaving the deposit 28, 30, 32 intact. A second section S_2 of overburden may be loosened by blasting before the apron feeder/dozer overburden removal operation is conducted. In practice, both safety considerations and operational efficiency are preferably used to determine when and whether multiple sections of overburden are to be blasted to loosen the overburden for the overburden removal operation.

[0059] In accordance with conventional practice, the exposed sections D resulting from the dozer/apron feeder overburden removal operation will include a relatively small overlying buffer layer of rock material so that the mineral or ore deposit itself is not contaminated by the blasting process. That relatively thin buffer layer is removed using conventional methods and the

mineral or ore is removed by mining in a relatively pure form and is transported out of the open pit mine for further processing and/or shipment.

[0060] Preferably on each bench 22, 24, 26, the operations continue laterally along each bench and can be conducted contemporaneously at spaced locations on each bench. In general, the blasting overburden operation precedes the dozer/apron feeder overburden removal operation which in turn precedes the mining of the mineral or ore deposit. Each of the upper benches, such as benches 24 and 26, are in fact defined by overburden for a lower bench. Accordingly, the blasting of sections of overburden 29 is performed after that area has already completed its service in forming a base for removal operations of the higher overburden and mining of the upper deposits.

[0061] As illustrated in Figure 3A, contemporaneous operation of the three procedures, blasting, overburden removal and mining, can be laterally spaced along each bench with the active areas respectively being laterally spaced to produce a very efficient mining operation with relatively inexpensive equipment.

[0062] Variations Due To Spacing Of Mineral Or Ore Deposits

[0063] As noted above, the benches are preferably defined such that the adjacent overburden and deposit combination is in a range from 50 to 150 feet in height H. Where the layer deposits are spaced in close interval of less than 50 feet, a bench can be defined where there is an intermediate deposit layer within the overburden.

[0064] In such case, selected blasting techniques known in the art are employed to blast the overburden 31 atop the intermediate layer 30i as well as below the intermediate deposit layer. Preferably, a bulldozing operation first removes the upper overburden above the intermediate deposit layer, the intermediate deposit layer is mined and removed, and then bulldozers are used to remove the lower portion of the overburden. The apron feeder may be transversely displaced to a location for receiving another section of upper loosened overburden and then transversely returned. Alternatively, the apron feeder may remain at the same location during removal of the intermediate deposit for both overburden removal operations.

[0065] For example, Figure 3B illustrates an intermediate deposit layer 30i within the overburden 31 adjacent to bench 24. The intermediate deposit layer 30i could, for example, be five feet thick having a forty feet of overburden all of which is disposed above the lower deposit layer 30 that is ten feet thick having forty feet of overburden sandwiched between the deposits 30i, 30. In such an example, the bench 24 is defined at the level of the lower layer deposit 30 at a depth of ninety-five feet below the top of the overburden of the intermediate deposit 30i. After blasting to loosen both portions of the overburden 31L in section S_1, bulldozers are then used to first push the upper forty feet of overburden onto the apron feeder 150 stationed therebelow and the five foot thick intermediate deposit 30i is then removed. Bulldozers then remove the remaining forty feet of overburden lying atop the lower layer deposit 30 which permits the mining of the lower deposit material.

[0066] After the overburden atop intermediate deposit 30i is removed through the dozing operation, the apron feeder is preferably transversely moved along the bench where a next section S_2 of blasted overburden is removed through a bulldozing operation while the deposit is removed from the first five foot thick upper deposit layer 30i. Thereafter, the bulldozers and apron feeder can be returned to the first site S_1 to remove the lower forty feet of overburden 31L disposed on the lower deposit layer 30.

[0067] The return of the apron feeder to finish overburden removal may be after several sections of overburden atop intermediate deposit 30i are removed. Alternatively, a second set of dozers and a second apron feeder may be used on the same bench 24 to follow the removal of the intermediate deposit 30i. The second set of dozers and second apron feeder would then remove the lower forty feet of overburden to permits a second mining operation to proceed with respect to removing the lower deposit layer 30, preferably using a second set of deposit removal equipment. In either case, the transverse mobility of the apron feeders greatly facilitates the efficiency of the operation.

[0068] Where the layer deposits are spaced at an interval of more than 150 feet, a bench can be defined where there is no deposit layer of mineral ore

within the overburden. In such case, after blasting and removal of the loosened overburden by dozing it into the apron feeder, no mining operation is required on that bench.

[0069] The movement of the bulldozers and apron feeders along the benches allows for efficient removal of both overburden and mineral deposits simultaneously, without extended equipment down time.

[0070] Apron Feeder Equipment

[0071] As best seen in Figures 4, 5A-5E, and 6A-6D, a preferred apron feeder assembly 150 is shown which is designed specifically for efficient implementation of mining operations in accordance with invention by facilitating transverse apron feeder movement. The apron feeder assembly includes a feed end 152, which receives material (overburden) that is conveyed to an outlet end 156 thus defining a conveying direction of the feeder. The apron feeder 150 is preferably comprised of 180 flights 146, each ten inches wide, which are horizontally pivotally connected in a continuous loop. This loop defines a conveyor with a top surface 146a that transports material from the feed end 152 to the outlet end 156 of the apron feeder 150, and a bottom surface 146b. The inlet end 152 of the apron feeder is conventionally enclosed within a strong metal box 155 called a "dog house" to protect it from impact and from compacted surrounding material during operation.

[0072] The apron feeder 150 is mounted at a desired angle upon a selectively configured frame 154 such as shown in Figure 4. The desired angle is preferably 14 to 15 degrees above horizontal. Preferably, the frame 154 supports the apron feeder so that its outlet end 156 is located at a height sufficient to fill a dump truck 180 positioned beneath the outlet end 156. Alternatively, as depicted in Figure 5C, a sizer 185 can be attached to the outlet end 156 of the apron feeder 150 to reduce large size chunks of overburden to a manageable size for conveying by a conveyor system 210 which is then disposed beneath a conveyor loading apparatus 186 associated with the sizer 185.

[0073] Where a conveyor system is used, the conveyor system 210 then transports the overburden from the active mining site such as illustrated in

Figure 1B. As illustrated in Figure 3A, the conveying system 210 can extend along a bench 22 so that the entire apron feeder 150 and sizer 185 combination can simply move transversely from in front of a section S_1 to a subsequent section S_2 for a highly efficient overburden removal process without any alteration to the conveying system. Other alternatives for transporting overburden material from the apron feeder may be used alone or in combination with the examples provided above.

[0074] The frame 154 preferably includes a selectively defined opening for access by a transport crawler 190 in a direction that is transverse to the conveying direction of the apron feeder 150. As best seen in Figures 5A, 5B, and 5E, the transport crawler 190 preferably has treads 192 or other motive means suitable for the strip mining environment and preferably includes a vertically displaceable support bed 194.

[0075] In lieu of having a separate crawler 190, the apron feeder assembly 150 can include a dedicated transport crawler attached thereto. In either case, the crawler 190 may optionally have a relatively rotatible support bed 194 associated with the transport crawler 190 to enable the crawler treads 192 to be turned relative to the apron feeder 150 to be in either a transverse or an aligned orientation with respect to the conveying direction of the apron feeder 150. With such an option, the transport crawler 190 can move the apron feeder assembly 150 in a conventional manner as is done with the apron feeders shown in Figures 2A and 2B and also move the apron feeder assembly 150 in a transverse manner by changing the directional orientation of the crawler treads.

[0076] When the apron feeder assembly 150 is to be relocated on a bench, the transport crawler 190 preferably travels beneath the apron feeder assembly 150 in the space defined by the frame 154, lifts the apron feeder assembly 150 on the support bed 194 above the bench and transversely repositions the apron feeder assembly 150 along the bench to a new location where it is lowered onto the bench. Preferably the frame 154 is structured so that the transport crawler 190 engages the apron feeder 150 directly below the center of mass of the entire apron feeder assembly 150. As shown in Figure

5C, where the apron feeder 150 is used in connection with the sizer 185, a similar crawler 188 is preferably provided to transversely relocate the sizer 185 and its associated conveyor loading apparatus 186.

[0077] As best seen in Figures 5C and 5D, the apron feeder assembly 150 is preferably used in connection with massive extension walls 170, 172 and a hydraulic assembly housing 174 having skids that permit them to be dragged by a bull dozer for placement at a desired location. Unlike conventional apron feeder walls which are semi-permanently erected such as illustrated in Figure 2A, the walls 170, 172 are selectively designed with a large foot print and sufficient weight to remain immobile during the dozing operations used to feed the apron feeder, while remaining sufficiently mobile and easily transportable for quickly establishing a subsequent apron feeder operational site.

[0078] The hydraulic assembly housing 174 provides the motive power to the apron feeder and typically includes both hydraulic and electrical equipment for operation the apron feeder. The hydraulic assembly housing 174 may be designed with sufficient strength and bulk to serve as one of the extension walls. However, it is preferred to provide an extension wall disposed in between the dozing operations and hydraulic assembly housing 174.

[0079] As shown in Figure 5D, preferably, a signal light 176 is provided which is controlled by the apron feeder operator having red and green lights. The signal light is advantageously used to signal to the operators of the bull dozers which load the apron feeder; a green light indicating when the feeder is ready to receive material and a red light indicating no loading should occur. Typically a red light indication will be given when there is a change of trucks at the outlet end.

[0080] For apron feeder operation, the walls 170,172 are positioned proximate the inlet end 152 of the apron feeder 150 and serve to protect the apron feeder operators and to assist in the formation of the natural hopper 40 formed during the dozing operations. The wall 170 also serves to protect the transport crawler 59 and to keep clear the area beneath the apron feeder

frame 54 for the transport crawler to easily engage the apron feeder assembly 50 for transport.

[0081] Apron Feeder Self-Cleaning Mechanism

[0082] The dog box 155 provides protection to the front and sides of the feed end 152 of the apron feeder 150. However, during the dozing operation to load the feeder, some material spills into a gap 162 defined between the apron feeder's feed end 152 and the dog box 155. Although such spillage is a lesser problem when the apron feeder is loaded with dry material, material build up is exponentially increased where the apron feeder is loaded with wet sludge or slurry material. Typically the problem of such spillage build up results in periodic stoppage of apron feeder operation to remove built up spillage.

[0083] As illustrated in Figures 6A-6C, in order to prevent or reduce the buildup of overspill material, the apron feeder 150 is provided with a self cleaning mechanism that includes a spillage catching scroll 140, a grizzly element 142, and a wiper element 144. The scroll element 140 comprises a strong metal sheet that is mounted to the dog box at the gap 162 and extends substantially parallel to the apron feeder fights 146 in front of the feed end of the feeder for a selected distance parallel the bottom surface 146b of the feeder 150. Preferably the scroll 140 is approximately 22 feet long.

[0084] The grizzly element 142 is mounted on one of the feeder flights 146 to define a row of metal teeth spanning transversely across the conveying surface. An associated wiper element 144 is mounted on one of the feeder flights 146 at a selected distance behind the grizzly 142 to define a raised blade spanning transversely across the conveying surface.

[0085] In operation, as the apron feeder is loaded, material that spills through the gap 162 is caught by scroll 140 where it collects. With each complete revolution to the apron feeder, the grizzly 142 travels along the scroll and breaks up the collected overspill material caught by the scroll. The wiper 144 then follows the grizzly 142 to push the broken up overspill back up onto the top surface 146a of the feeder 150. After the wiper 144 passes, the scroll 140 has been cleared to again begin to catch spillage into the gap 162.

[0086] More than one grizzly/wiper set can be provided so that the scroll is cleared multiple times during one complete revolution of the apron feeder. Preferably, two evenly spaced grizzly/wiper sets are provided, as illustrated in Figures 6A and 6B.

[0087] Dozer/Apron Feeder Overburden Removal

[0088] With reference to Figures 7A-7E and 8, details of a preferred dozer/apron feed overburden removal operation are illustrated. With the apron feeder 150 disposed on the bench 22 in front of the loosened section S_1 of overburden 29L, the dozers 200 perform an initial push to form a slope 34 and natural hopper 40. The dozers push an uppermost layer of overburden 29L1 towards the apron feeder150 to form the slope 34 between the overburden section S_1 and the bench 22. The slope 34 angles downward to form overburden chute walls 39 on either side of the apron feeder 150. These chute walls 39 define a natural hopper or chute 40 sized and shaped to direct dozer-pushed overburden 29 to the inlet of the apron feeder 150.

[0089] Once the dozers 200 form the natural chute 40, the dozers 200 begin the task of removing the overburden 29L proceeds in removal of successive layers 29L2, 29L3, and 29L4 as illustrated in Figures 7C-E. Gravity provides assistance in this part of the operation since the angle of repose of the material being pushed in the natural hopper 40 is such that the material naturally slides down the slope 34 to the apron feeder 150. However, for the lower most overburden layer 29L4, the dozers 200 may need to push the overburden material upward to inlet of the apron feeder. This is somewhat dependent on the thickness of the underlying deposit.

[0090] Figures 9-14 illustrate several alternative methods for dozing the overburden 29L into the apron feeder 150. The general objective to maximize the efficiency of the dozers 200 which generally means to keep the dozers in constant motion. Accordingly, communication between the apron feeder, supervisors, dozer operators, and other personnel is desirable to achieve for maximum efficiency.

[0091] Figure 9 shows a first embodiment for dozing loosened overburden 29L in a section S_1 into the apron feeder 150, in which several

dozers 200 operate in discreet zones 50, 52, 54, 56, and 58. The dozers 200 in zones 50, 54, and 58 drive the overburden 29L to a staging area 59, where the dozers 200 operating in areas 52 and 56 take turns dozing the overburden 29L through the staging area 59 into the chute 40 to the apron feeder 150. The dozers 200 in zones 50, 54, and 58 preferably advance while the dozers in zones 52 and 56 retreat and vice versa to provide a system of continuous operation for all of the dozers.

[0092] Figure 10 shows a second embodiment for dozing loosened overburden 29L in a section S_1 into the apron feeder 150, in which the dozers 200 in zones 52 and 56 doze the overburden 29 to the staging area 59 and dozers 200 in zones 50, 54 and 58 doze the overburden down the chute 40 to the apron feeder 150. Again, the dozers 200 in zones 50, 54, and 58 preferably advance while the dozers in zones 52 and 56 retreat and vice versa to provide a system of continuous operation for all of the dozers.

[0093] Figure 11 shows a third embodiment for dozing loosened overburden 29L in a section S_1 into the apron feeder 150, in which the dozers 200 in zones 61 and 63 feed overburden 29L to dozers 200 in zones 60, 62, 64, and 66. The dozers 200 in zones 60, 62, 64, and 66 in turn feed overburden 29L into a slot 69. Another dozer 200 then dozes all of the overburden 29L in the slot 69 down the chute 40 to the apron feeder 150. The third embodiment's advantage is that it allows for more dozers 200 to work in concert with each other over a wider mining area 36. Further, because only the dozer 200 in the slot 69 feeds the apron feeder 150, there is little chance of a traffic jam at the slot 69.

[0094] Figures 12A-H illustrate iterative steps of a fourth embodiment for dozing loosened overburden 29L in a section S_1 to the apron feeder 150. This embodiment uses five dozers, one in each of four zones 70, 72, 74, and 76 and the fifth in a slot 75 to feed overburden 29L to the chute 40 and down to the apron feeder 150. The apron feeder 150 is illustrated loading dump trucks 180. Each truck 180 leaves the area once it is full of overburden 29L, and another takes its place.

[0095] In the step shown in Figure 12A, all dozers advance towards the slot 75, with the dozer 200 in zone 70 arriving in the slot 75 first, where it dumps its load of overburden. In the step in Figure 12B, the dozer 200 in zone 70 begins its retreat through its zone 70 to gather another load, and the dozer 200 in the slot 75 prepares to drive a load to the hopper 40. The other dozers in the zones 72, 74, and 76 advance. In Figure 12C, the dozer 200 in zone 74 has dumped its load of overburden and begins its run to pick up more overburden. The dozer 200 in zone 70 continues its run to pick up overburden, while the dozers in zones 72 and 76 advance.

[0096] In Figure 12D, the dozers in zones 70 and 76 advance and the dozers in zones 72 and 74 are still returning to pick up overburden. In Figure 12E, the dozers in zones 70, 74, and 76 advance while the dozer 200 in zone 72, having dumped its load of overburden, returns to pick up more overburden. In Figure 12F, the dozer 200 in zone 76 has dumped its overburden, and returns to pick up overburden, while the dozers in zones 70, 72, and 74 advance.

[0097] In Figure 12G, the dozer 200 in zone 76 retreats, while the others advance. Finally, in Figure 12H, the dozer 200 in zone 70 has dumped its load and returns for another, while the other dozers in zones 72, 74, and 76 advance. During these various advances through the zones, the dozer 200 in the slot 75 moves back and forth, driving the dumped loads into the natural hopper 40, with all dozers taking care not to interfere with one another and cause any work stoppage.

[0098] Figures 13A-H illustrate iterative steps of a fifth embodiment for dozing loosened overburden 29L in a section S_1 to the apron feeder 150. This embodiment uses four dozers, one in each of three zones 80, 82 and 84 and the fourth in a slot 85 to feed the natural hopper 40 leading to the apron feeder 150. The apron feeder 150 is illustrated loading dump trucks 180. Each truck 180 leaves the area once it is full of overburden 29L, and another takes its place.

[0099] The consecutive steps of dozer movements are shown Figures 13A-H. Figure 13A shows the dozers 200 in zones 80, 82, and 84 advancing to

the slot 85, and Figure 13B shows the same dozers further advanced towards the slot 85. In Figure 13C, the dozer 200 in zone 80 has dumped its load of overburden and is beginning its return for another load, while the dozers in zones 82 and 84 advance towards the slot 85. In Figure 13D, the dozer 200 in zone 82 begins its return for another load following the dumping of a load into the slot 85, while the dozer 200 in zone 80 continues its return run, and the dozer 200 in zone 84 advances.

[00100] In Figure 13E, the dozers in zones 80 and 84 advance, while the dozer 200 in zone 82 retreats for another load of overburden. In Figure 13F, the dozers in zones 80, 82 advance, while the dozer 200 in zone 84 begins its return for another load, having just dumped its load in the slot 85, and Figure 13G shows the further advance of the dozers following the step shown in Figure 13F. Finally, Figure 13H shows the dozers in zones 82 and 84 advance while the dozer 200 in zone 80 retreats to get another load of overburden, having just dumped its own load.

[00101] During these various advances through the zones, the dozer 200 in the slot 85 moves back and forth, driving the dumped loads into the natural hopper 40, with all dozers 200 taking care not to interfere with each other.

[00102] The various methods can be used in a single mining site. In addition, variants thereof may be used that employ more or less dozers 200. For example if one or more zones has a deeper cut of overburden 29 to remove, it may be advantageous to position more than one dozer in that zone, or split the zone into subzones. If too much overburden accumulates in a single dozer slot, and the dozer 200 therein falls behind, a staging area for two or more dozers may be more efficiently employed.

[00103] Apron Feeder Relocation

[00104] Once the dozers 200 remove the overburden from a section S_1, the apron feeder 150 is then moved to a new location, such as adjacent the next section of loosened overburden S_2. Figures 14A-I illustrate a preferred sequential procedure for moving the apron feeder 150 after the overburden removal operation is completed from section S_1.

[00105] As the dozers 200 are completing the dozing of the lowest layer of the overburden 29L of a section S_1 into the apron feeder 150 (Figure 14A), a single dozer 200 or other equipment cleans out overburden spillage on the right hand side of the apron feeder until it is clear as shown in Figure 14B.

[00106] Once the right hand side of the apron 150 is clear, a dozer 200 or other equipment removes the right hand wall 170 of the apron feeder 150. With the right hand wall 170 removed, a dozer 200 or other equipment removes further overburden spillage, Figure 14C, to completely clear right hand side of the apron feeder.

[00107] A dozer 200 then cleans away any overburden spillage about the left hand wall 172 and removes the wall 172 as shown in Figure 14D. Any remaining overburden spillage 89 adjacent the hydraulic housing 174 on the left side is then also removed as shown in Figure 14E. Thereafter, the hydraulic housing 174 is disconnected from the apron feeder 150, and a dozer 200 removes the housing 174 for final cleaning on the left hand side, as shown in Figure 14F. Finally, as shown in sequential steps 14G-I a transporter 190 moves in from the right of the apron feeder, lifts it and carries the apron feeder 150 to its new location, such as adjacent another section S_2 of loosened overburden whereat the hydraulic housing 174 and walls 170, 172 are reattached.

[00108] While specific embodiments of the invention are disclosed they are not limiting in nature. Those of ordinary skill in the art will recognize a variety of variations in parameters, equipment and processes which can be employed within the scope of the invention.

* * *

IPEA/US

What is claimed is:

1. An apron feeder assembly comprising:

an apron feeder having a feed end and an output end defining a conveying direction;

the apron feeder mounted on a frame at a desired fixed angular orientation with the feed end at a lower load position and the outlet end at a raised position; and

the frame configured with an open area thereunder for receiving a transport unit to transport the apron feeder in its fixed angular orientation in a direction transverse to the conveying direction of the apron feeder when the transport unit is positioned beneath the center of gravity of the apron feeder assembly.

2. The apron feeder assembly according to claim 1 further comprising a transport unit that includes a vertically displaceable member for lifting the apron feeder in advance of transporting it.

3. The apron feeder assembly according to claim 2 wherein the transport unit is attached to the apron feeder frame.

4. The apron feeder assembly according to claim 2 wherein the transport unit includes motive means for imparting movement in the transverse direction and a rotation assembly for reorienting the motive means with respect to the apron feeder to enable the apron feeder to be transported in a direction aligned with the conveying direction.

5. The apron feeder assembly according to claim 2 wherein the transport unit includes treads for imparting movement in the transverse direction.

6. A method of open pit bench mining of selected material deposits comprising:

defining a bench disposed in front of a material deposit layer with overburden disposed atop the material deposit layer;

AMENDED SHEET

providing an apron feeder having a feed end and an output end defining a conveying direction;

selectively loosening overburden atop the material deposit layer in areas adjacent said bench;

positioning the apron feeder at a first location on said bench in front of a first section of the material deposit layer where the overburden has been loosened such that the apron feeder's feed end is adjacent the material deposit layer and the apron feeder is oriented with its conveying direction substantially perpendicular to the material deposit layer;

bulldozing the loosened overburden onto the apron feeder's feed end to substantially uncover the first section of the material deposit layer; and

removing the deposit material from the substantially uncover first section of the material deposit layer.

7. The method according to claim 6 wherein the loosening is performed by selective blasting.

8. The method according to claim 6 further comprising relocating the apron feeder to a second location along the bench in front of a second section of the material deposit layer where overburden has been loosened and. bulldozing the loosened overburden onto the apron feeder's feed end to substantially uncover the second section of the material deposit layer.

9. The method according to claim 8 wherein the relocating the apron feeder to a second location along the bench is performed by laterally moving the apron feeder in a direction transverse to the conveying direction.

10. The method according to claim 8 contemporaneously implemented on multiple benches of different depths of an open pit mine.

11. The method according to claim 6 wherein the benches are defined adjacent to deposit layers and overburden having a height of between 50 to 150 feet.

12. The method according to claim 6 wherein the benches are defined having a width of about 100 feet adjacent to the respective deposit layers and overburden.

13. The method of claim 8 where the apron feeder has an associated transport crawler and associated left and right extension walls wherein the positioning of the apron feeder step includes:

moving the apron feeder with the transport crawler in a direction transverse the feeder's conveying direction to position the apron feeder at said first location; and

positioning the left and right extension wall sections adjacent to respective left and right sides of the apron feeder proximate the inlet end of the apron feeder when positioned at said first location.

14. The method of claim 13, wherein the relocating the apron feeder includes:

removing the extension walls from the sides of the apron feeder;

moving the apron feeder with the transport crawler in a direction transverse the feeder's conveying direction to position the apron feeder at said second location; and

positioning the left and right extension wall sections adjacent to respective left and right sides of the apron feeder proximate the inlet end of the apron feeder when positioned at said second location.

15. An apron feeder comprising:

a plurality of transport flights configured for travel in a continuous elongated loop having top and bottom sides and configured to convey materials on the top side from a feed end to an outlet end of the apron feeder;

a scroll element mounted at the feed end of the apron feeder configured to catch material spilling off in front of the feed end, said scroll element having an elongated flat portion extending beneath a portion of the bottom side of the loop of transport flights in a substantially parallel orientation;

a wiper element mounted on a transport flight configured to clean material caught by the scroll element as the wiper element moves from the bottom side to the top side of the loop with the flight to which the wiper element is mounted.

16. The apron feeder of claim 15, further comprising a grizzly element mounted on a transport flight and configured conveyor to breaks apart material caught on the scroll before the wiper element cleans the material from the scroll element.

17. The apron feeder of claim 16, wherein:

the grizzly element comprises a row of metal teeth spanning transversely across the flight on which the grizzly element is mounted; and

the wiper element comprises a raised blade spanning transversely across the flight on which the wiper element is mounted.

18. The apron feeder of claim 16, wherein a plurality of grizzly and wiper element sets are provided evenly spaced along loop of flights.

19. A method of using a bulldozer to push loosened overburden in a mining area onto the feed end of an apron feeder disposed on a bench adjacent to the overburden with an extension wall on either side of the apron feeder, by forming a natural hopper and substantially relying on gravity to create a flow of loosened overburden down the natural hopper into the apron feeder, the method comprising:

the bulldozer forming a natural hopper by:

pushing the loosened overburden to a preferred height against the extension walls to form natural hopper sidewalls; and

AMENDED SHEET

pushing the loosened overburden down the natural hopper between the sidewalls that define the natural hopper, toward the feed end of the apron feeder;

thereafter, continuously pushing loosened overburden from a mining area down the natural hopper into the apron feeder, using a plurality of coordinated bulldozers.

20. The method of claim 19 wherein the mining area has a width of approximately 150 feet to each side of the apron feeder, and a length of approximately 225 feet, and a traffic light mounted so that bulldozer drivers can see the light, which turns red when the apron feeder is not ready for loading, and green when the apron feeder is ready for loading.

21. The method of claim 19 wherein the plurality of bulldozers comprises four bulldozers, three bulldozers operating in three different zones to doze material into a slot area and one bulldozer operating to doze the overburden from the slot down the natural hopper into the apron feeder.

22. The method of claim 19 wherein the plurality of bulldozers comprises five bulldozers, three bulldozers operating in three different zones to doze material into a staging area between the zones and the natural hopper, and returning for another load of overburden and two bulldozers operating to doze the overburden from the staging area, down the natural hopper to the apron feeder.

23. The method of claim 19 wherein the plurality of bulldozers comprises five bulldozers, two bulldozers operating in two different zones to doze material into a staging area between the zones and the natural hopper, and returning for another load of overburden and three bulldozers operating to doze the overburden from the staging area, down the natural hopper to the apron feeder.

24. The method of claim 19 further comprising at least one traffic light to coordinate the movements of the bulldozers to minimize a bulldozer's number of stops.

25. The method of claim 19 further comprising traffic coordinators who coordinate the movements of the bulldozers to minimize a bulldozer's number of stops.

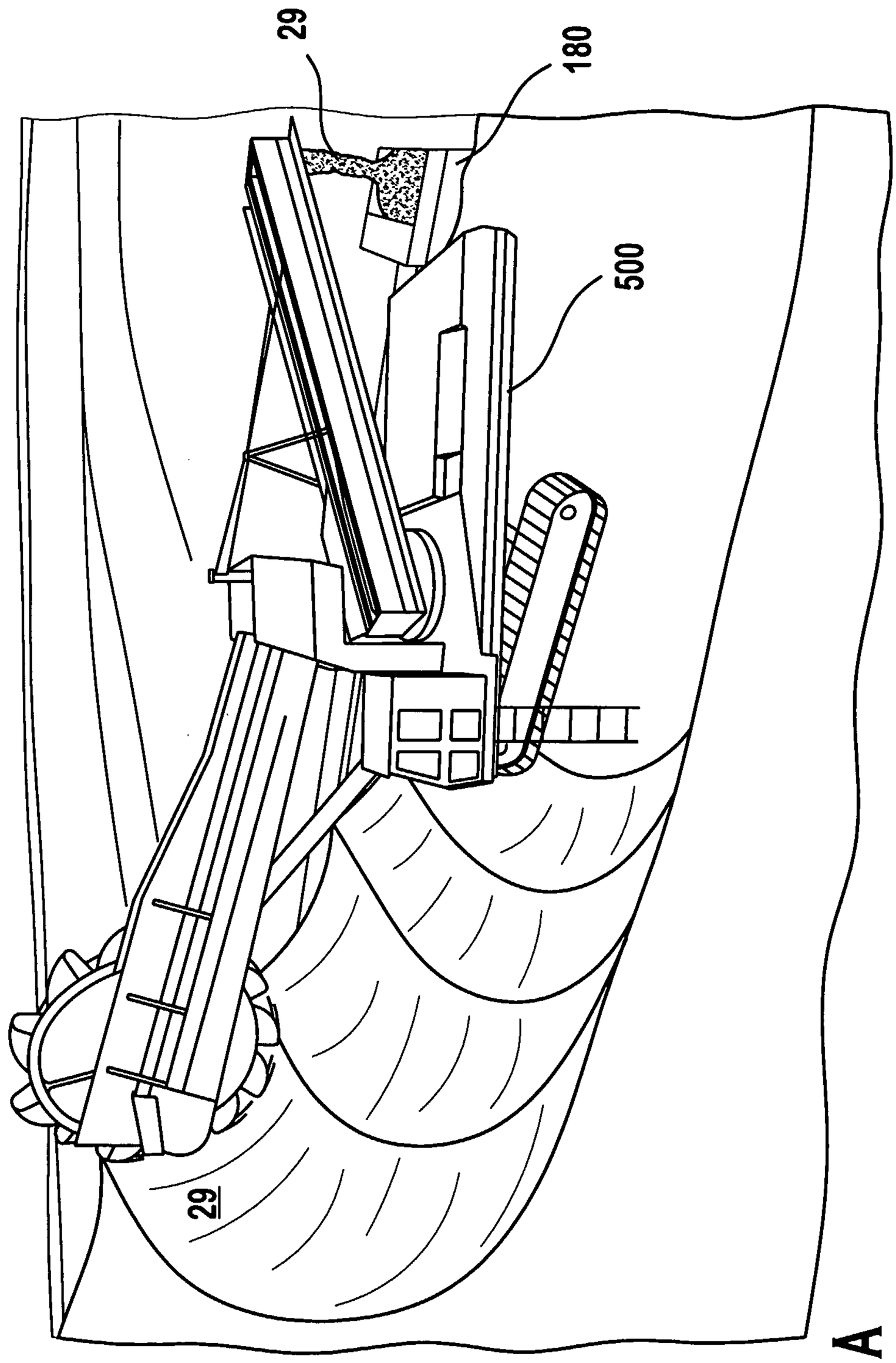

FIG. 1 A
(PRIOR ART)

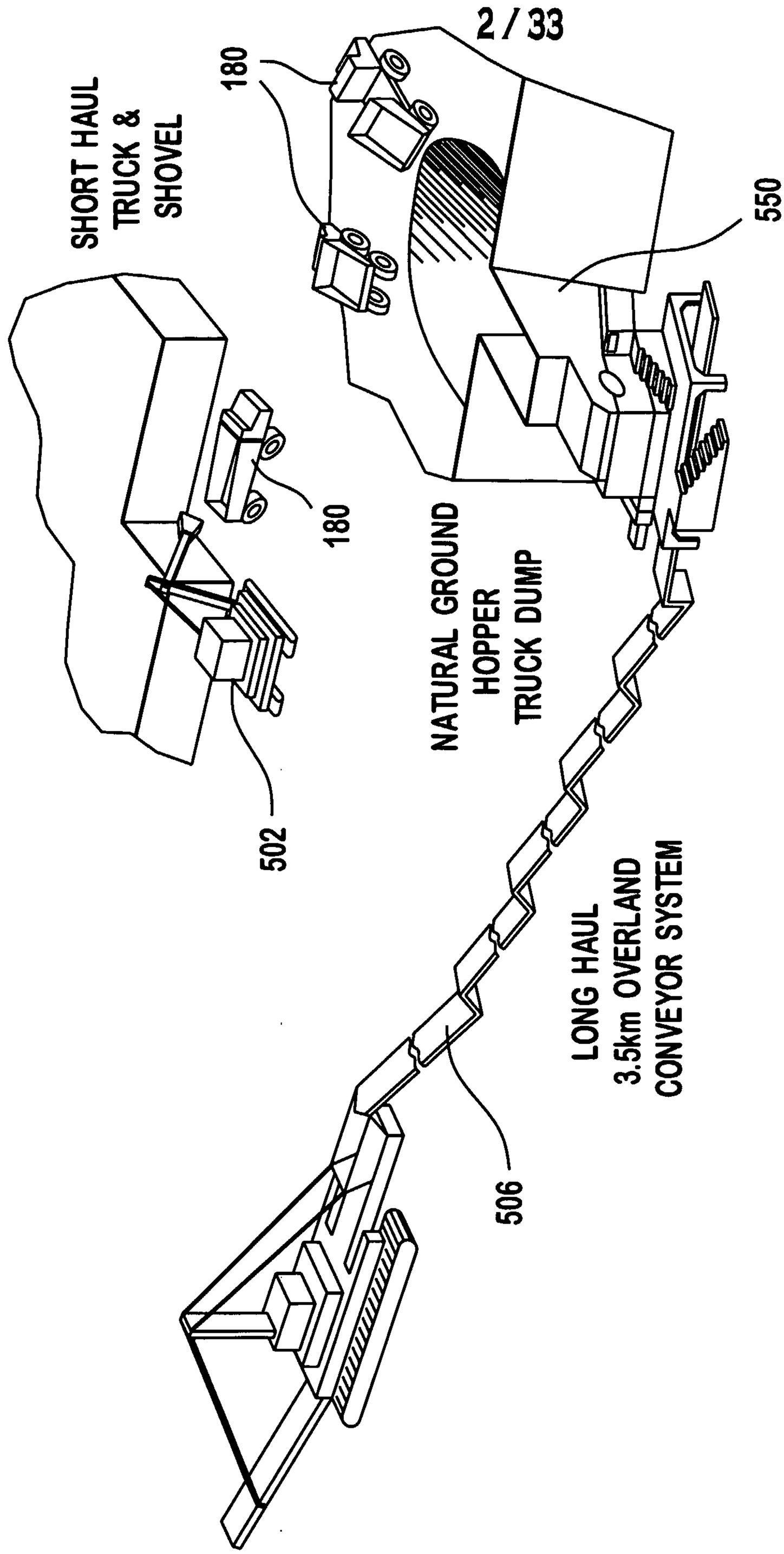

FIG. 1B
(PRIOR ART)

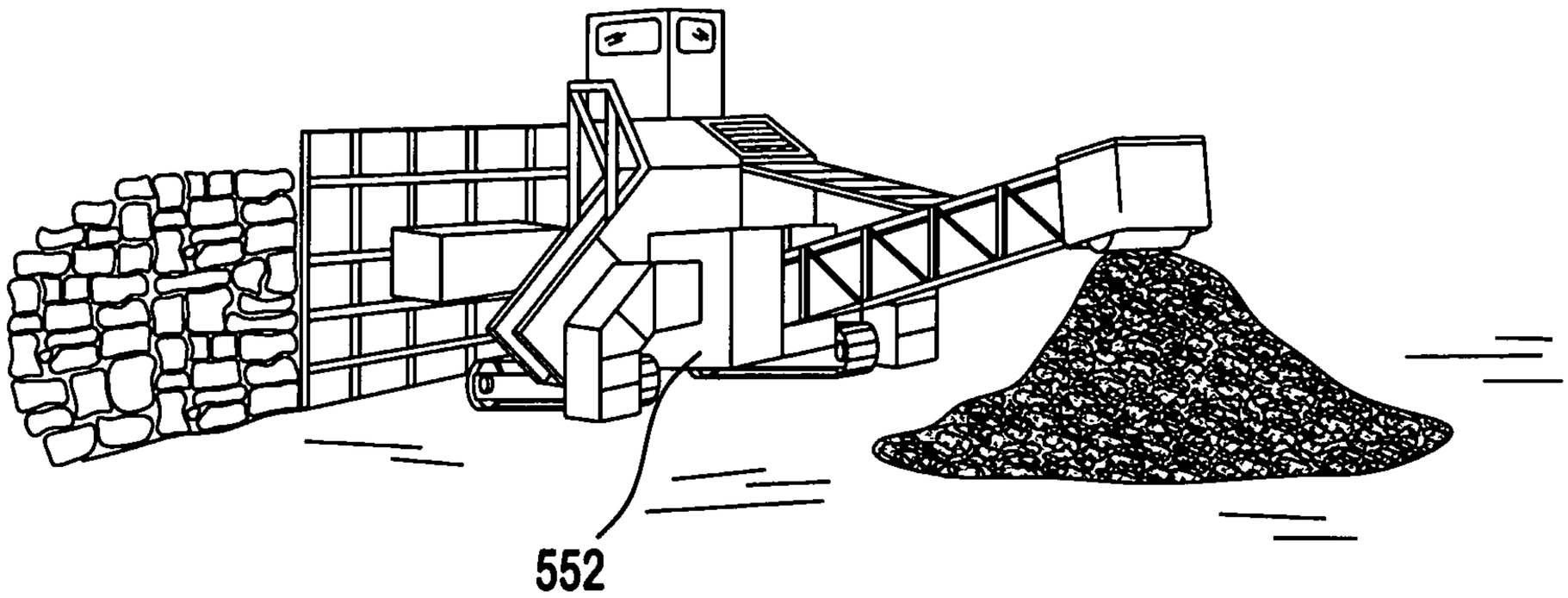

FIG. 2A
(PRIOR ART)

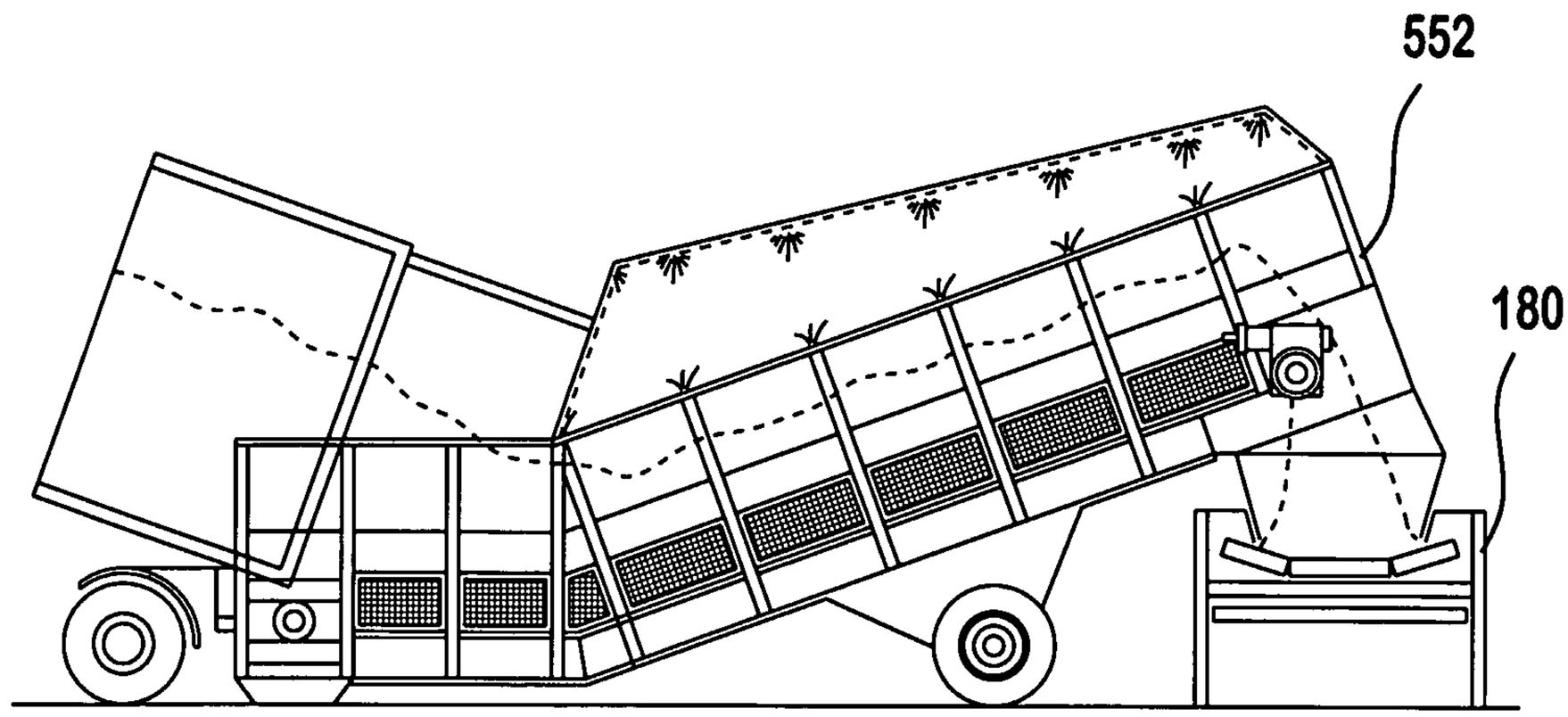

FIG. 2B
(PRIOR ART)

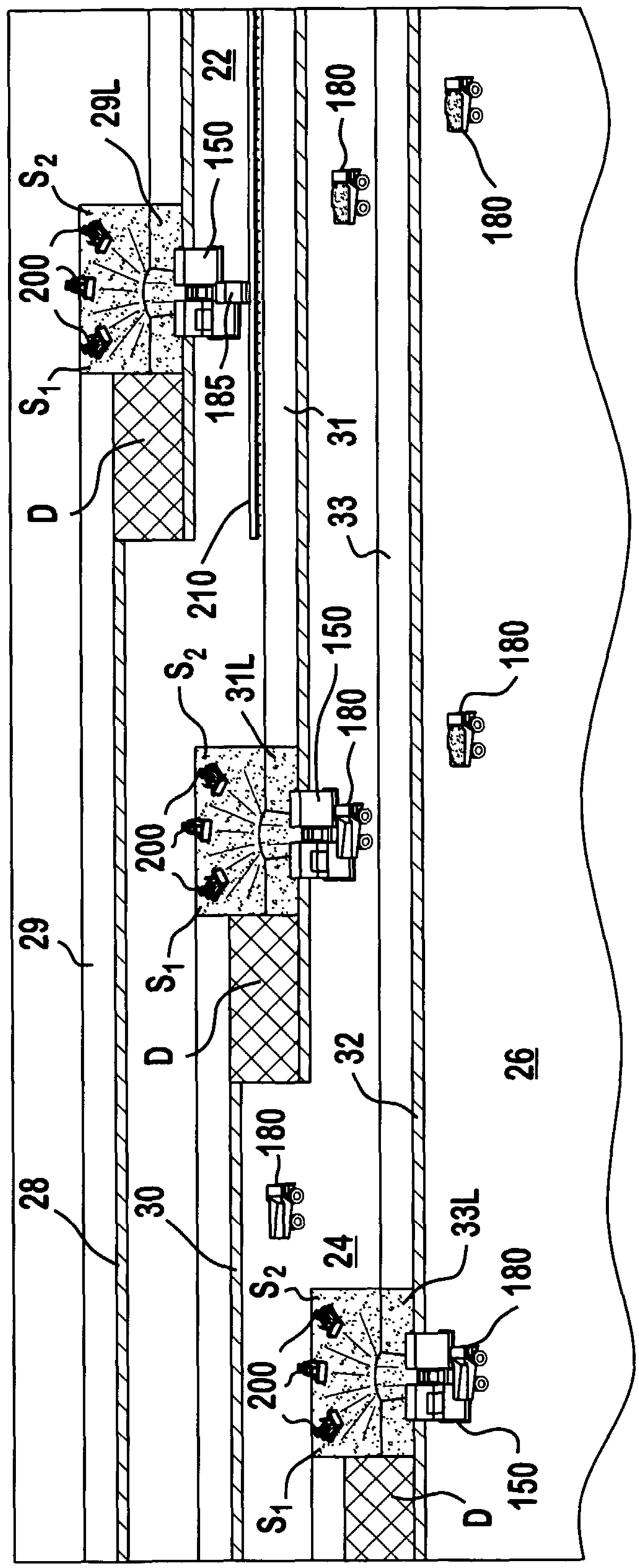
29L
S2
200
S1
D
150
22
185
180
31
33
210
S2
31L
150
180
200
S1
D
29
32
26
180
28
30
24
33L
S2
180
200
S1
D
150

FIG. 3A

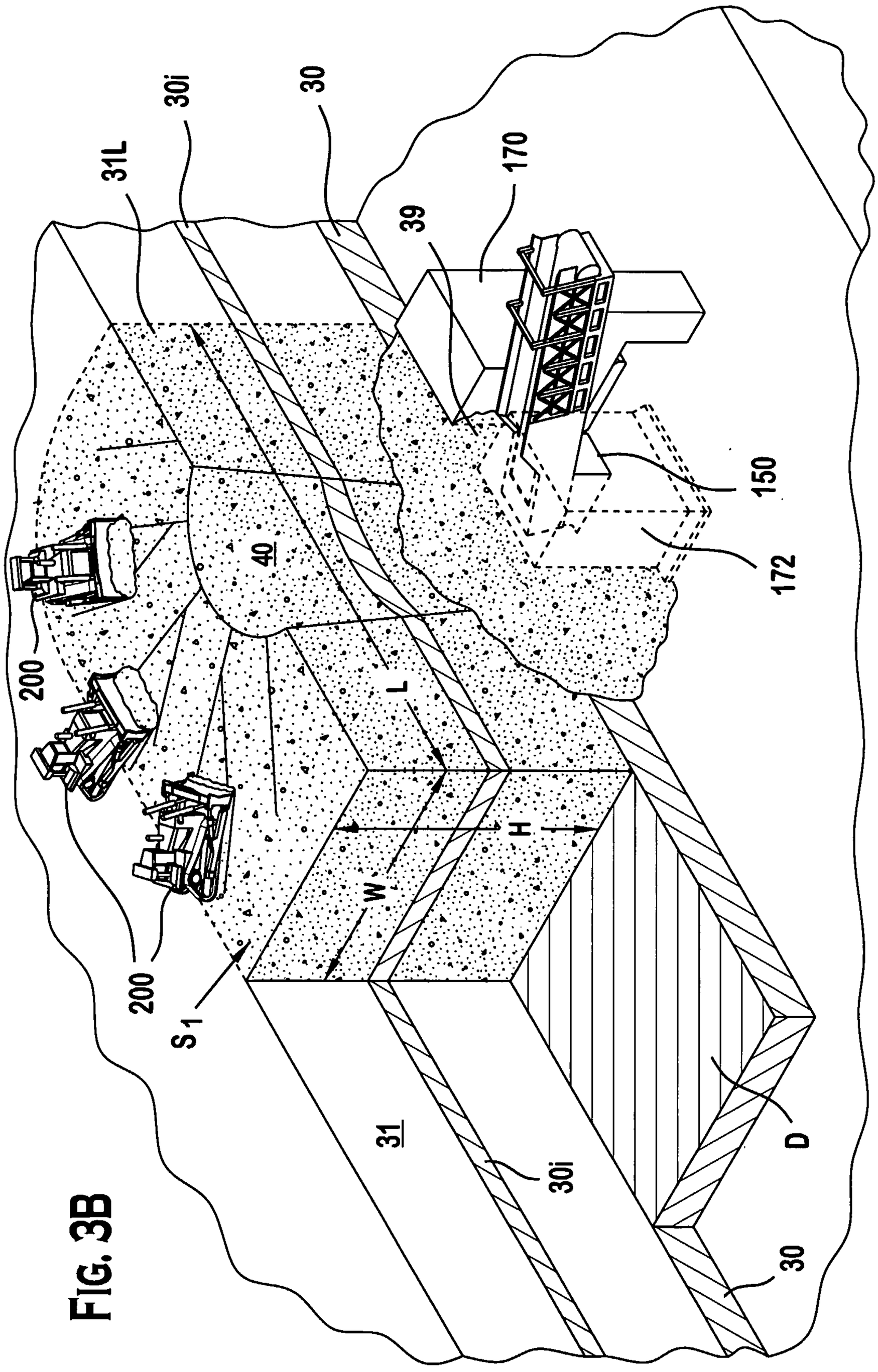

FIG. 3B

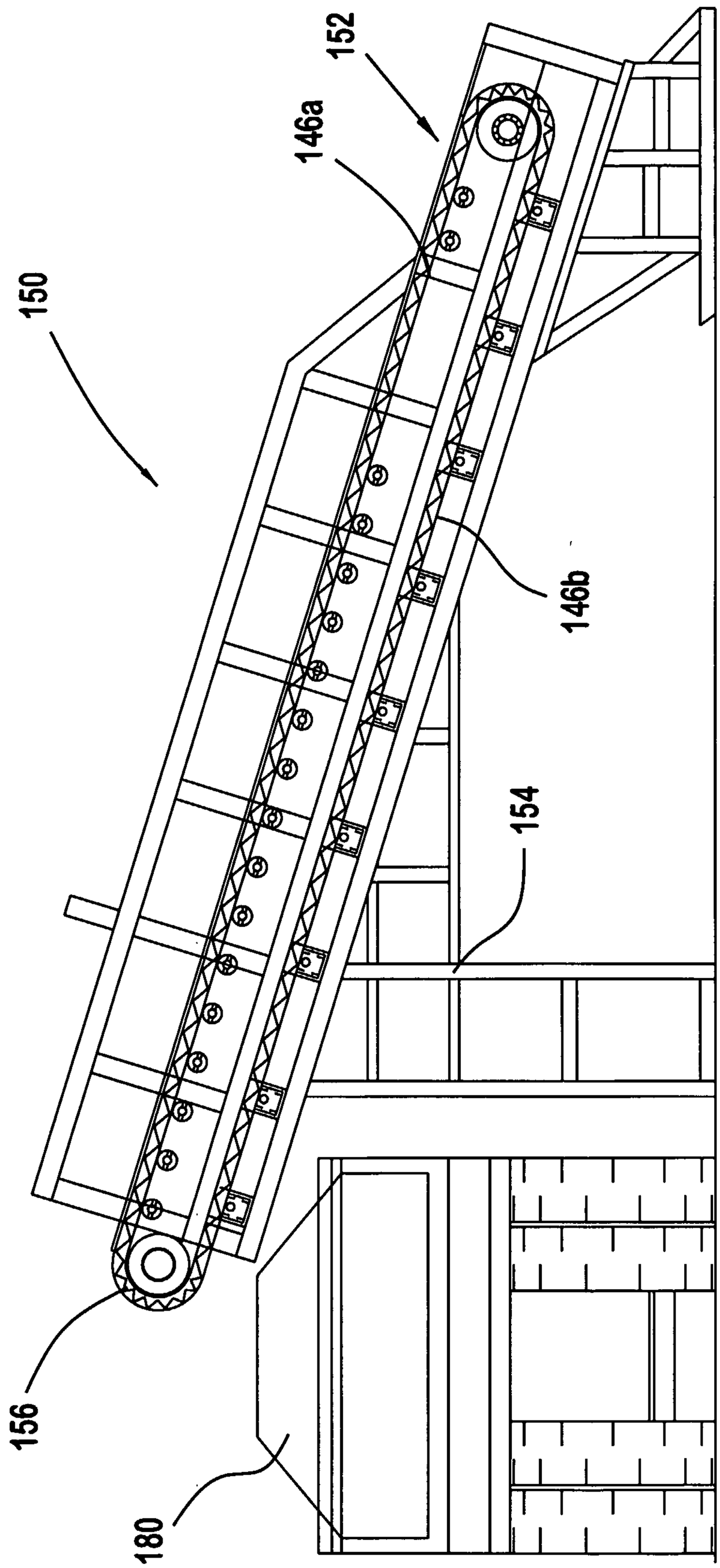

FIG. 4

FIG. 5A

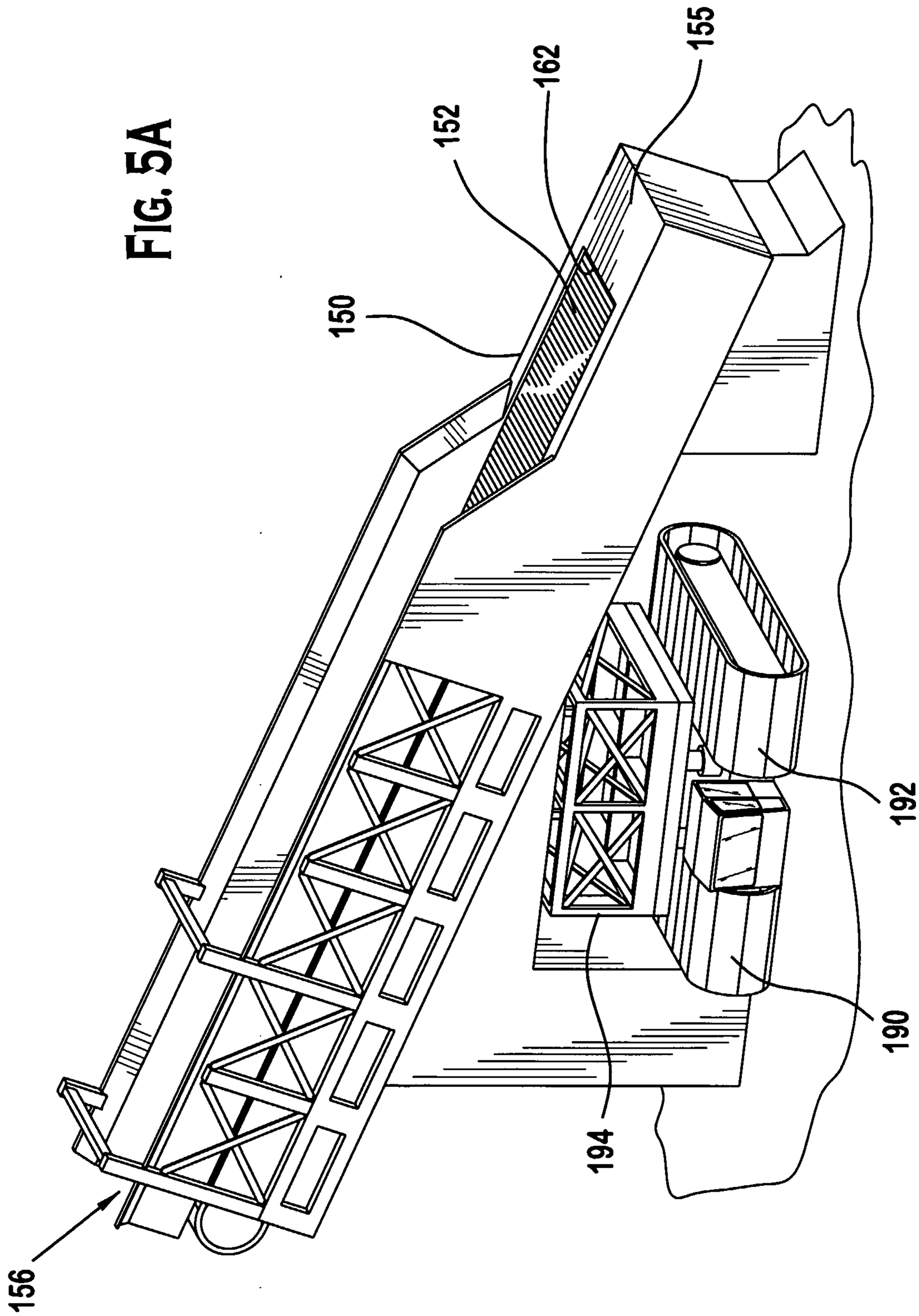

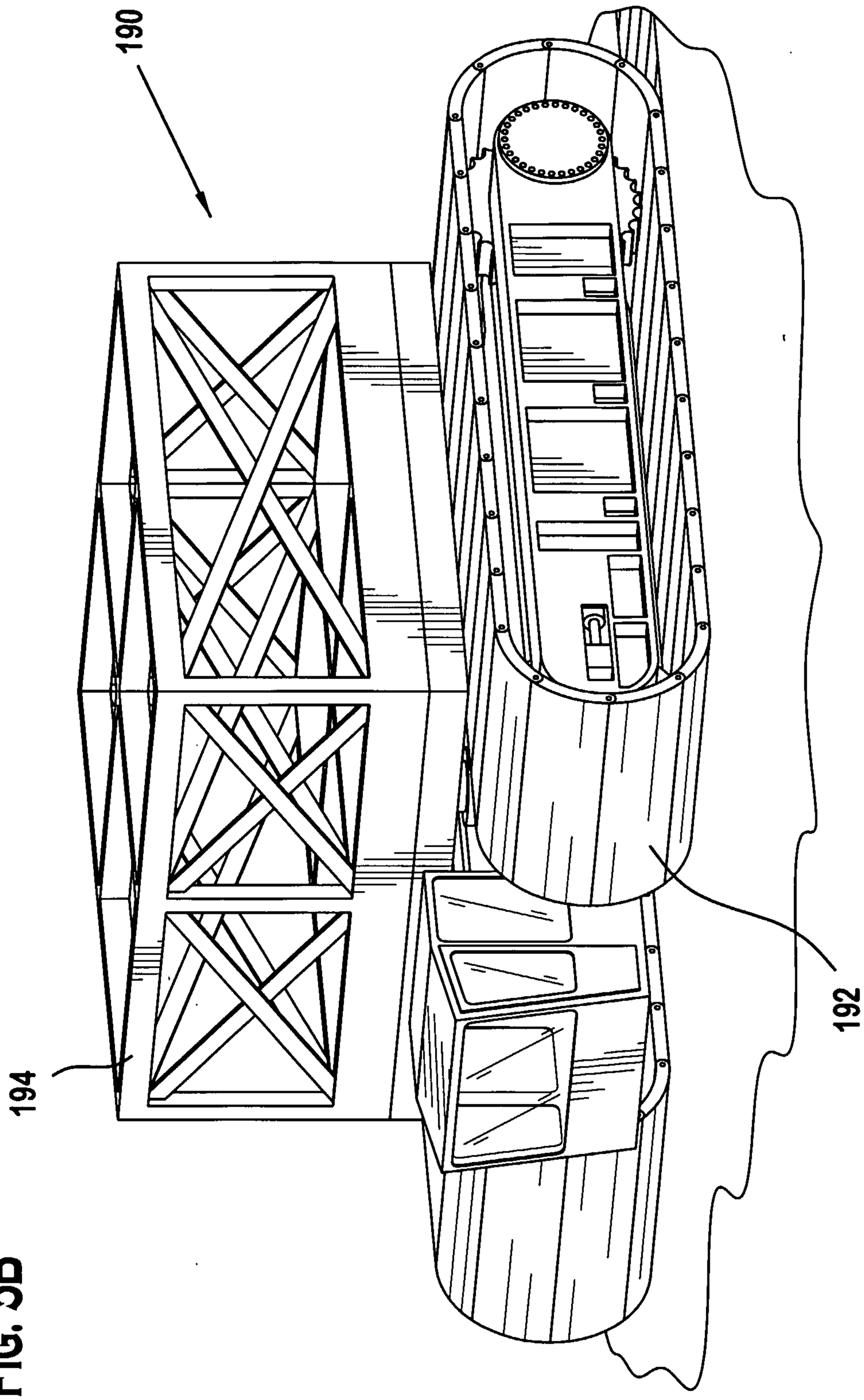

FIG. 5B

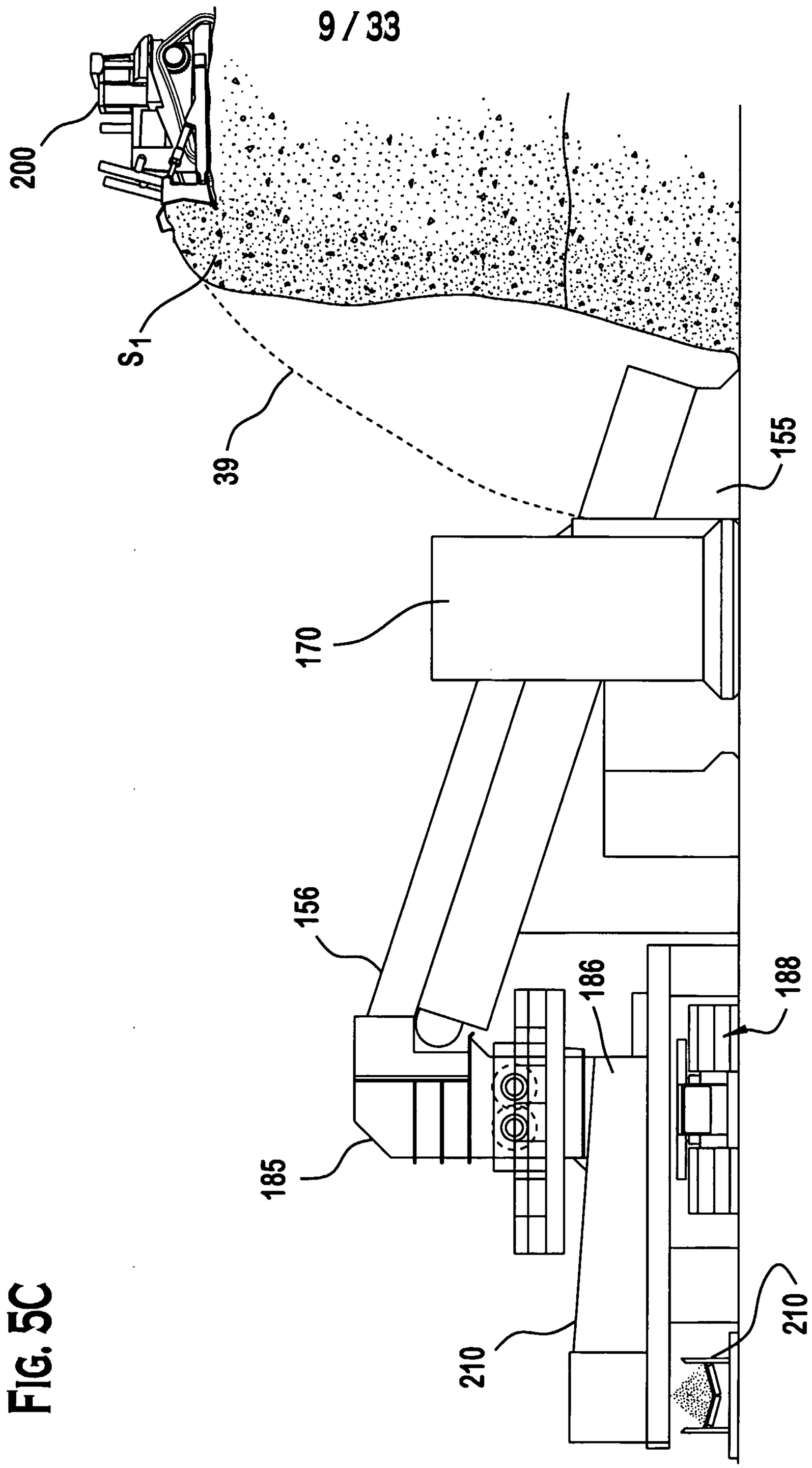

FIG. 5C

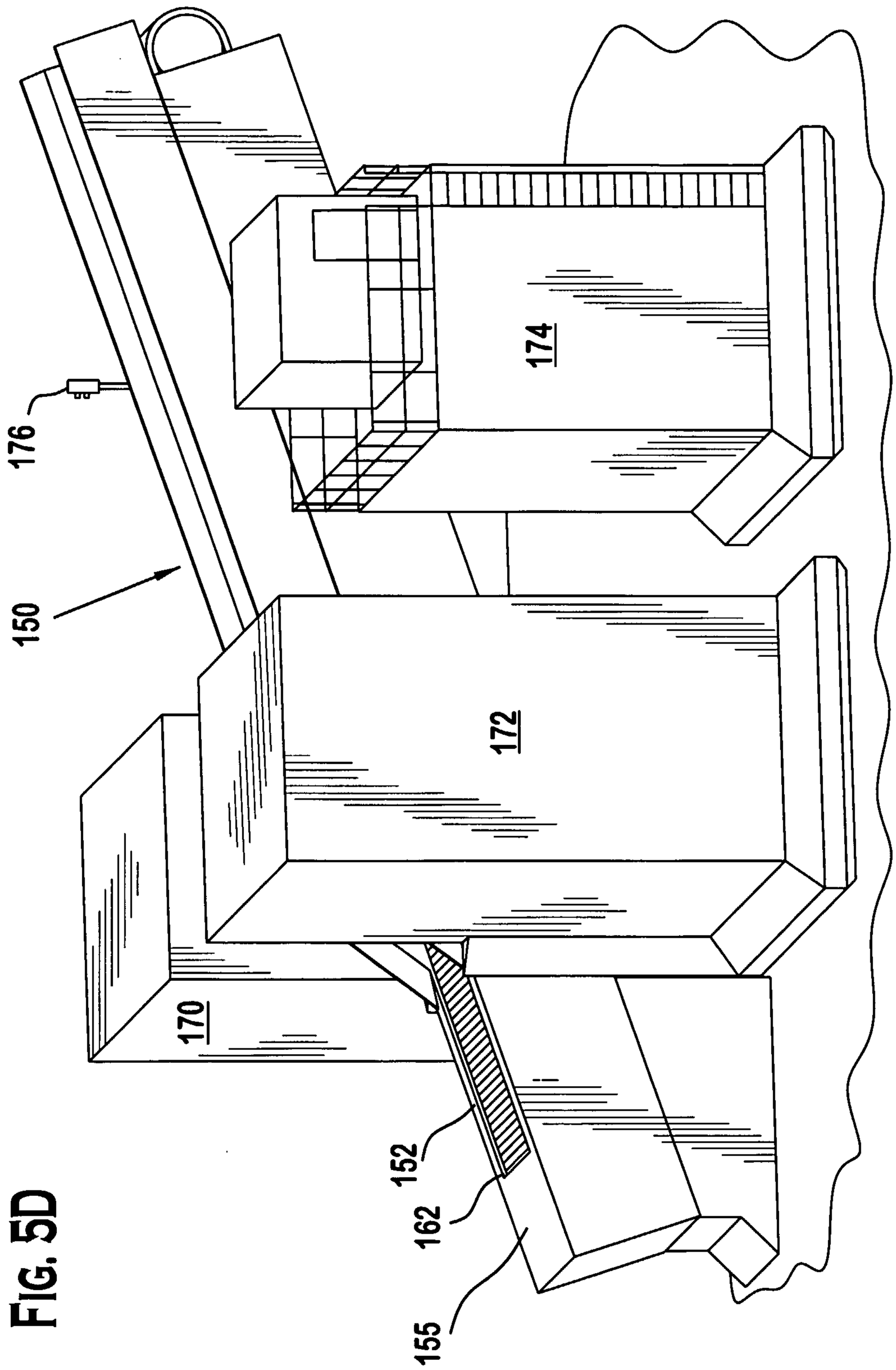

FIG. 5D

FIG. 5E

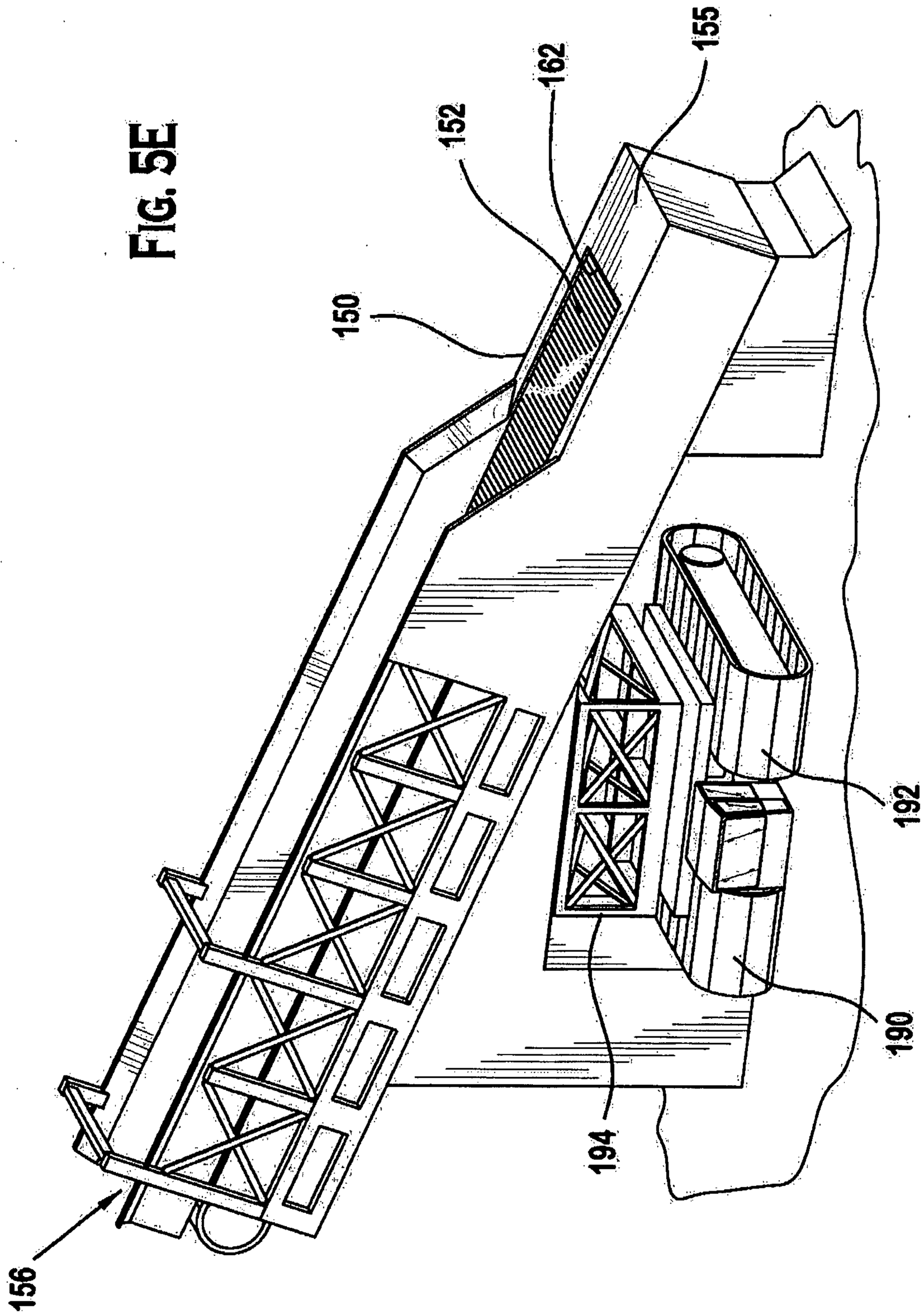

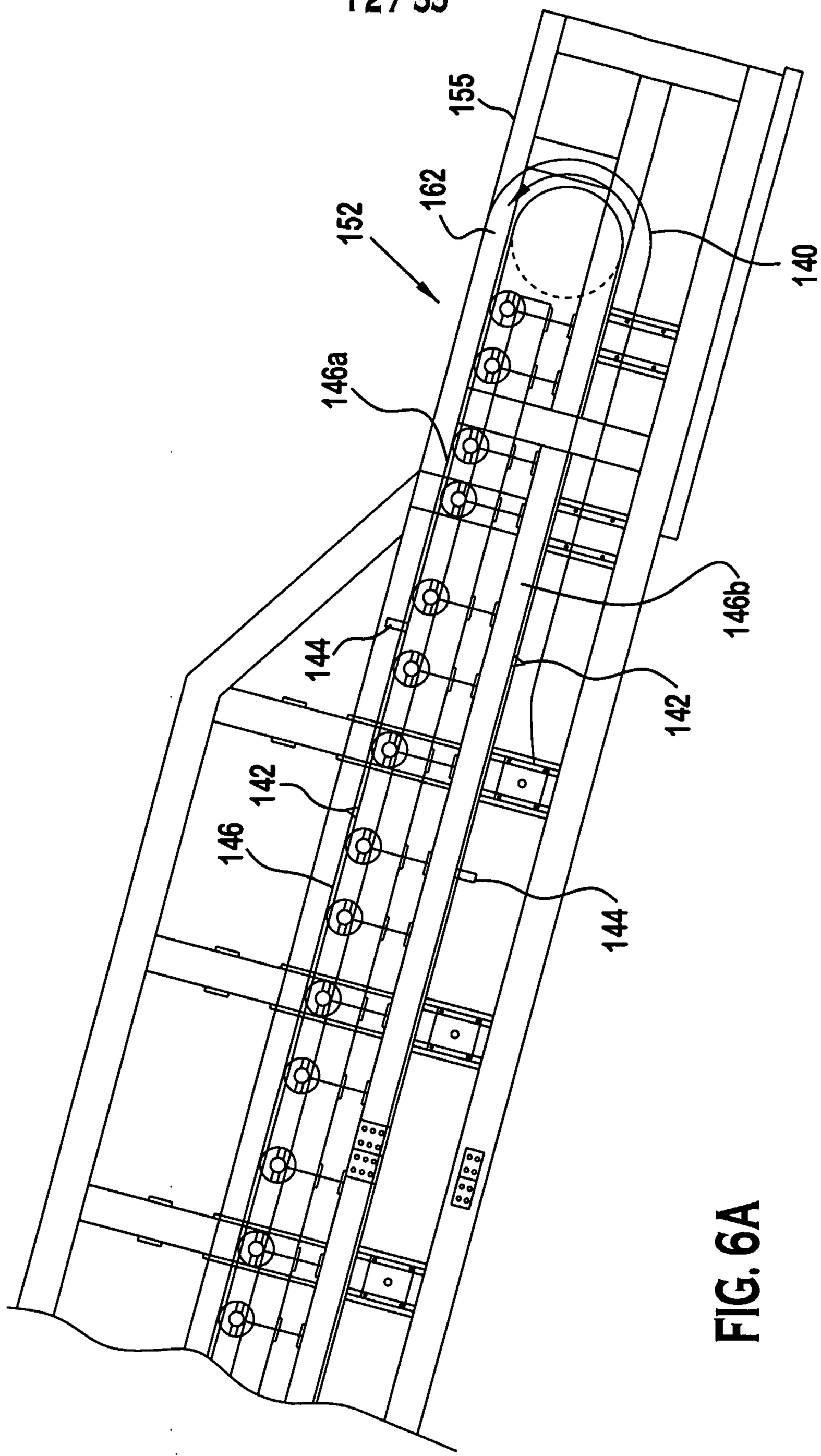

FIG. 6A

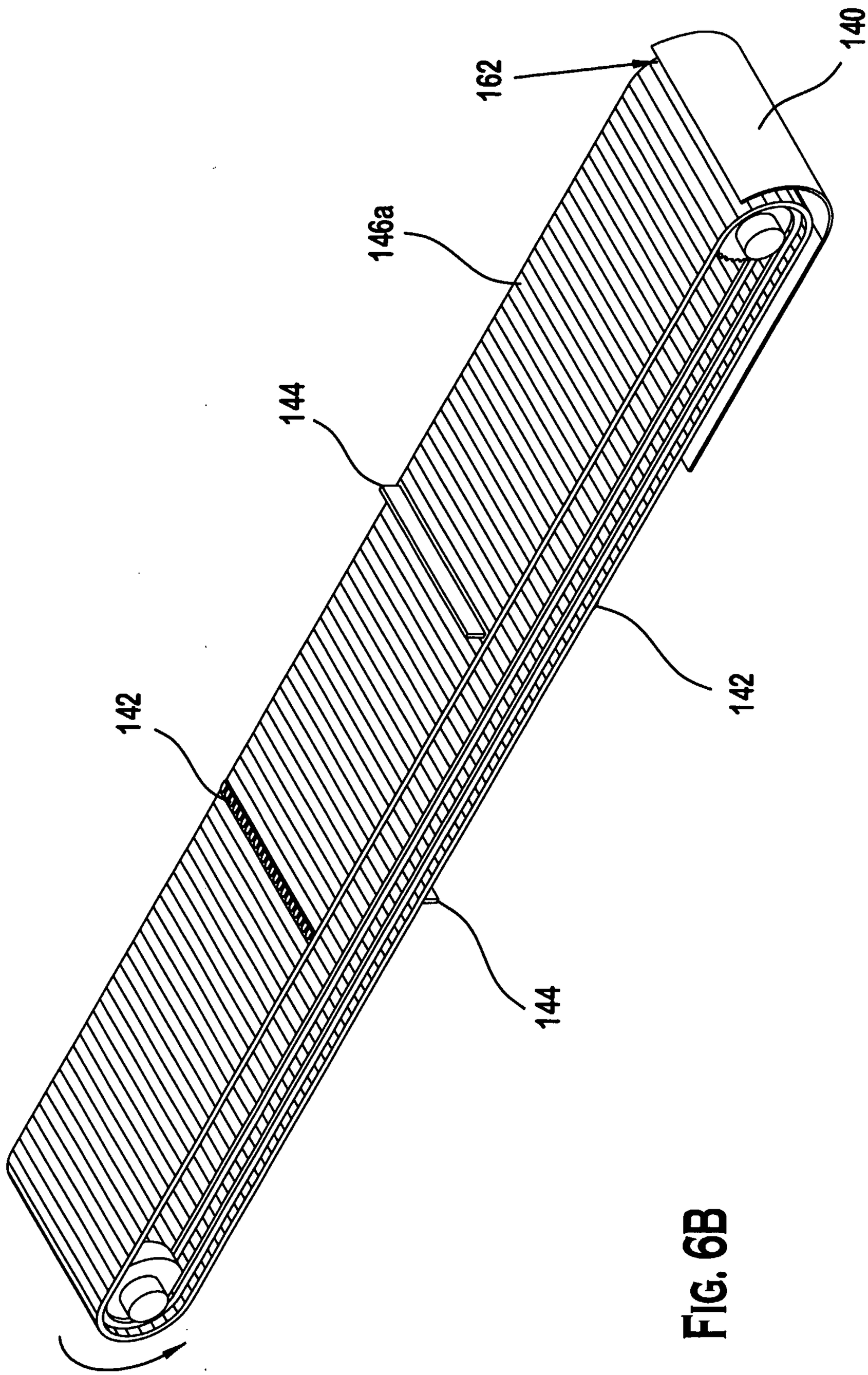

FIG. 6B

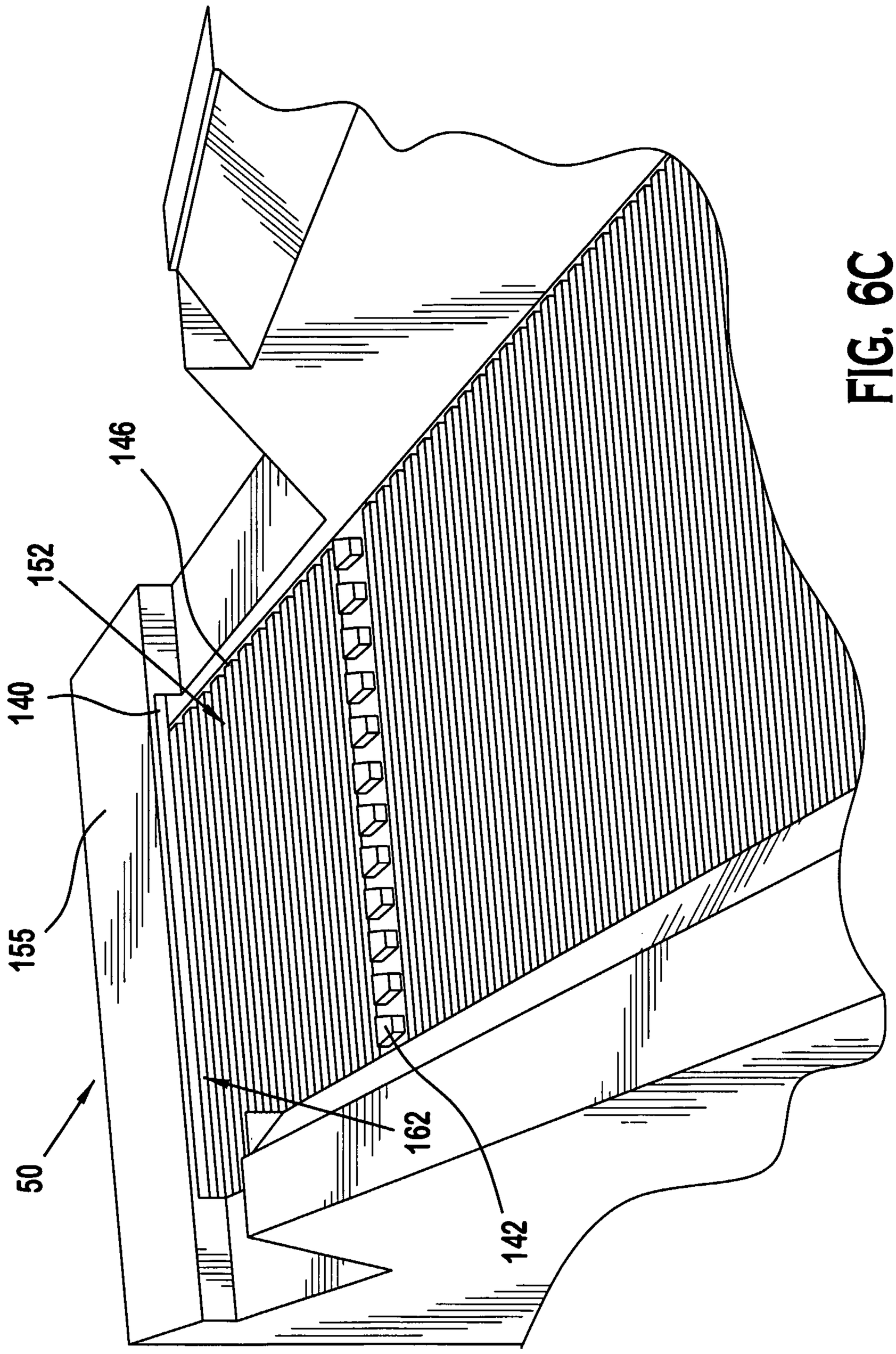

FIG. 6C

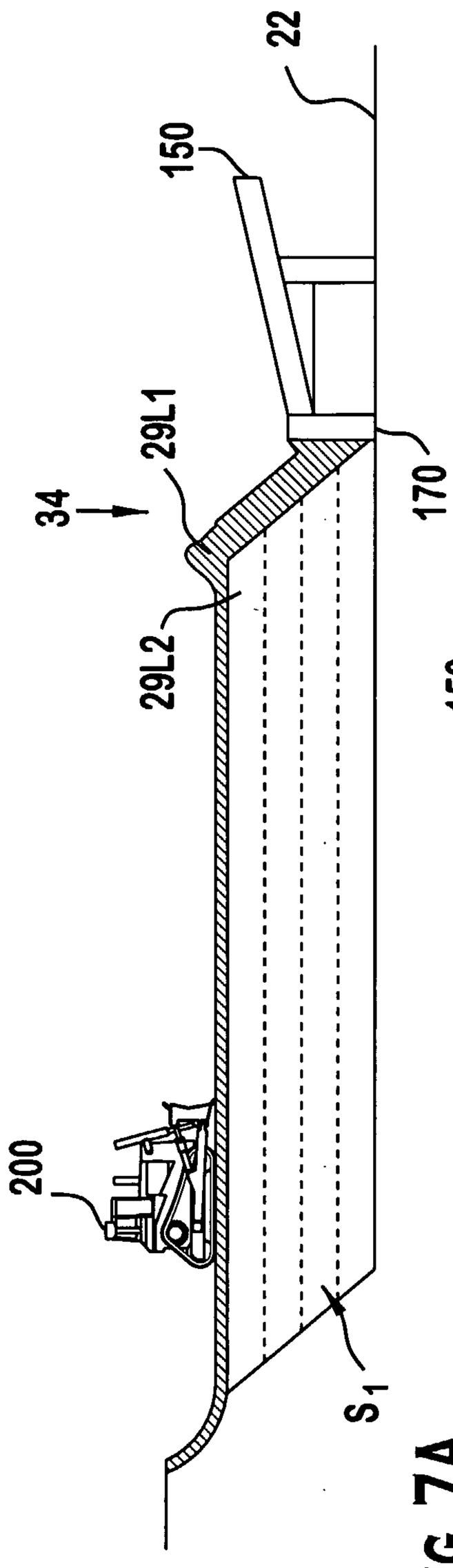
2
150
29L1
34
29L2
170
200
S1

FIG. 7A

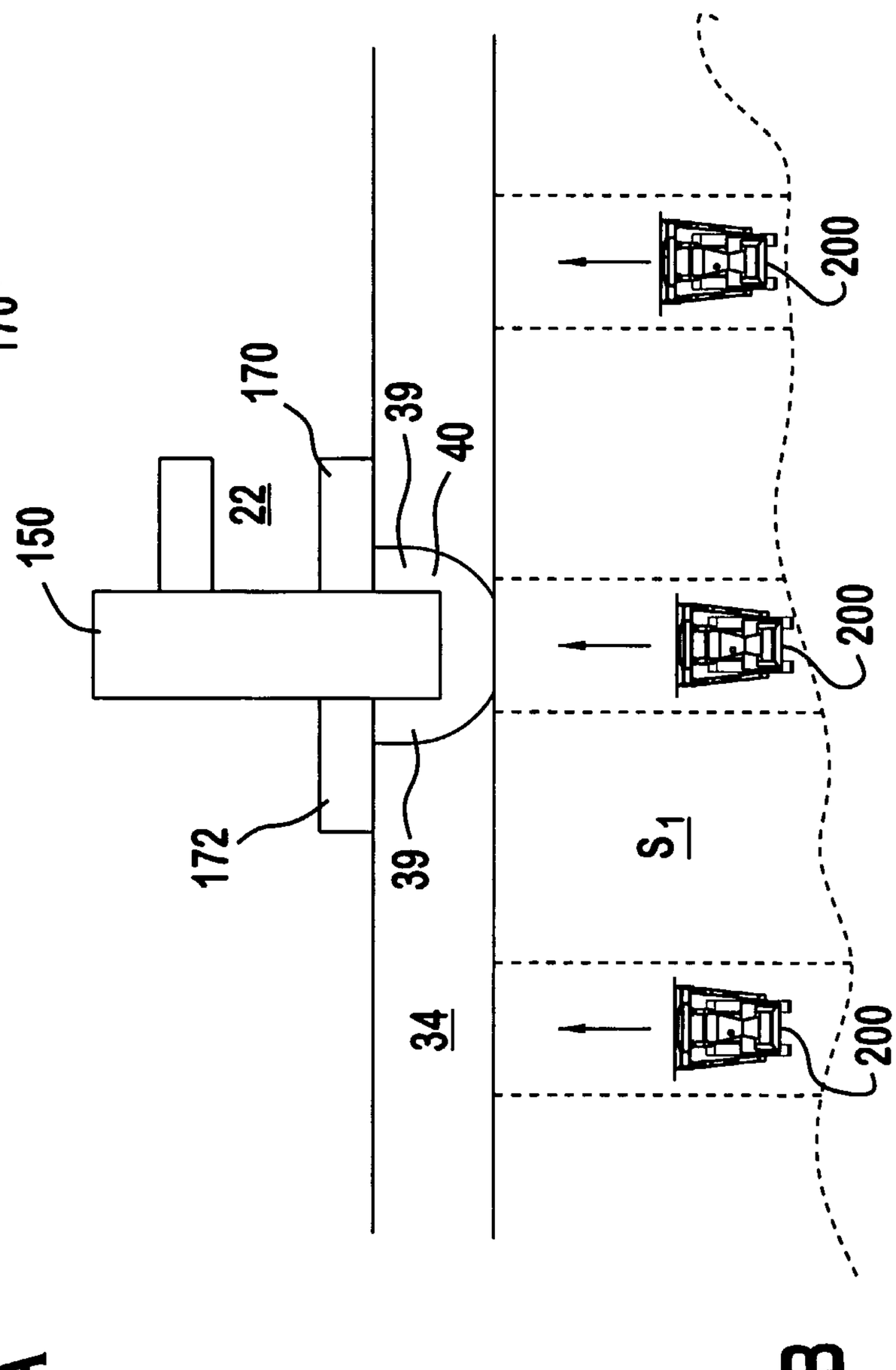
170
39
40
22
150
172
39
S1
34
200
200
200

FIG. 7B

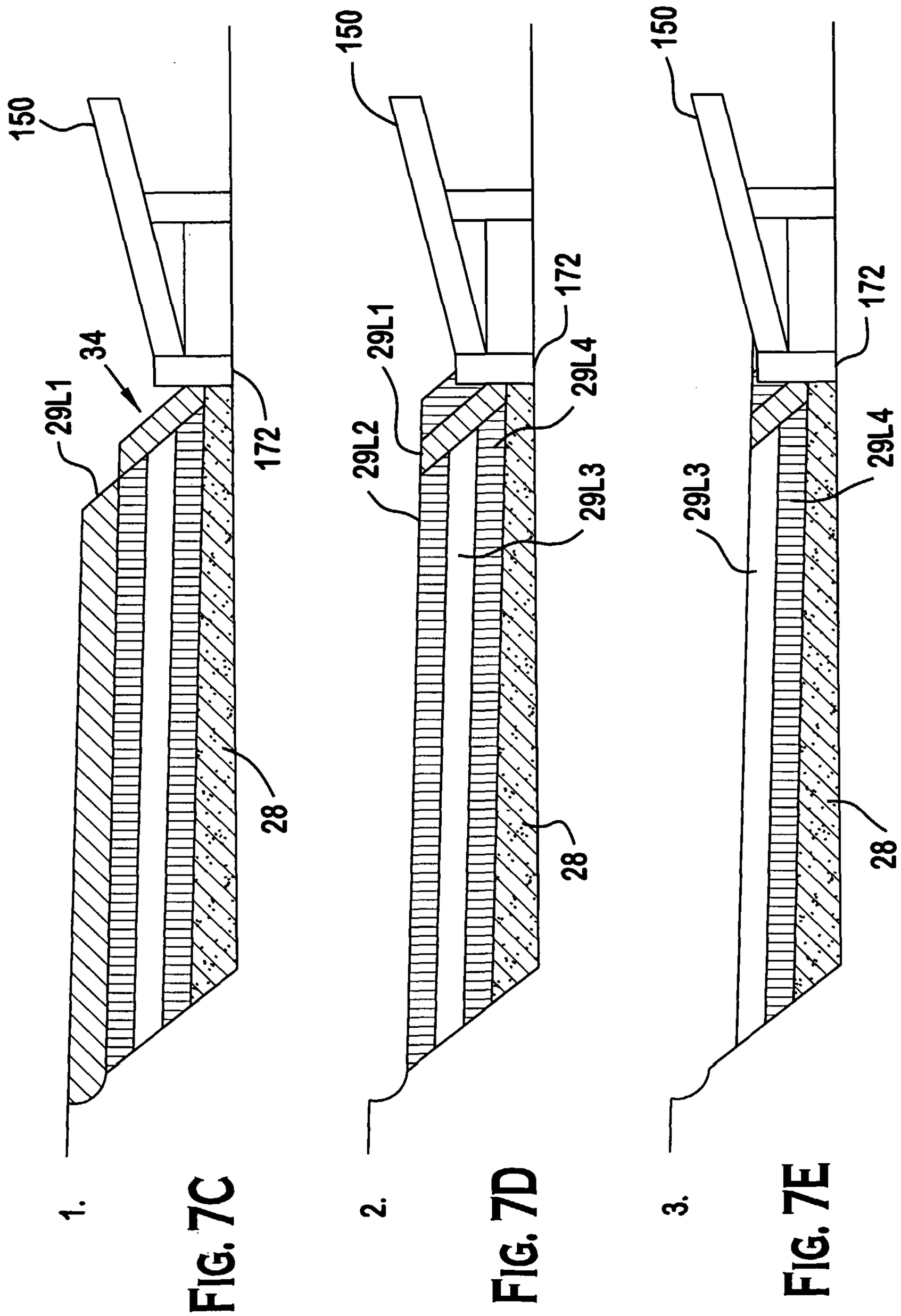

FIG. 7C

FIG. 7D

FIG. 7E

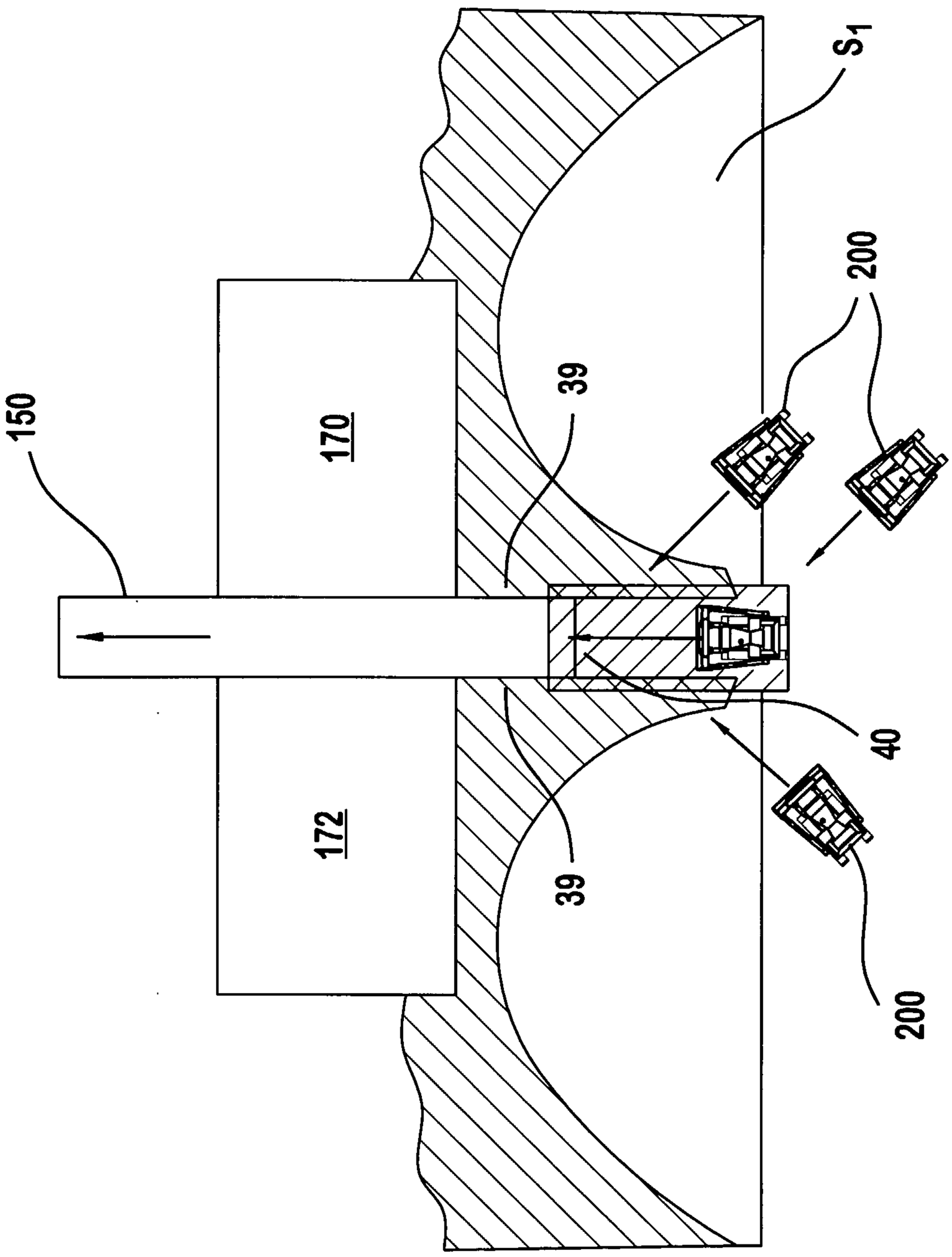

FIG. 8

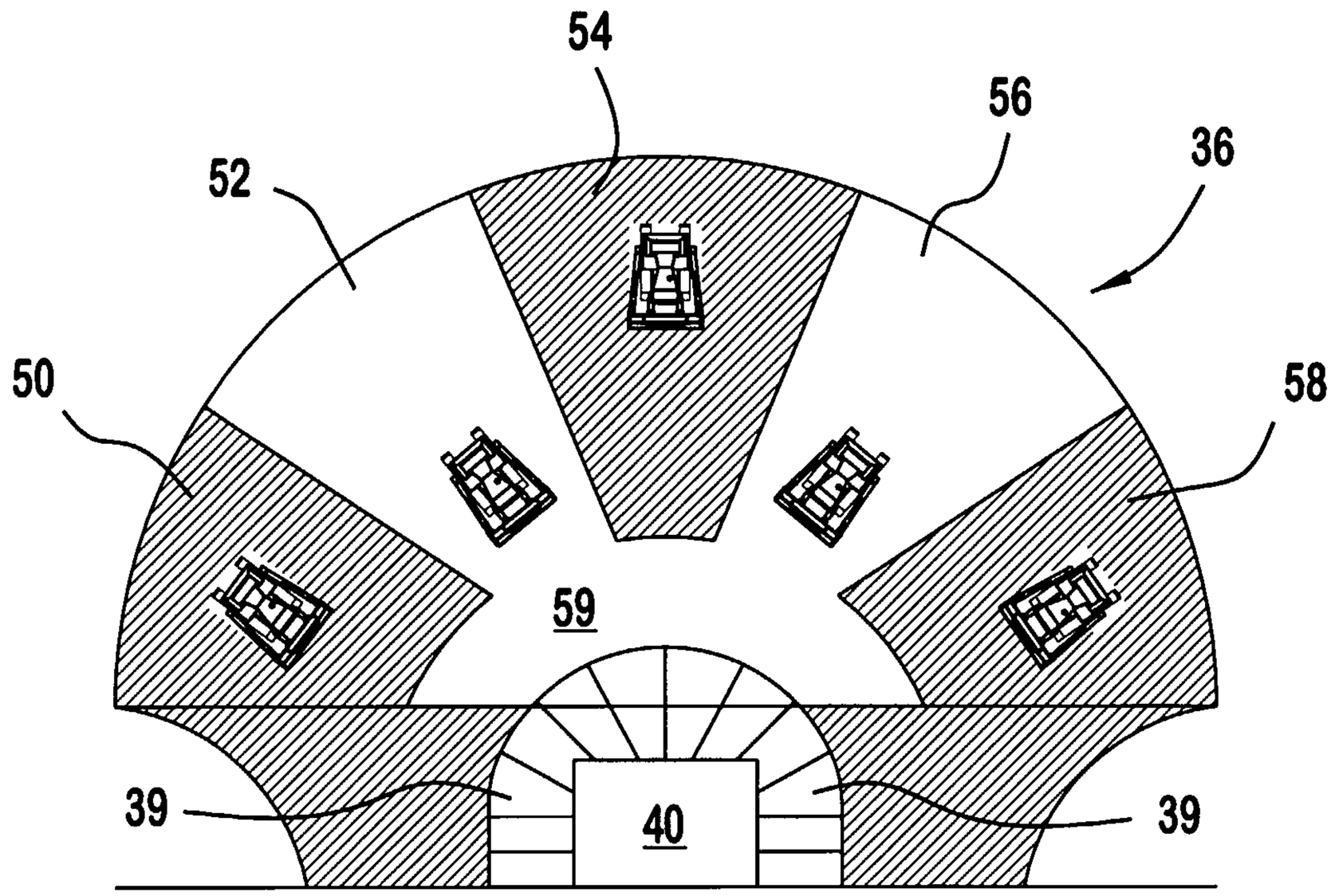

FIG. 9

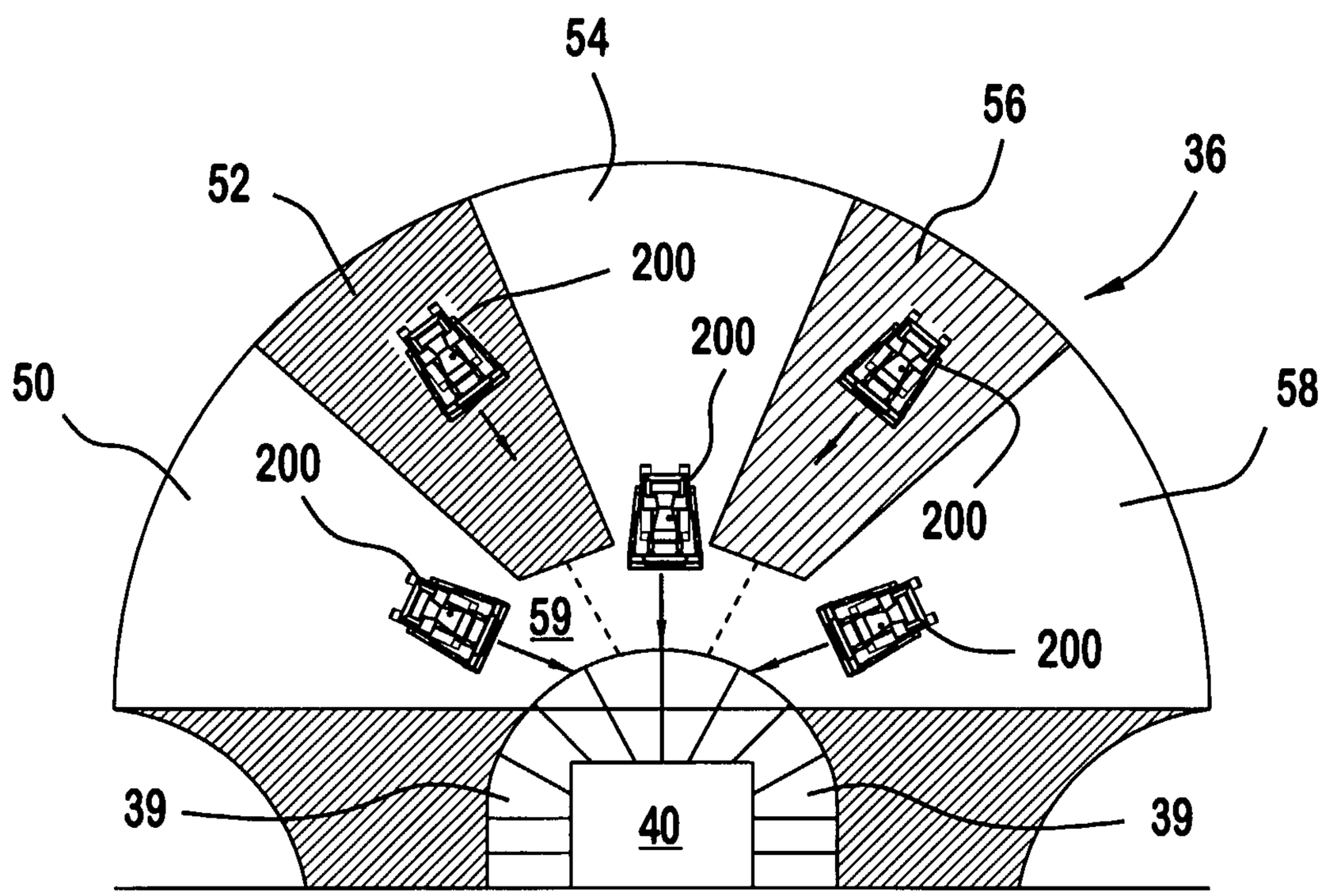

FIG. 10

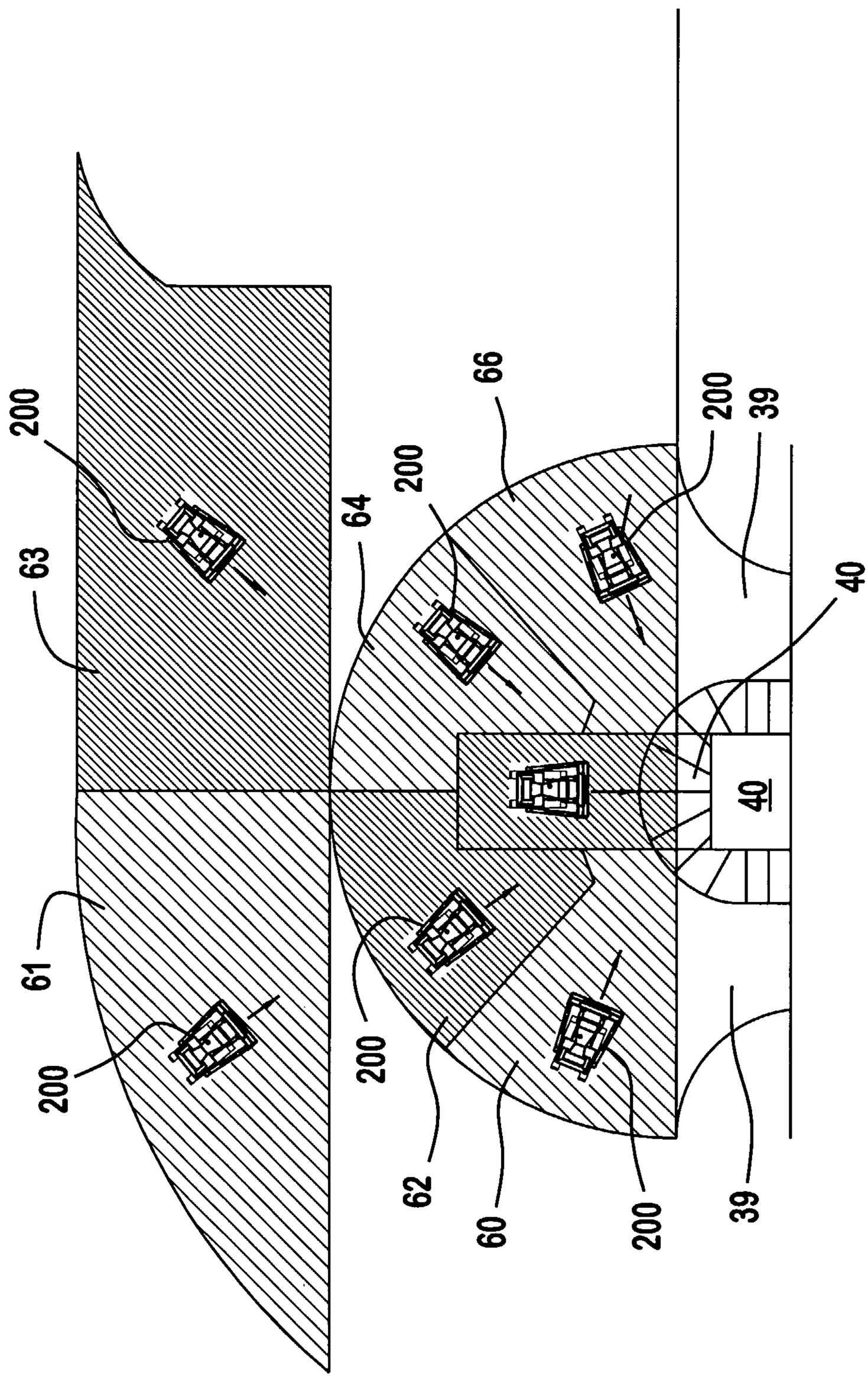

FIG. 1

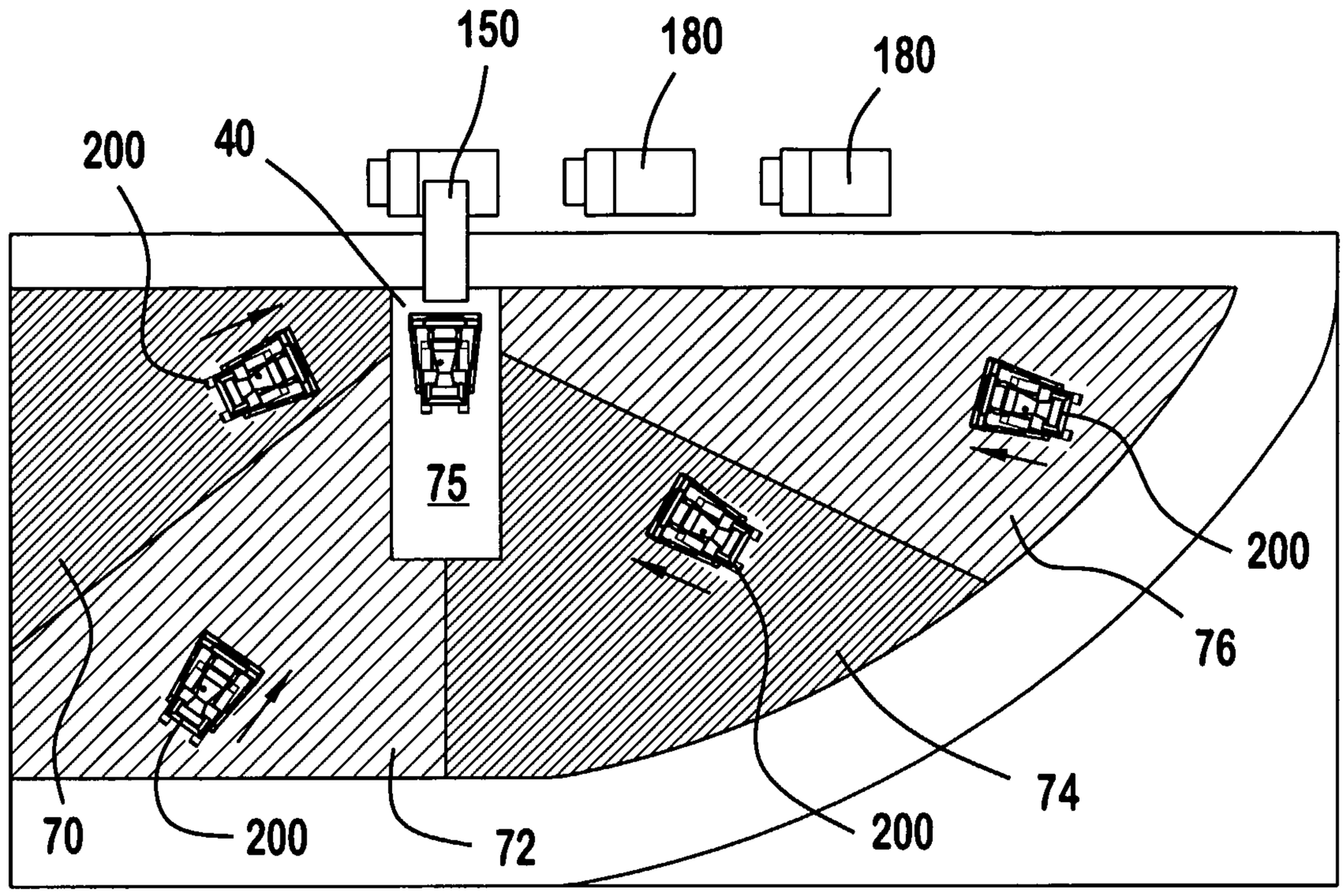

FIG. 12A

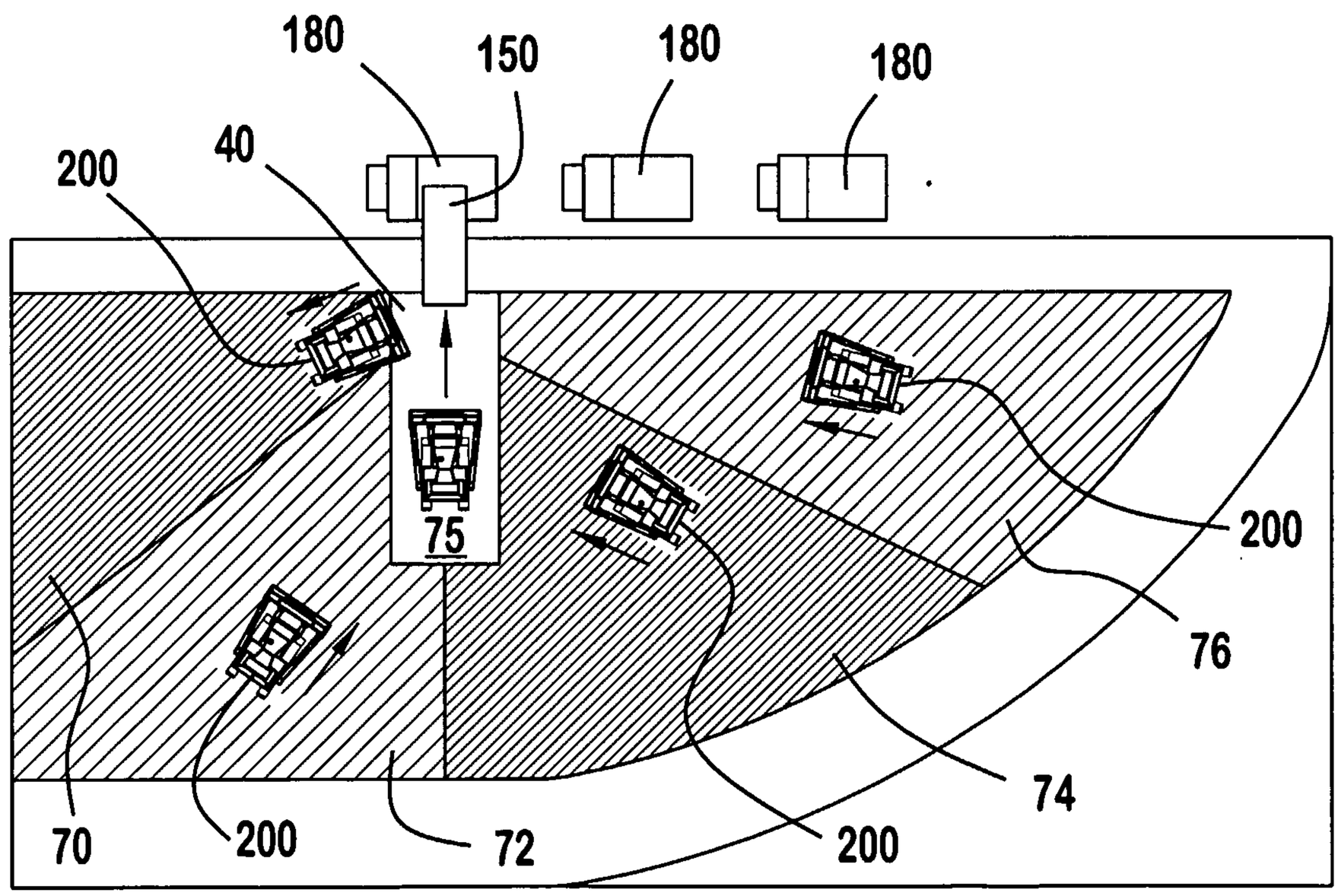

FIG. 12B

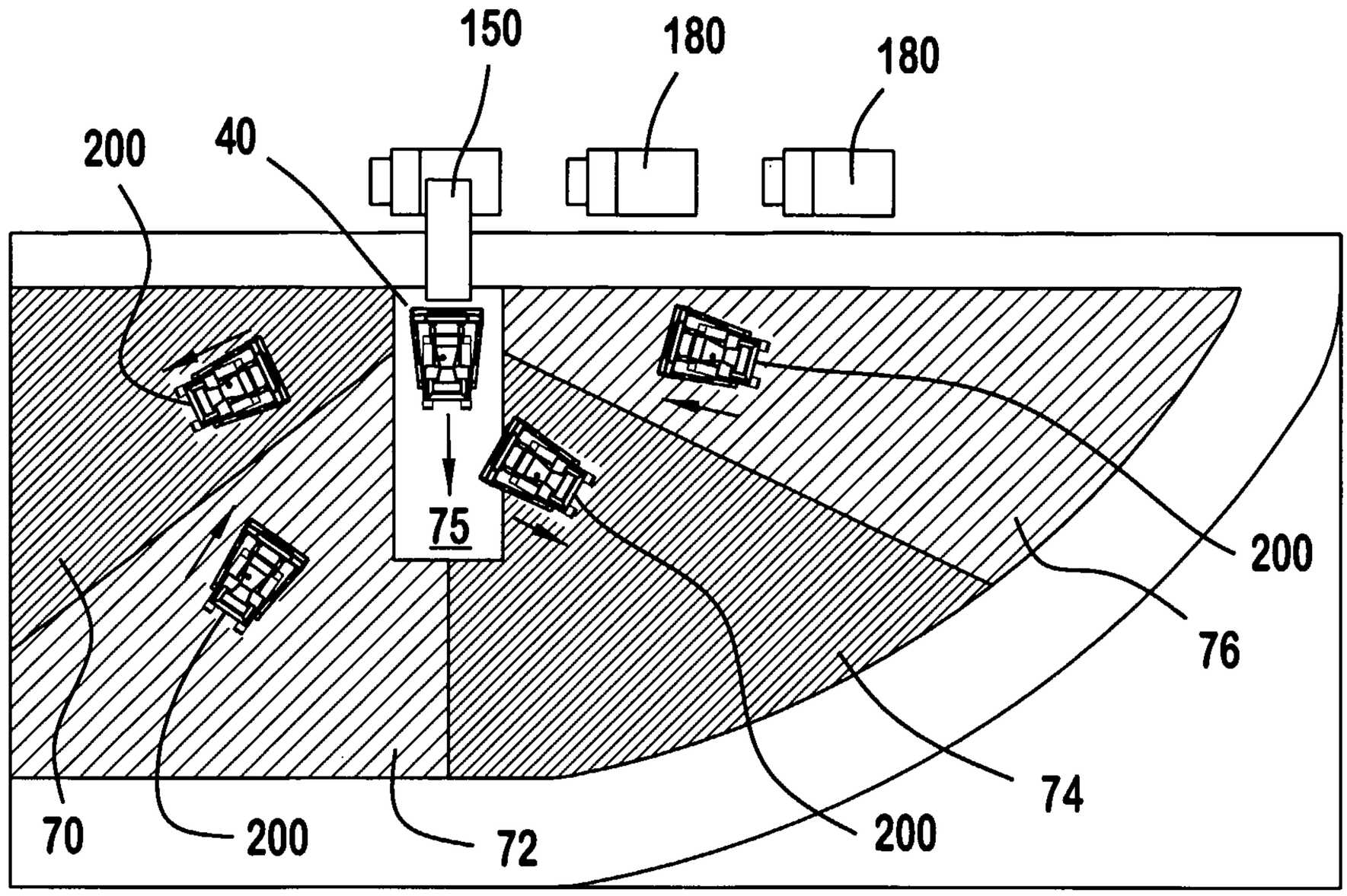

FIG. 12C

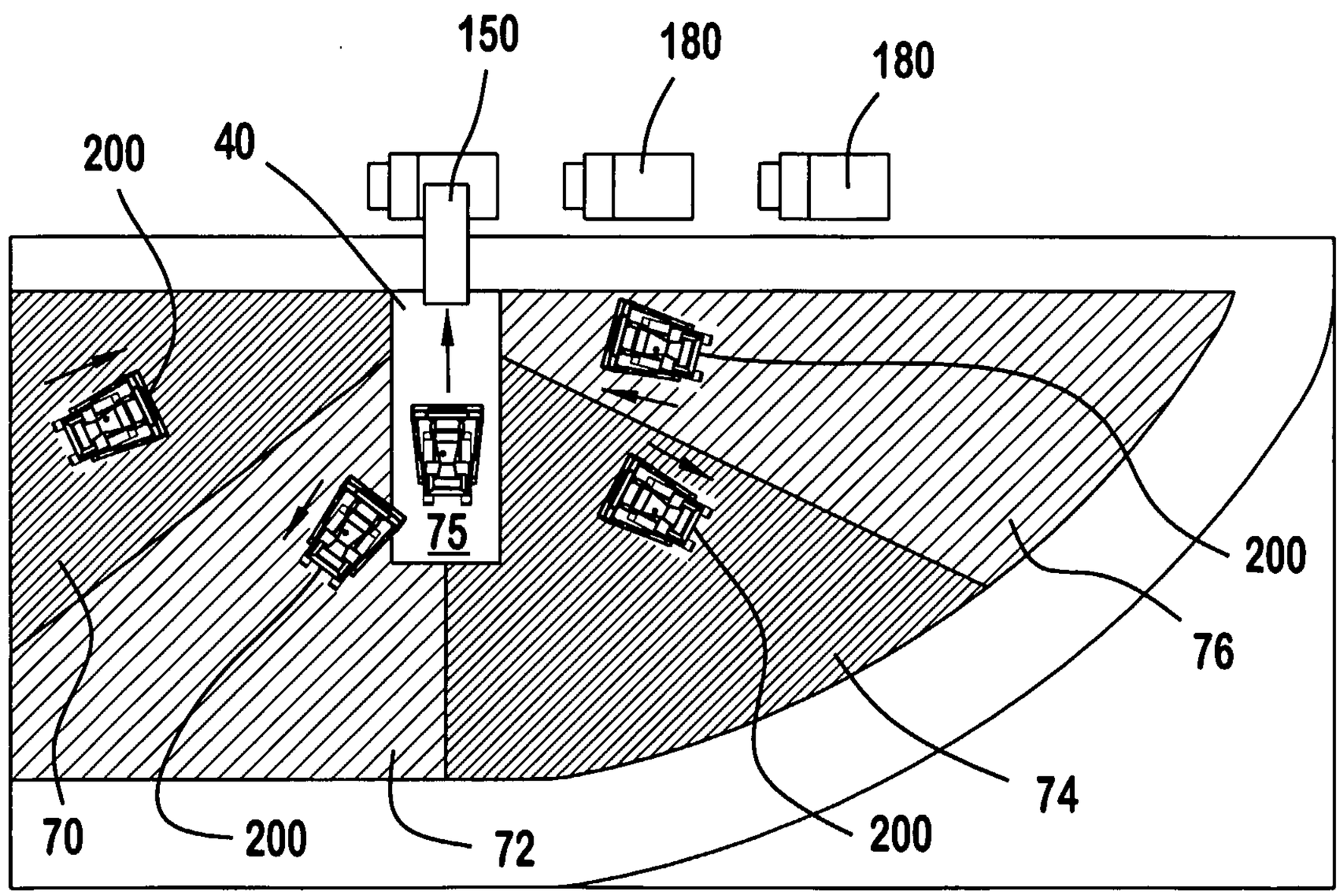

FIG. 12D

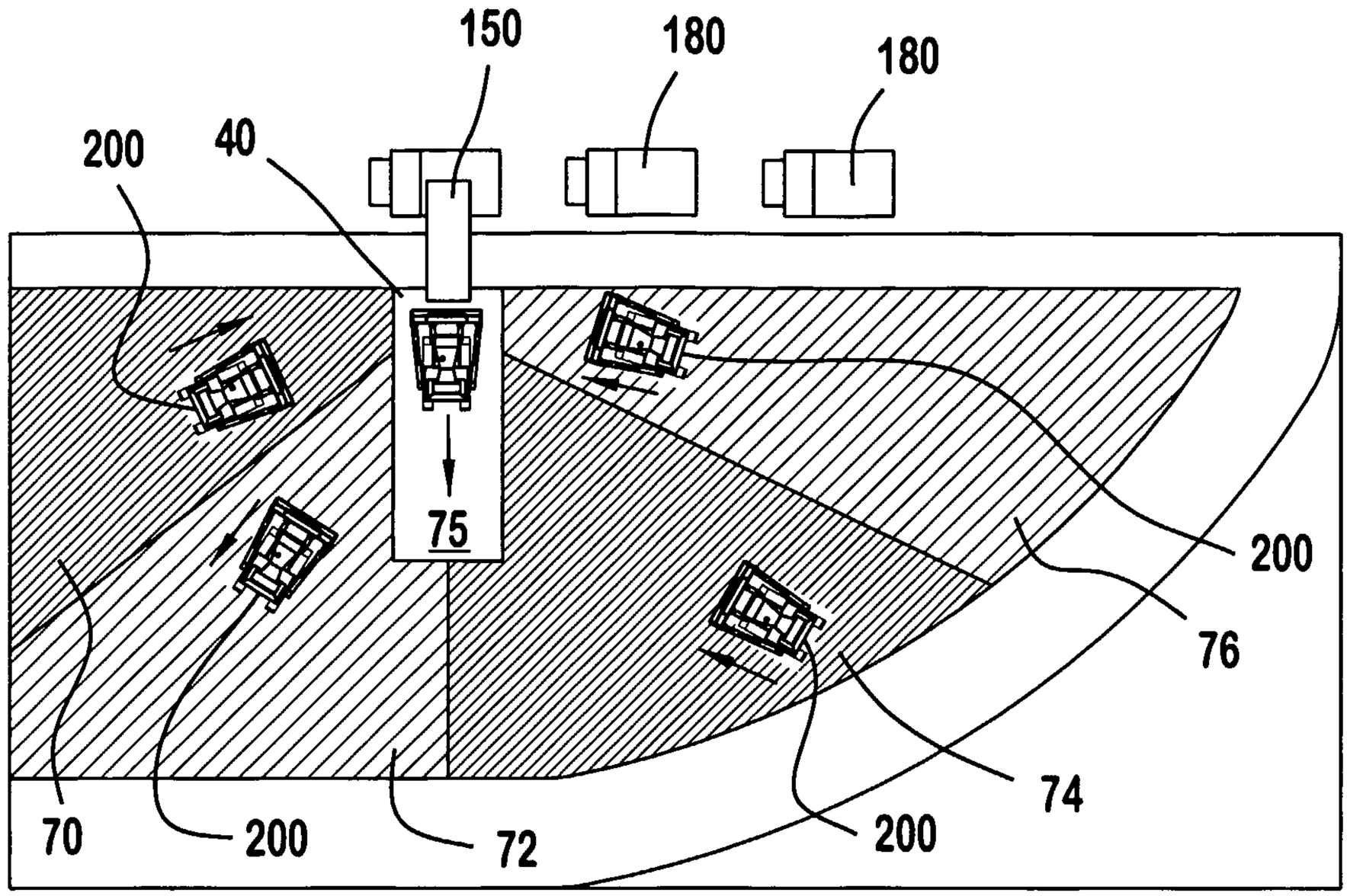

FIG. 12E

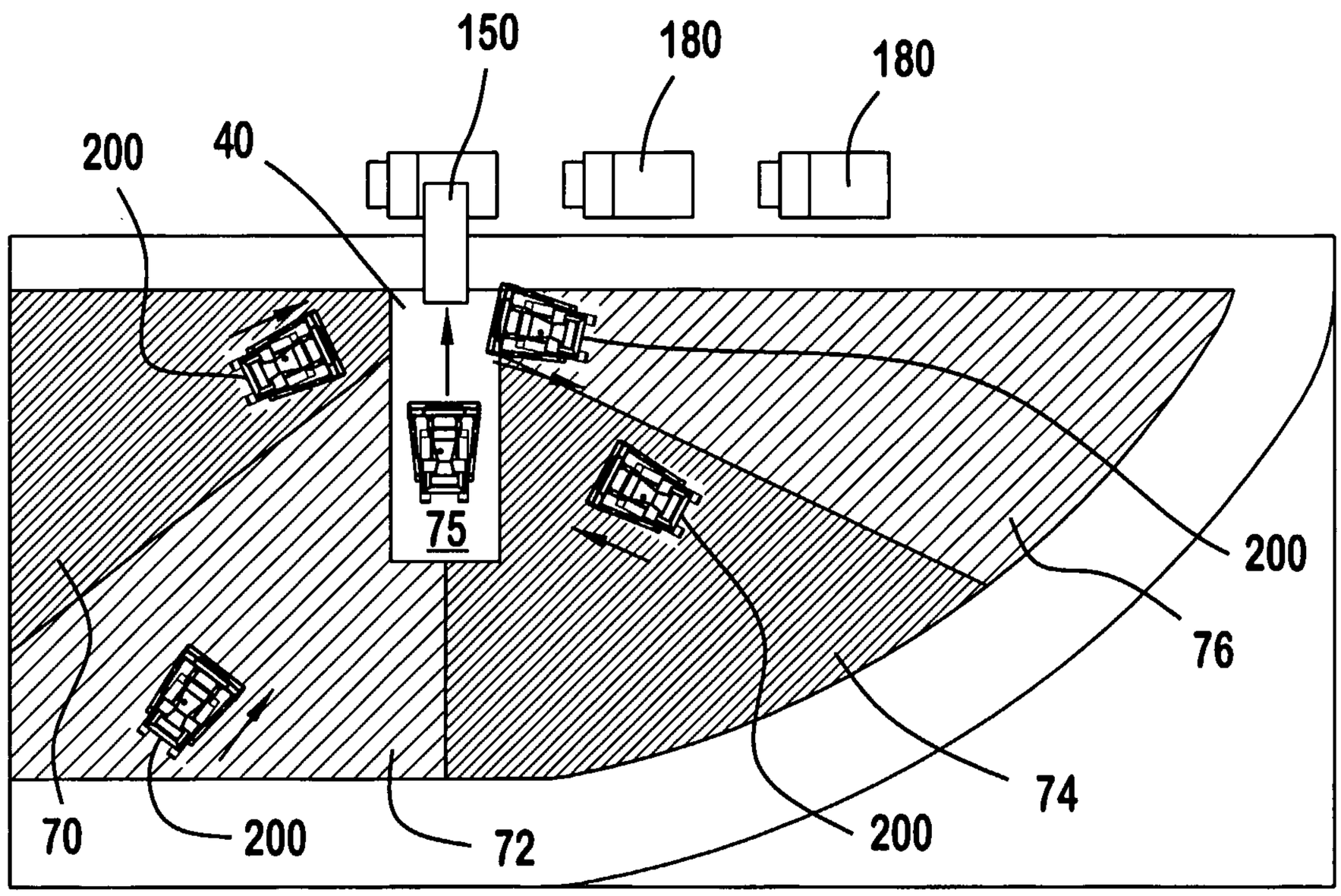

FIG. 12F

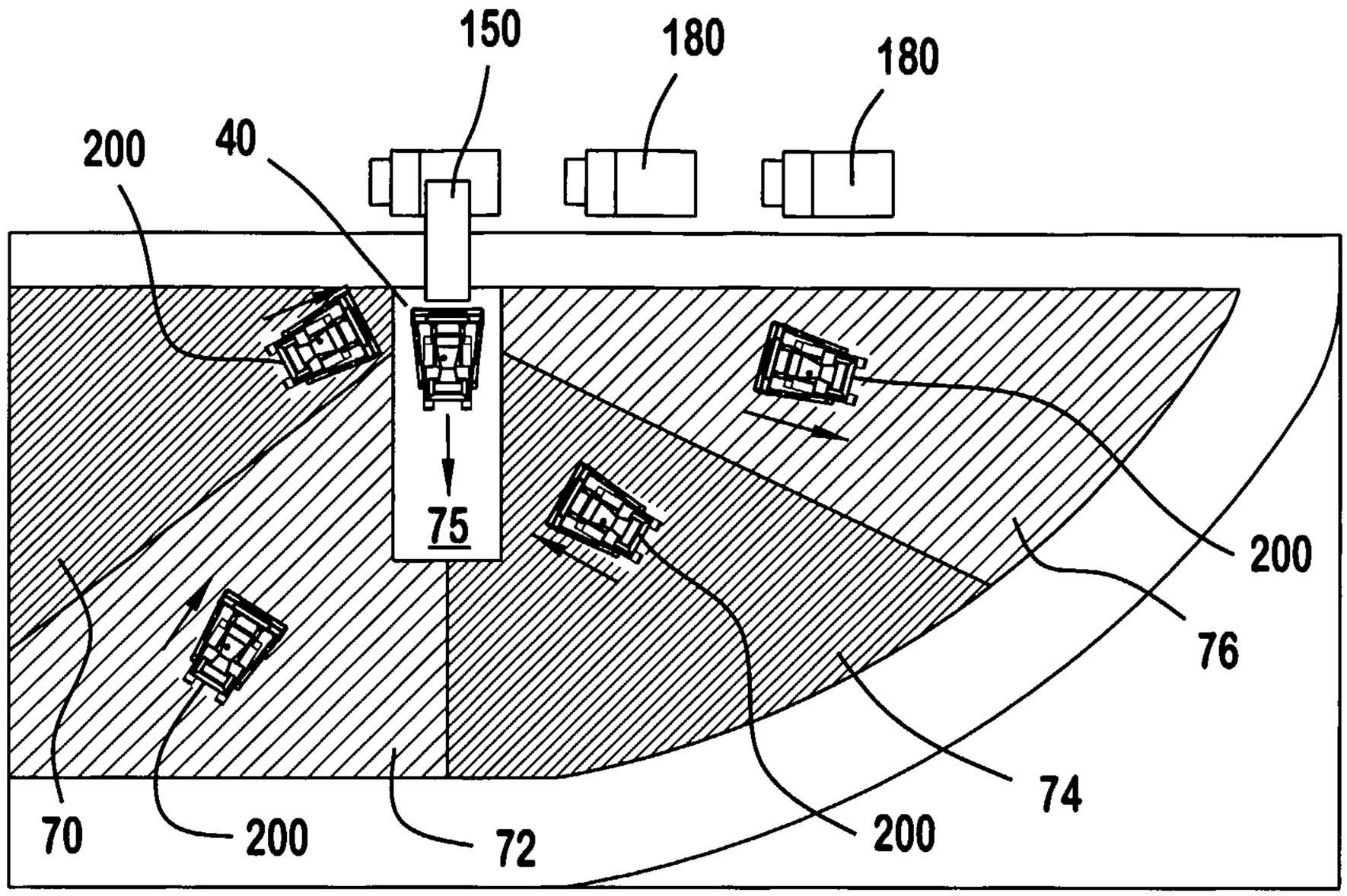

FIG. 12G

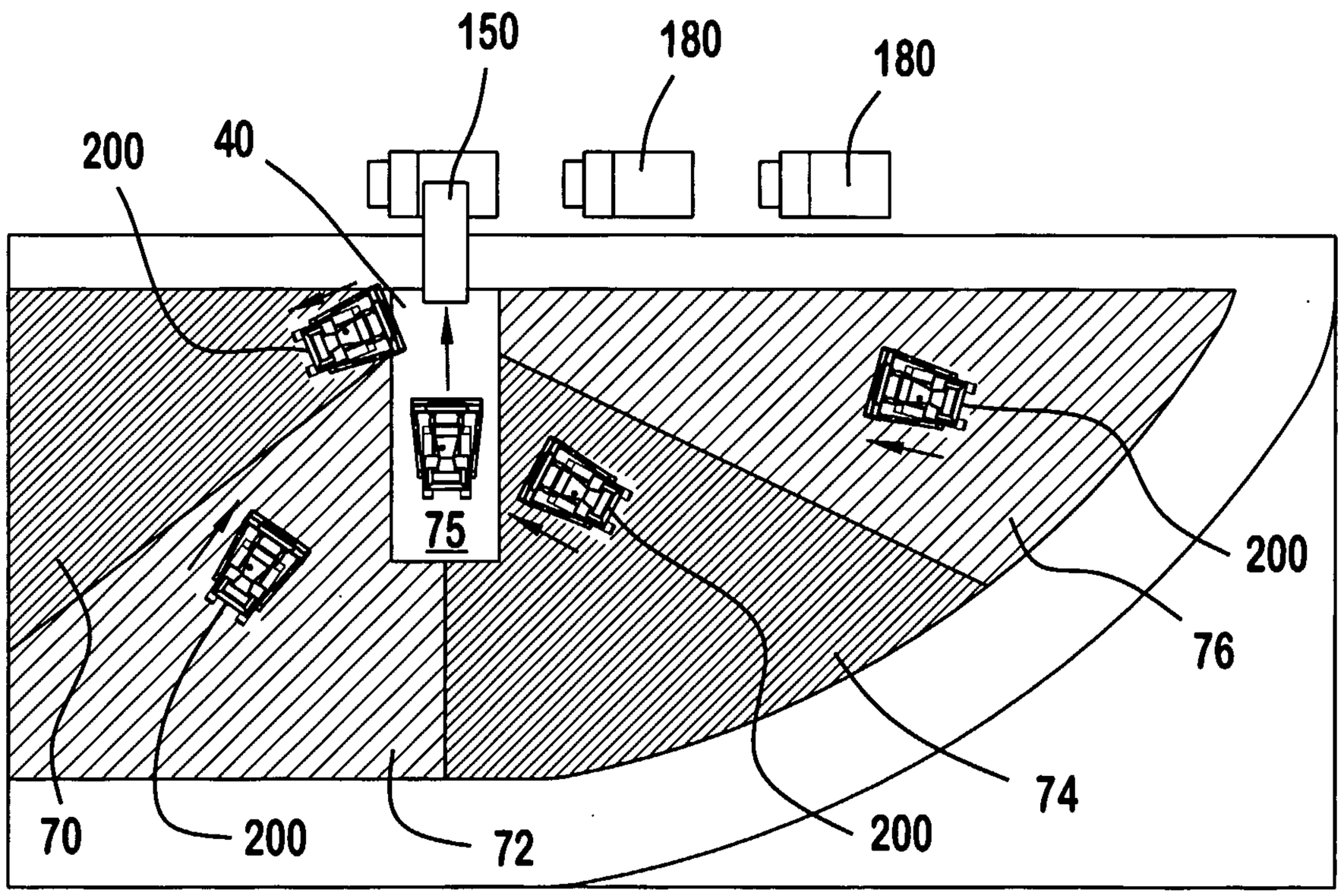

FIG. 12H

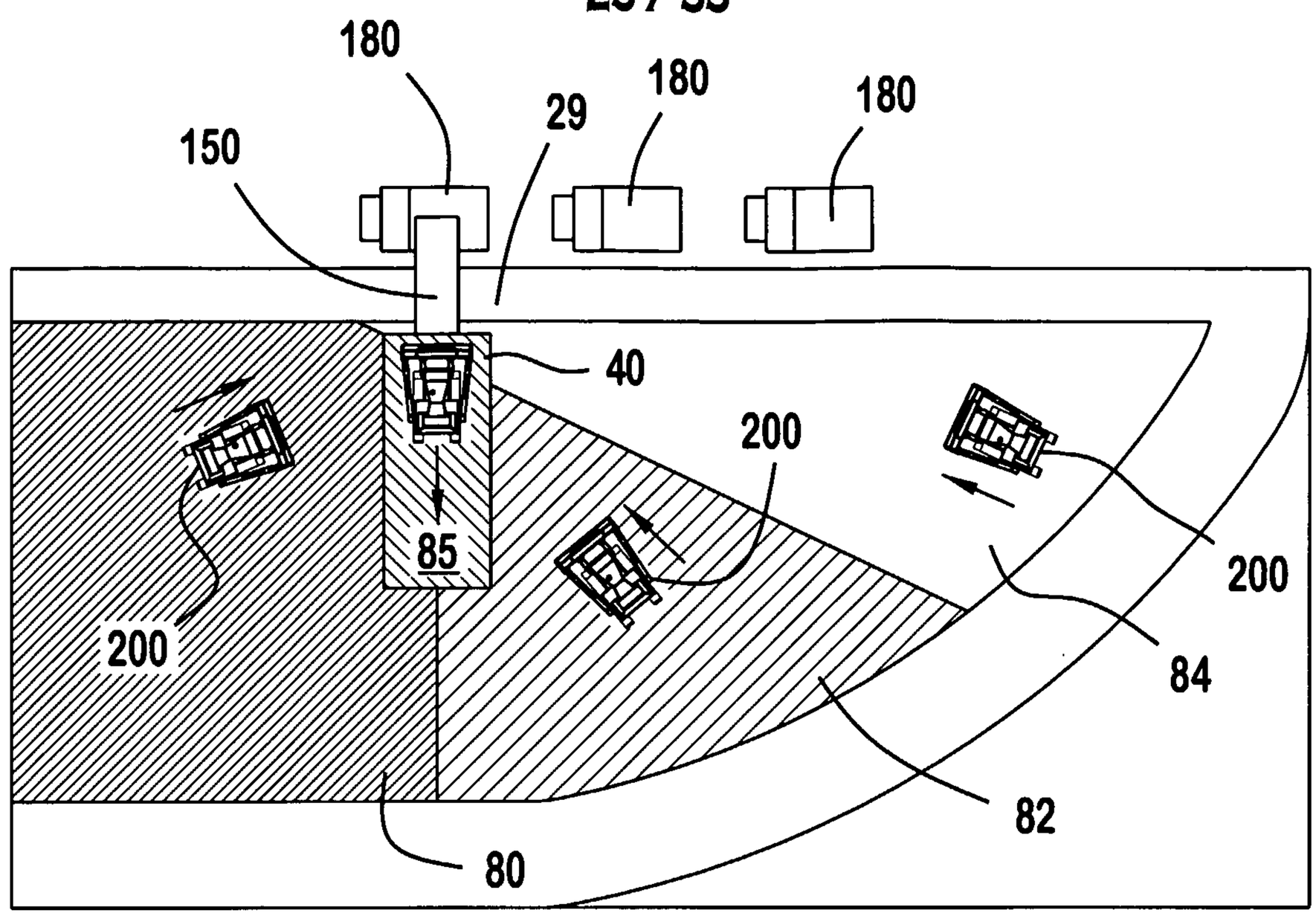

FIG. 13A

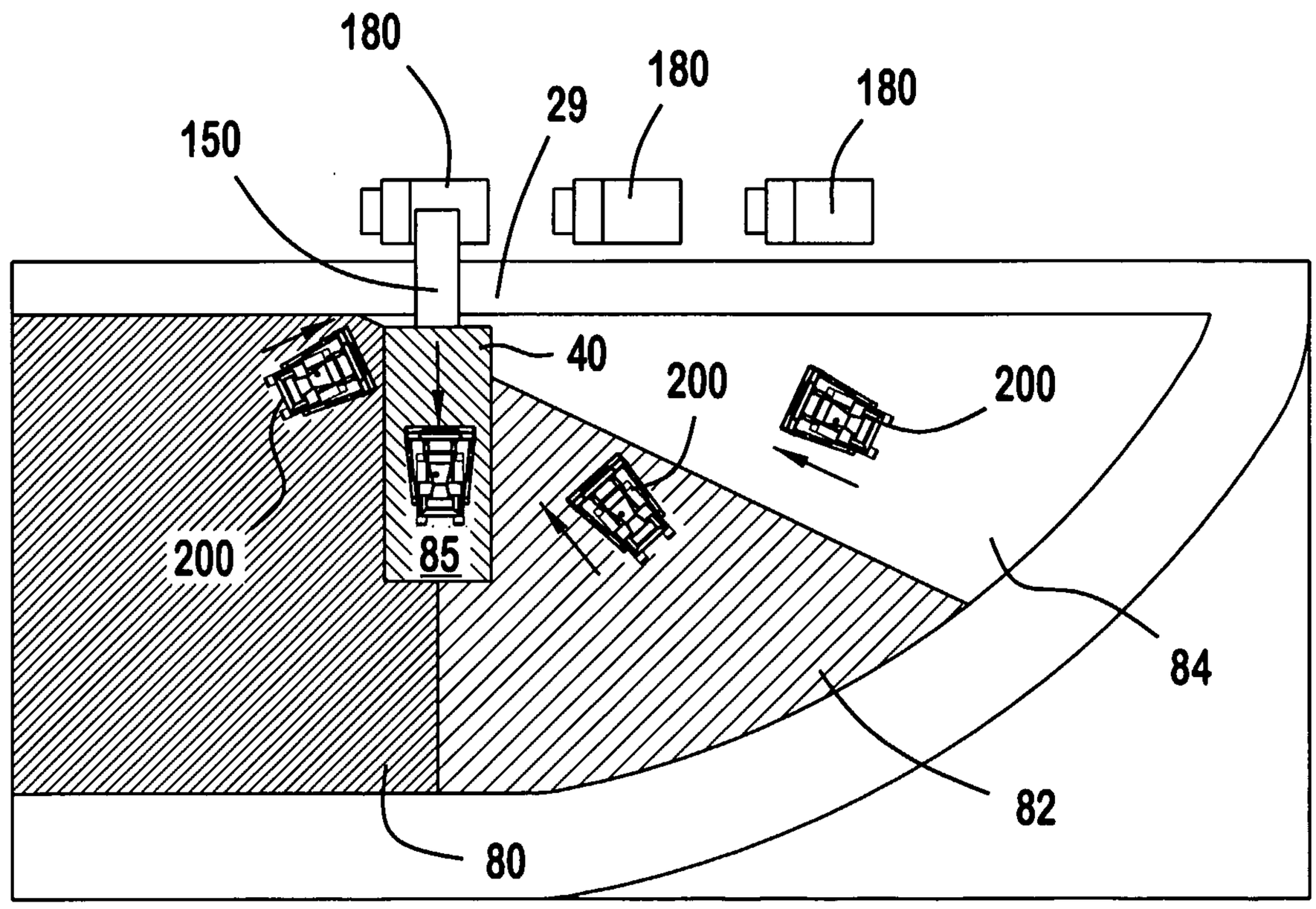

FIG. 13B

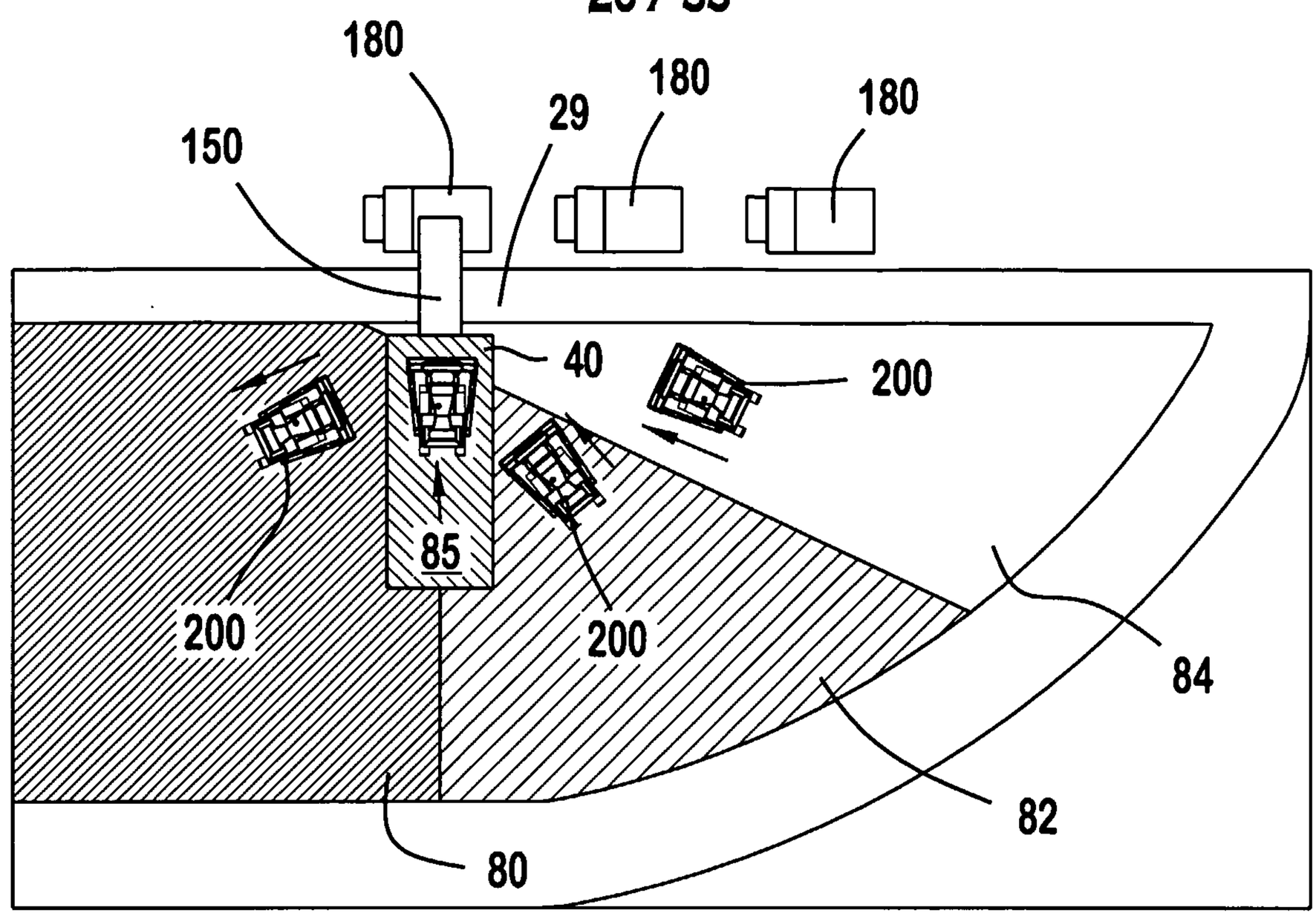

FIG. 13C

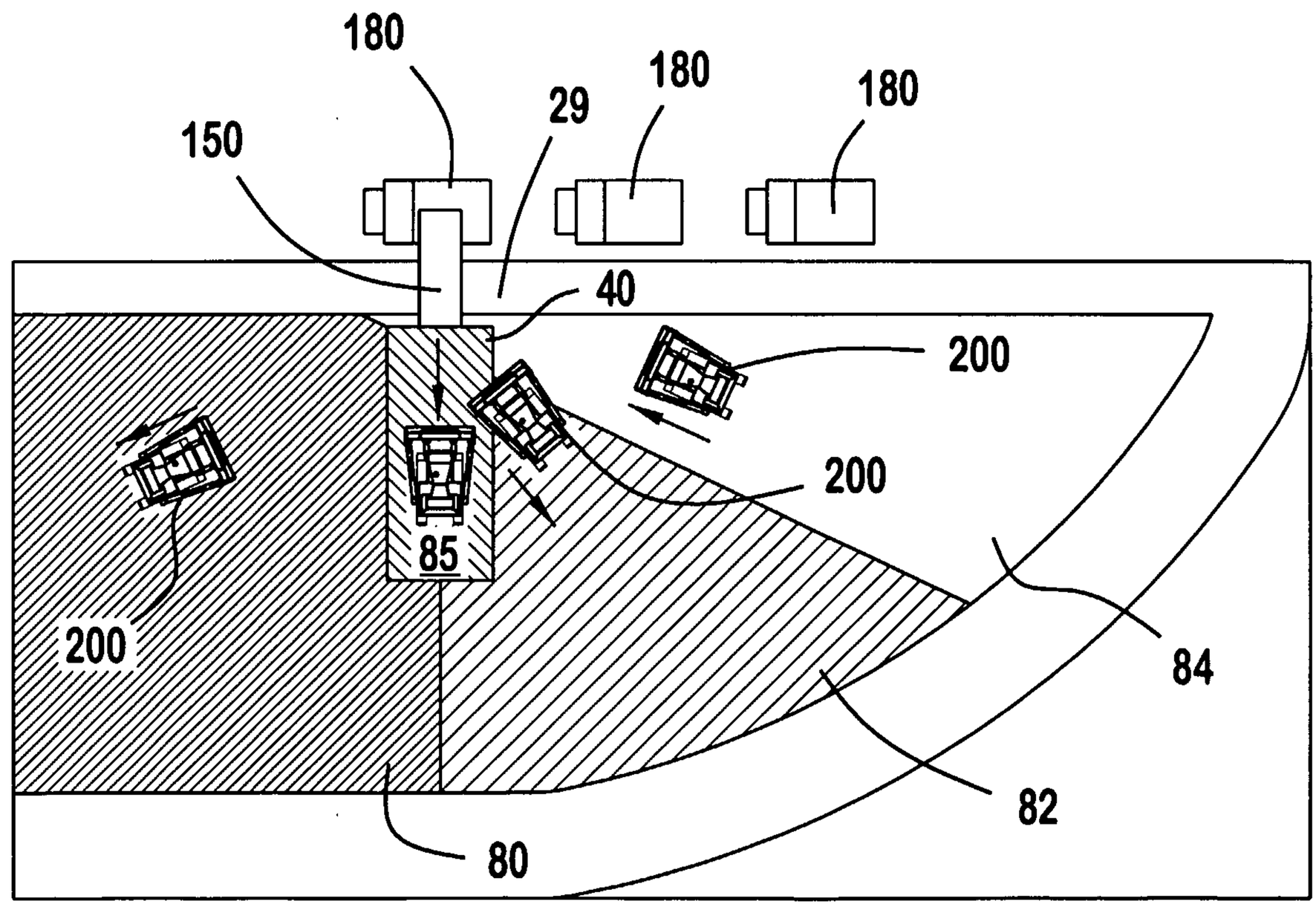

FIG. 13D

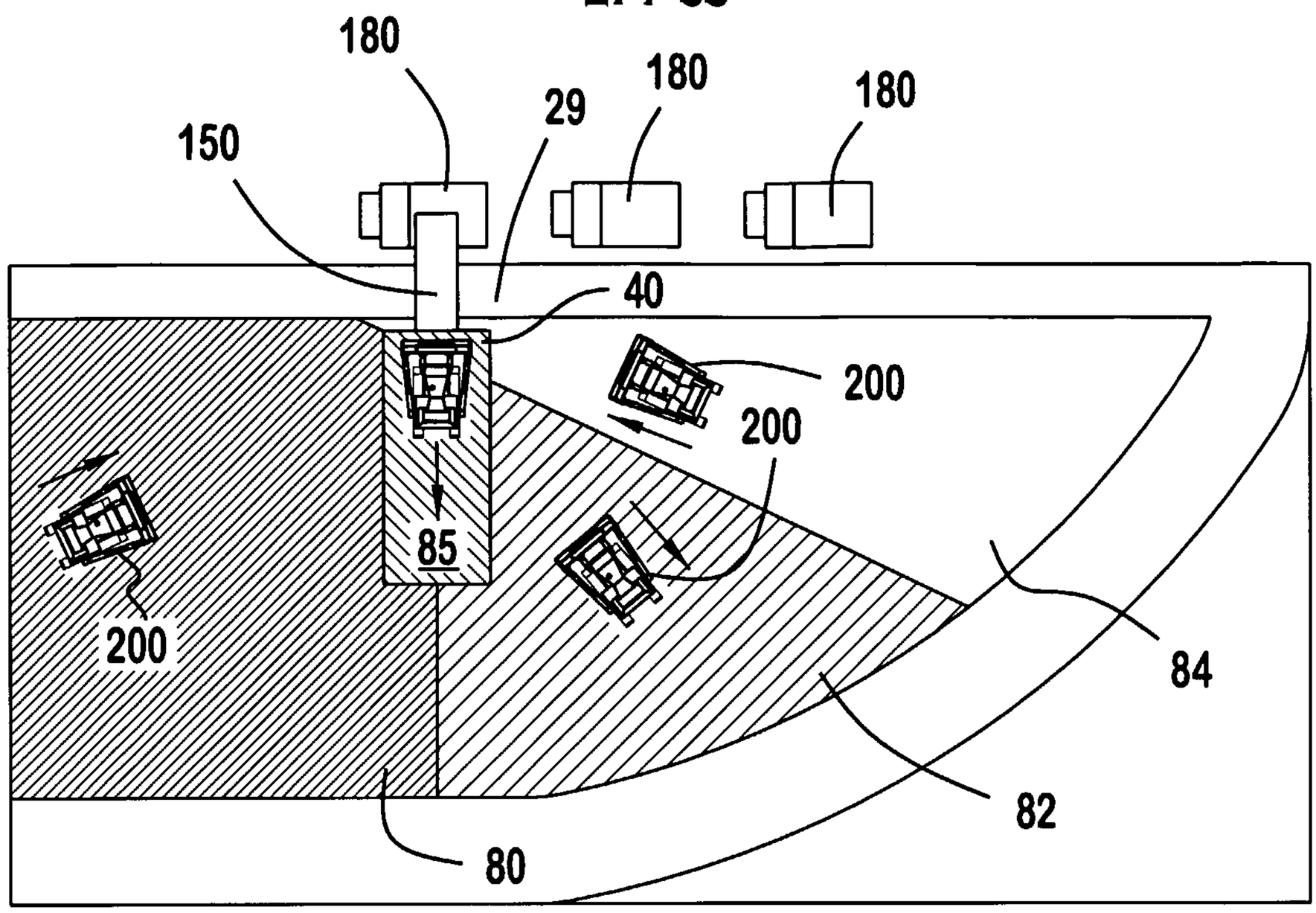

FIG. 13E

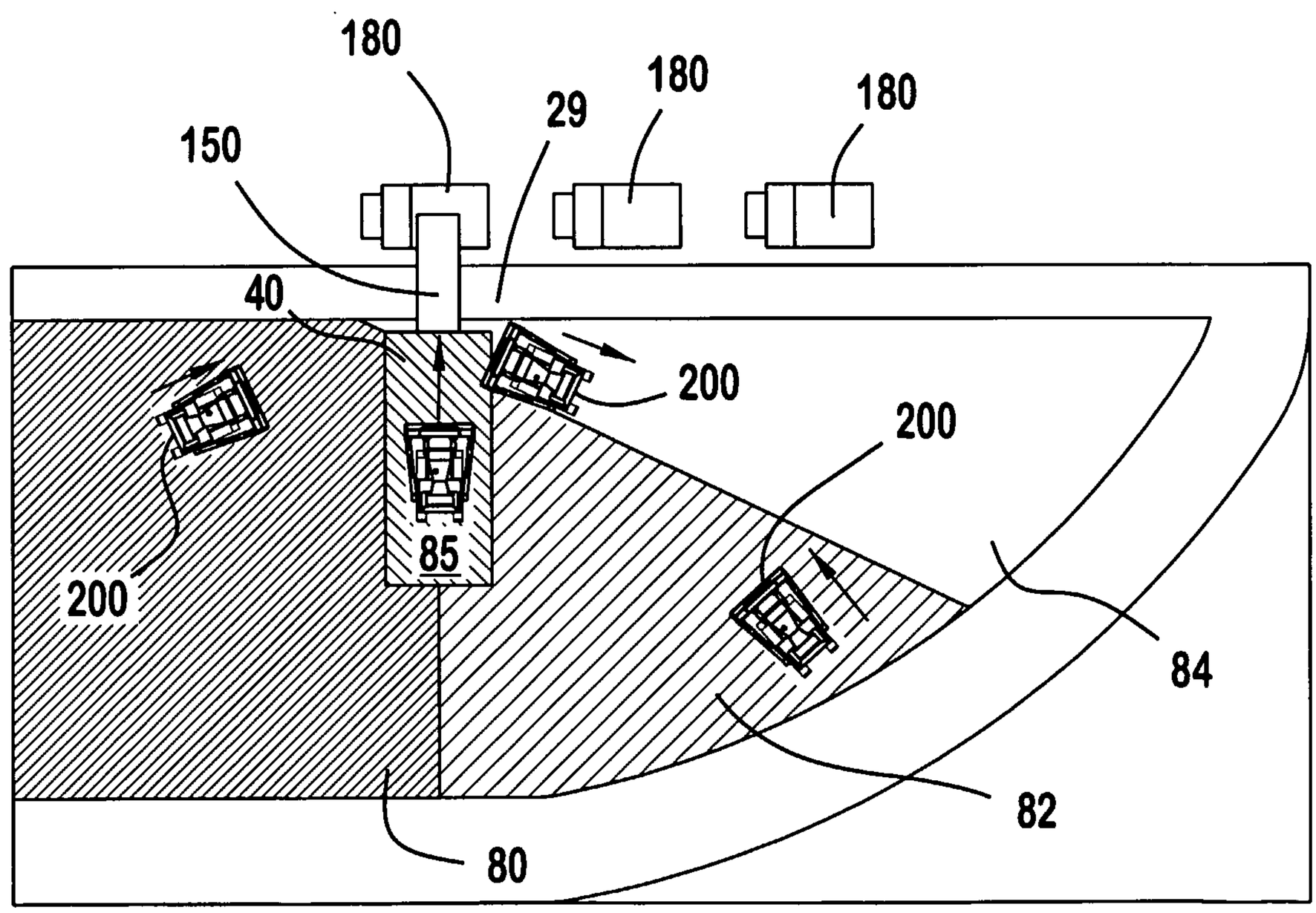

FIG. 13F

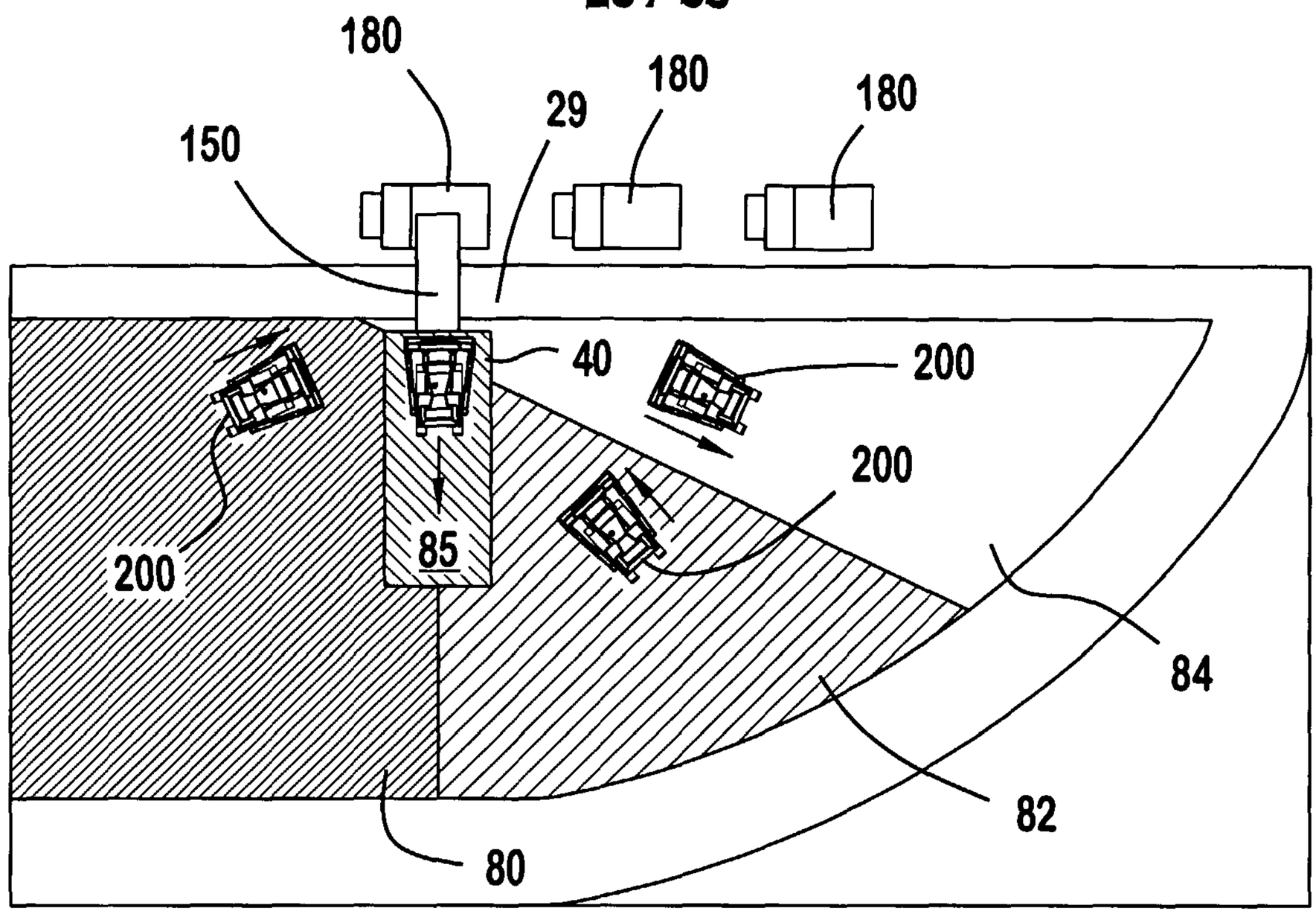

FIG. 13G

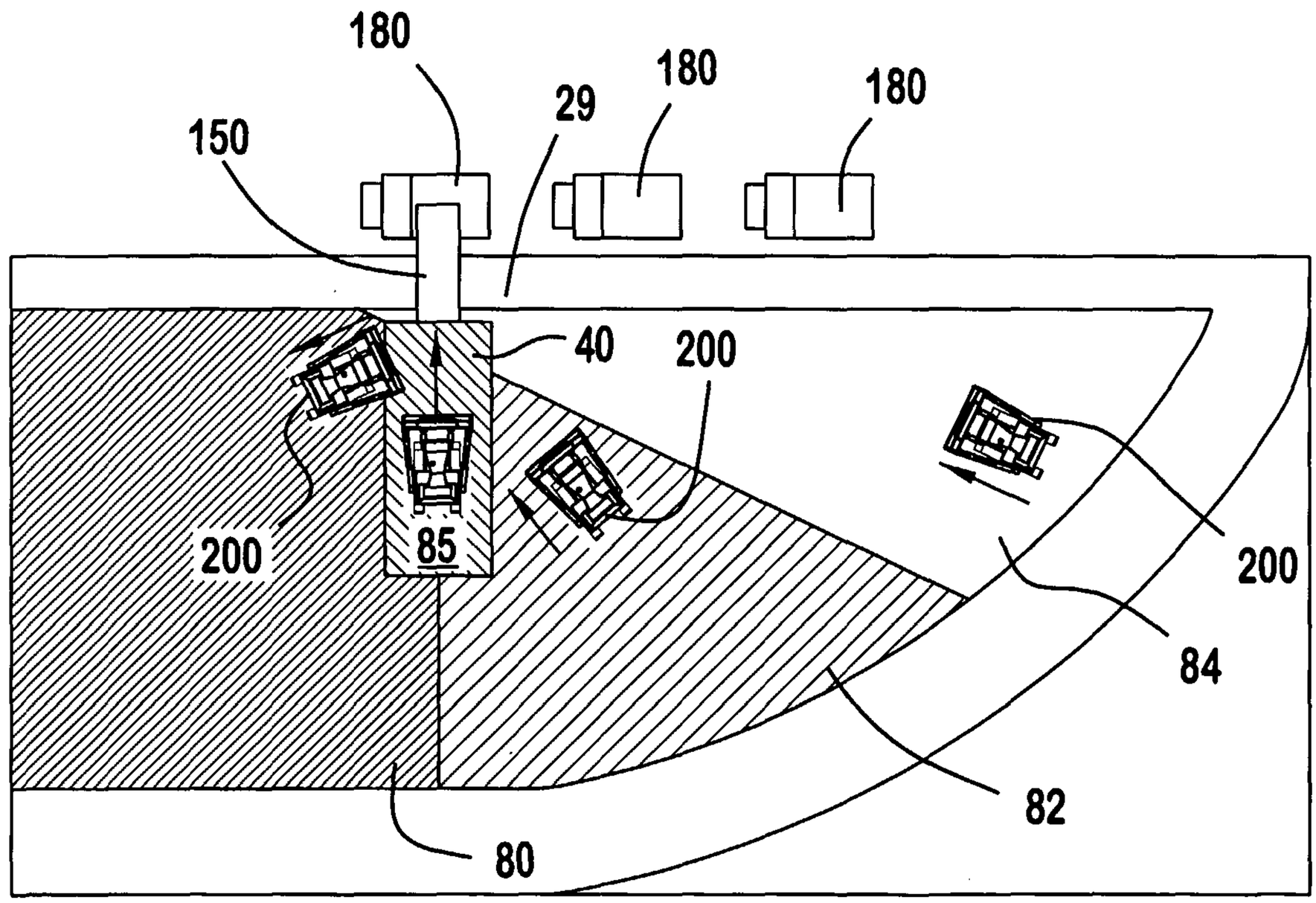

FIG. 13H

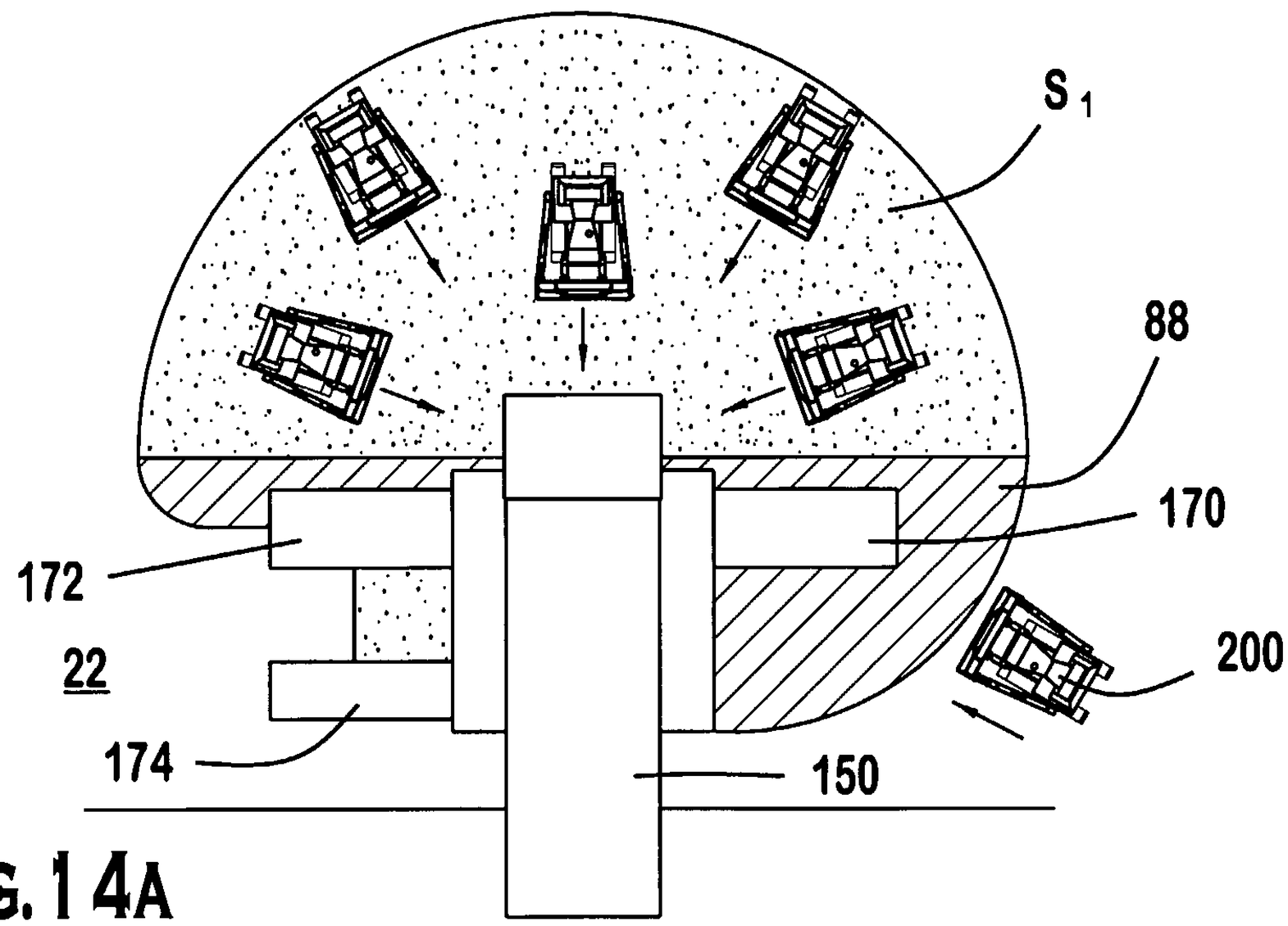

FIG. 14A

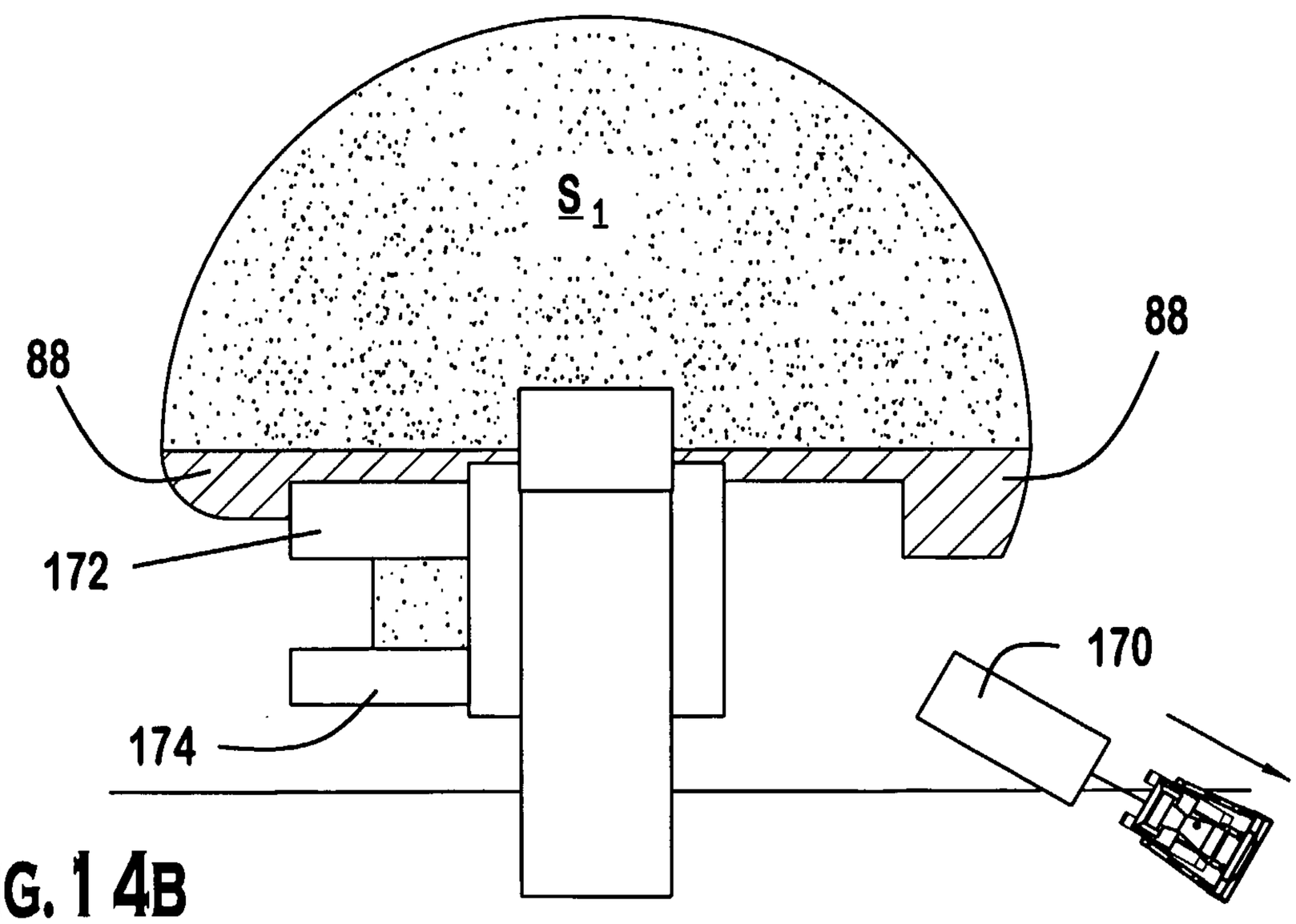

FIG. 14B

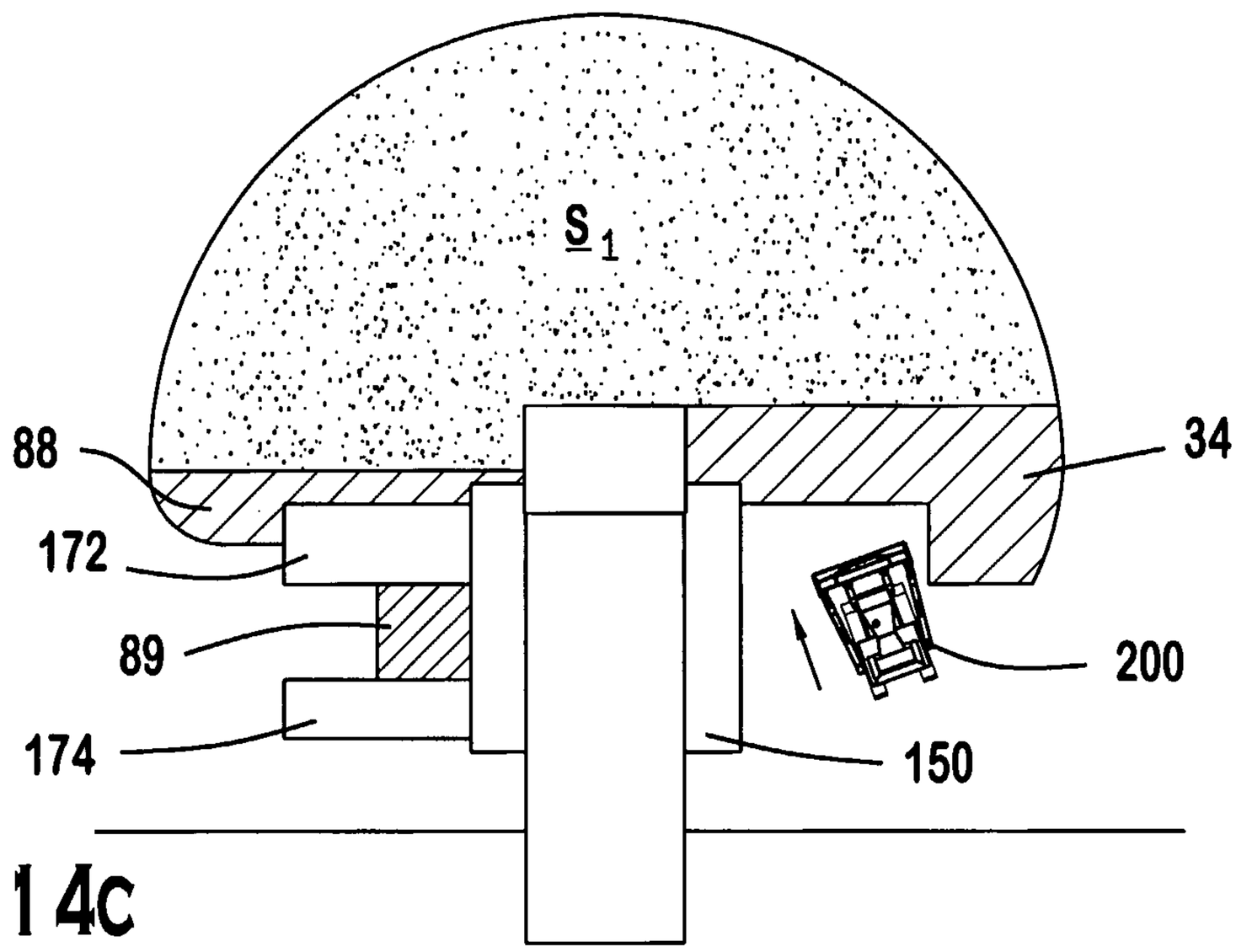

FIG. 14C

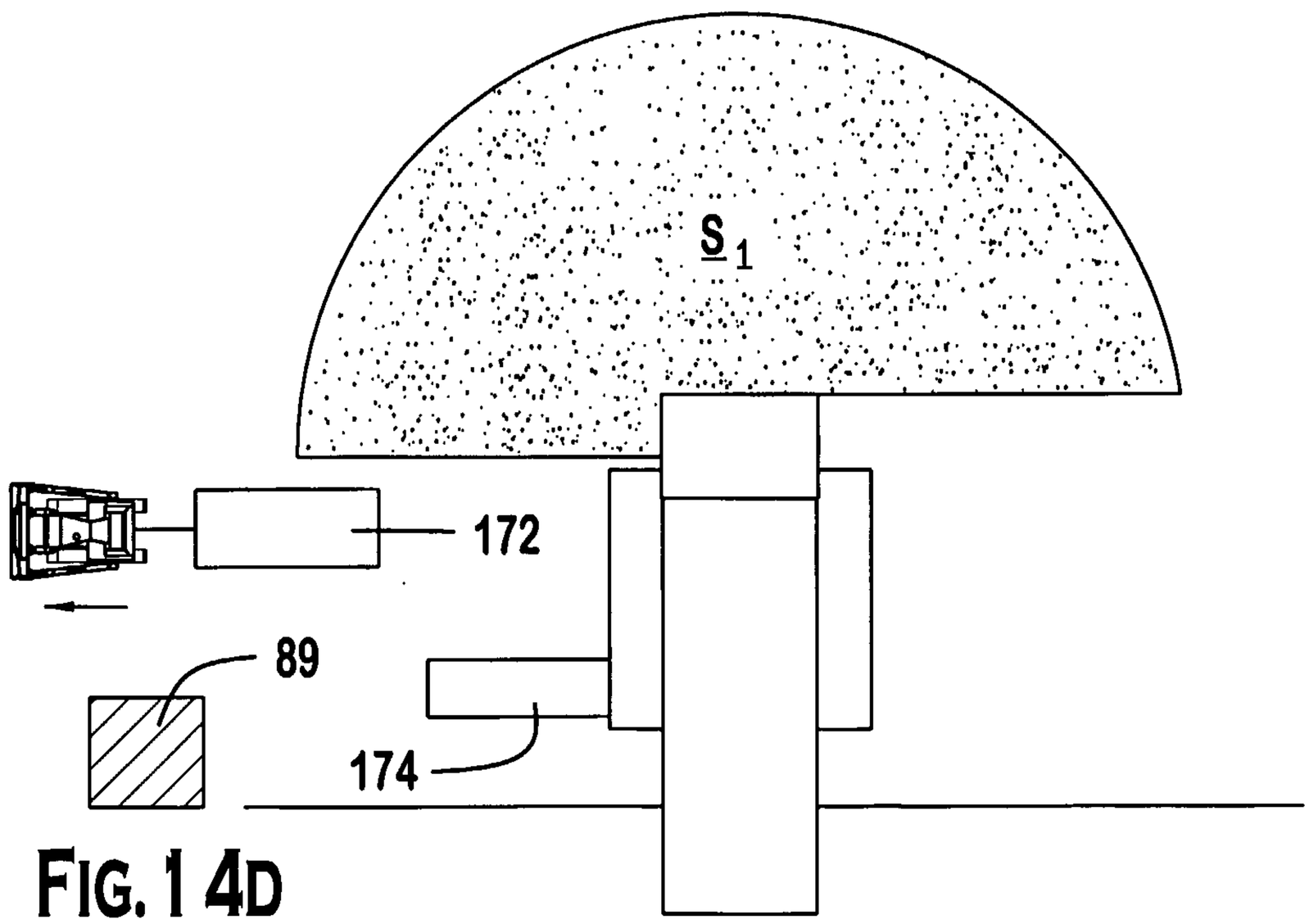

FIG. 14D

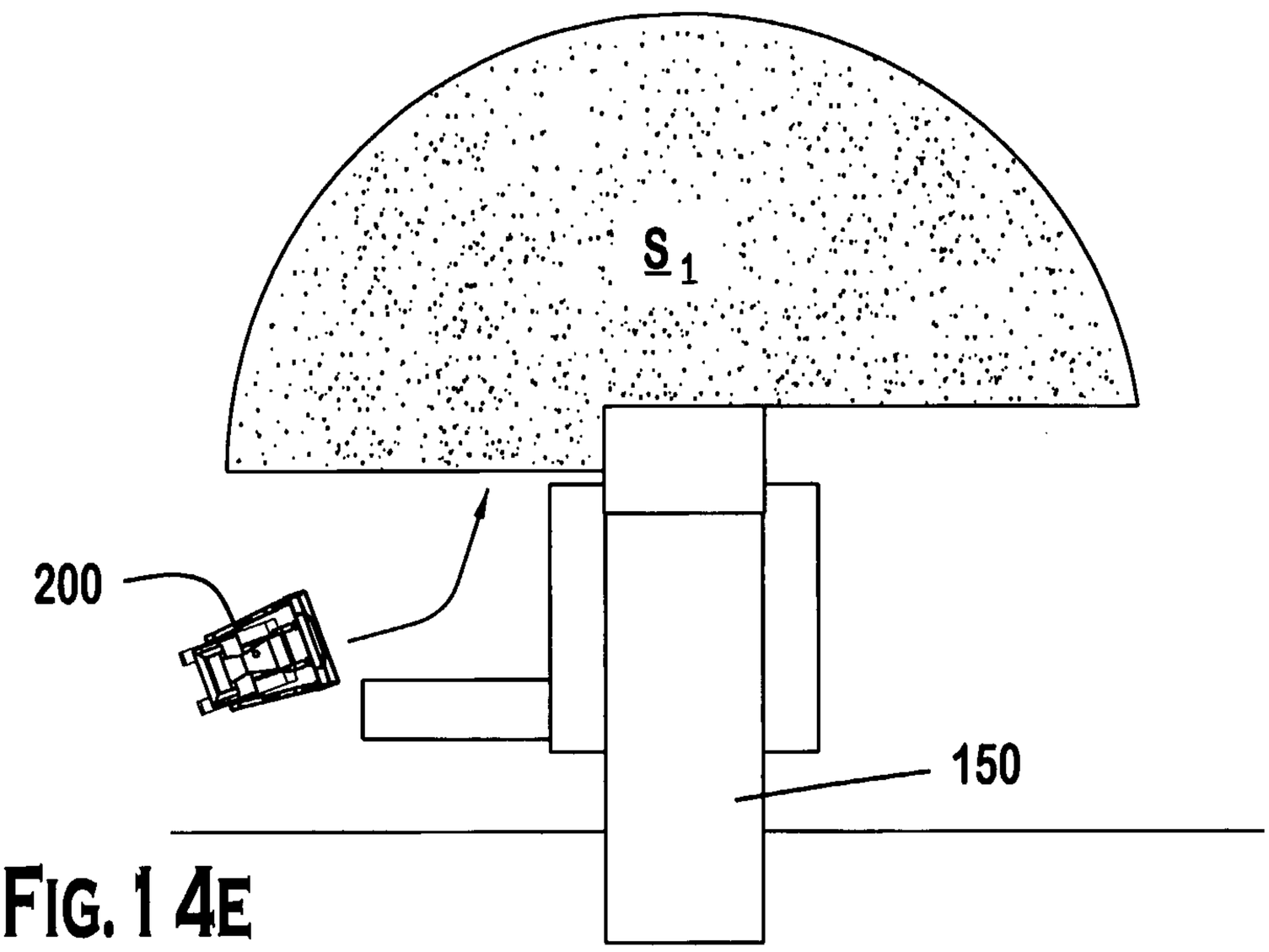

FIG. 14E

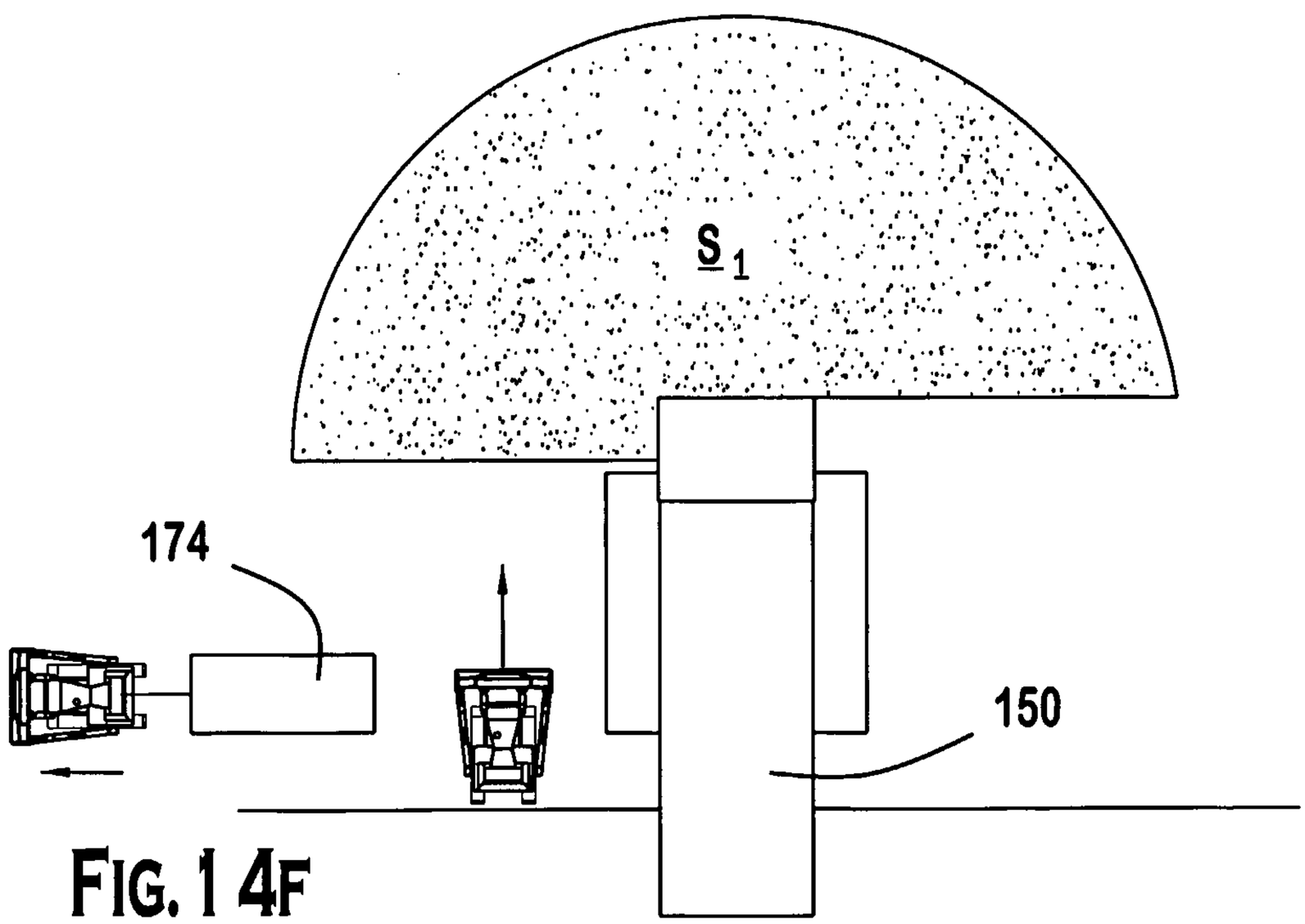

FIG. 14F

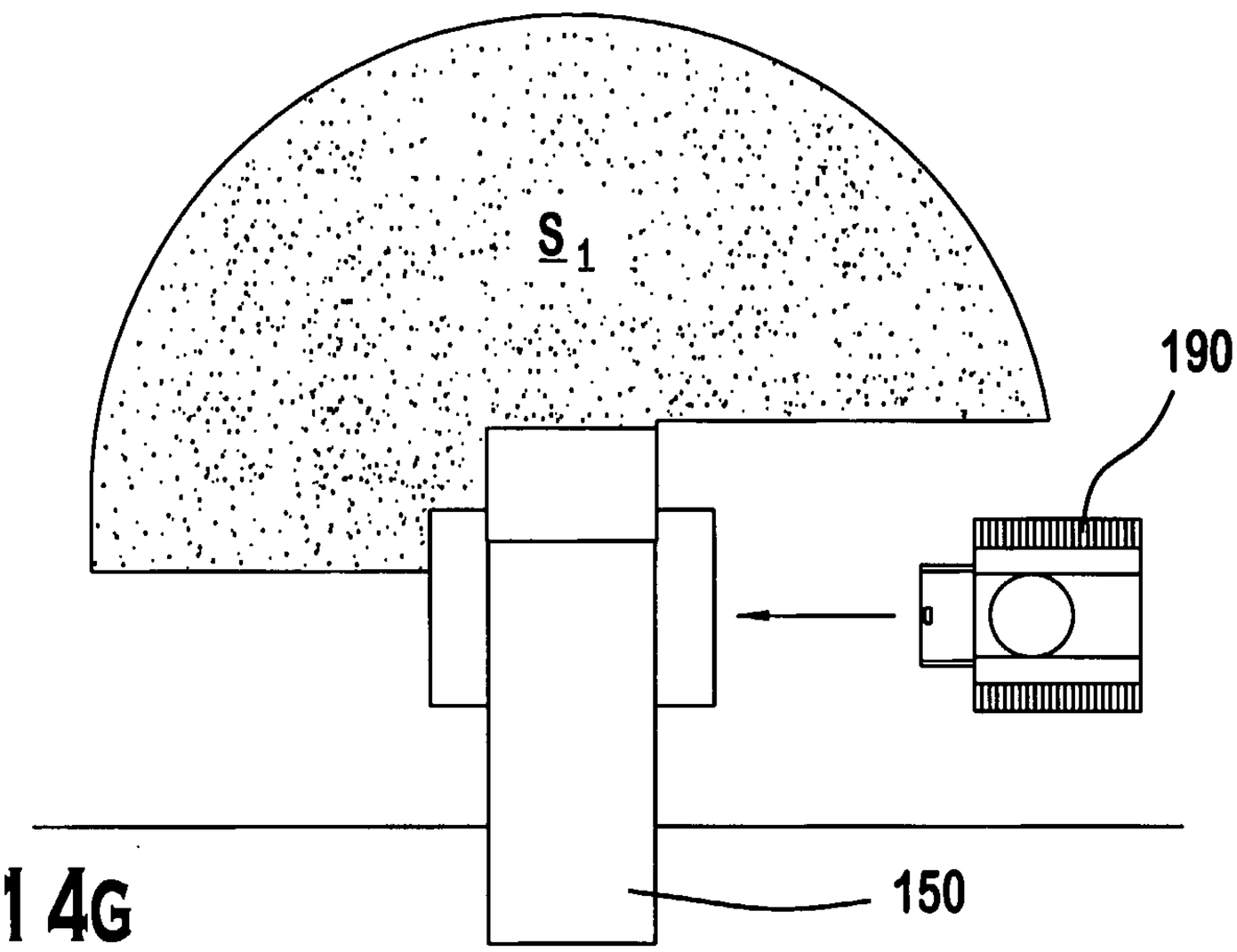

FIG. 14G

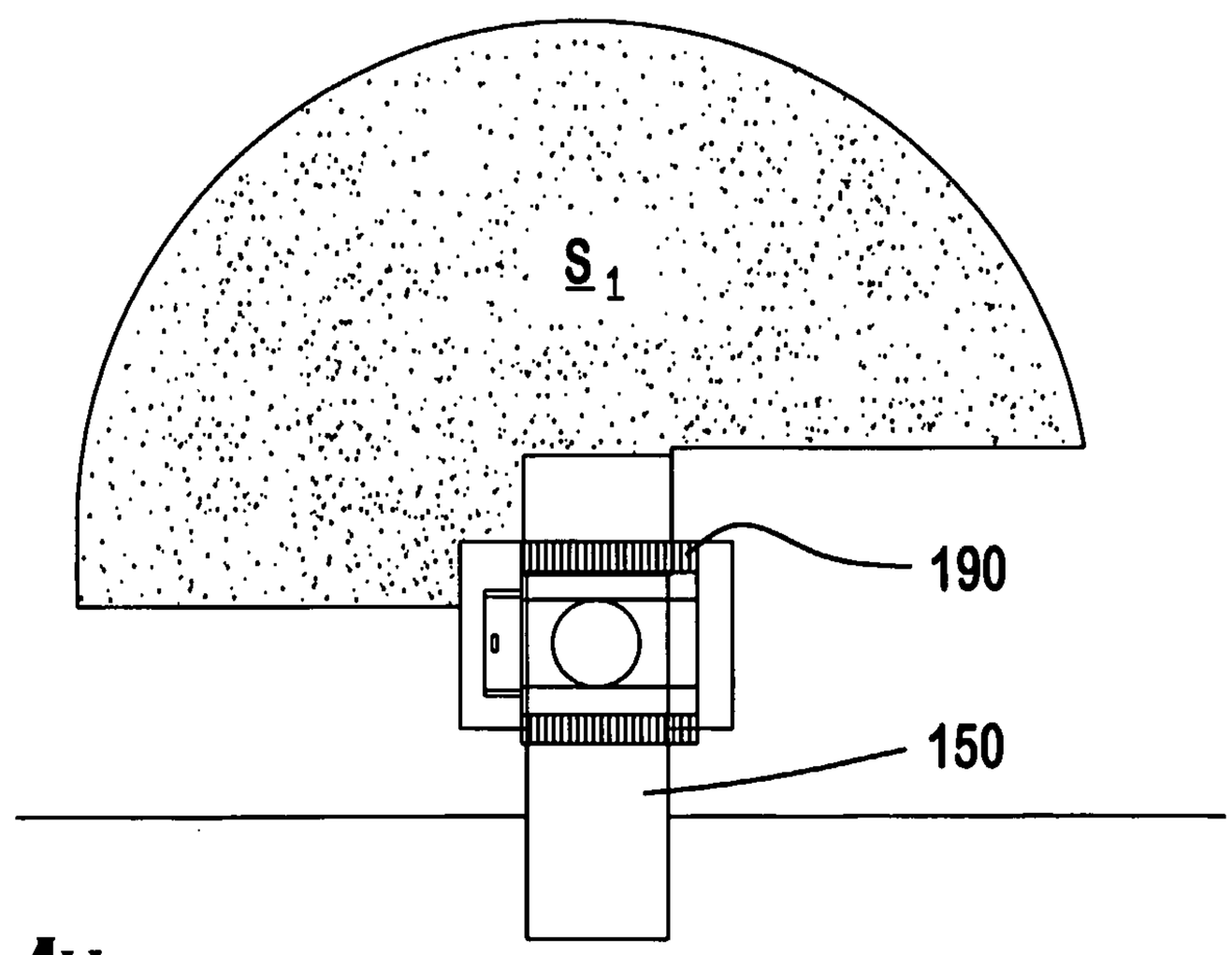

FIG. 14H

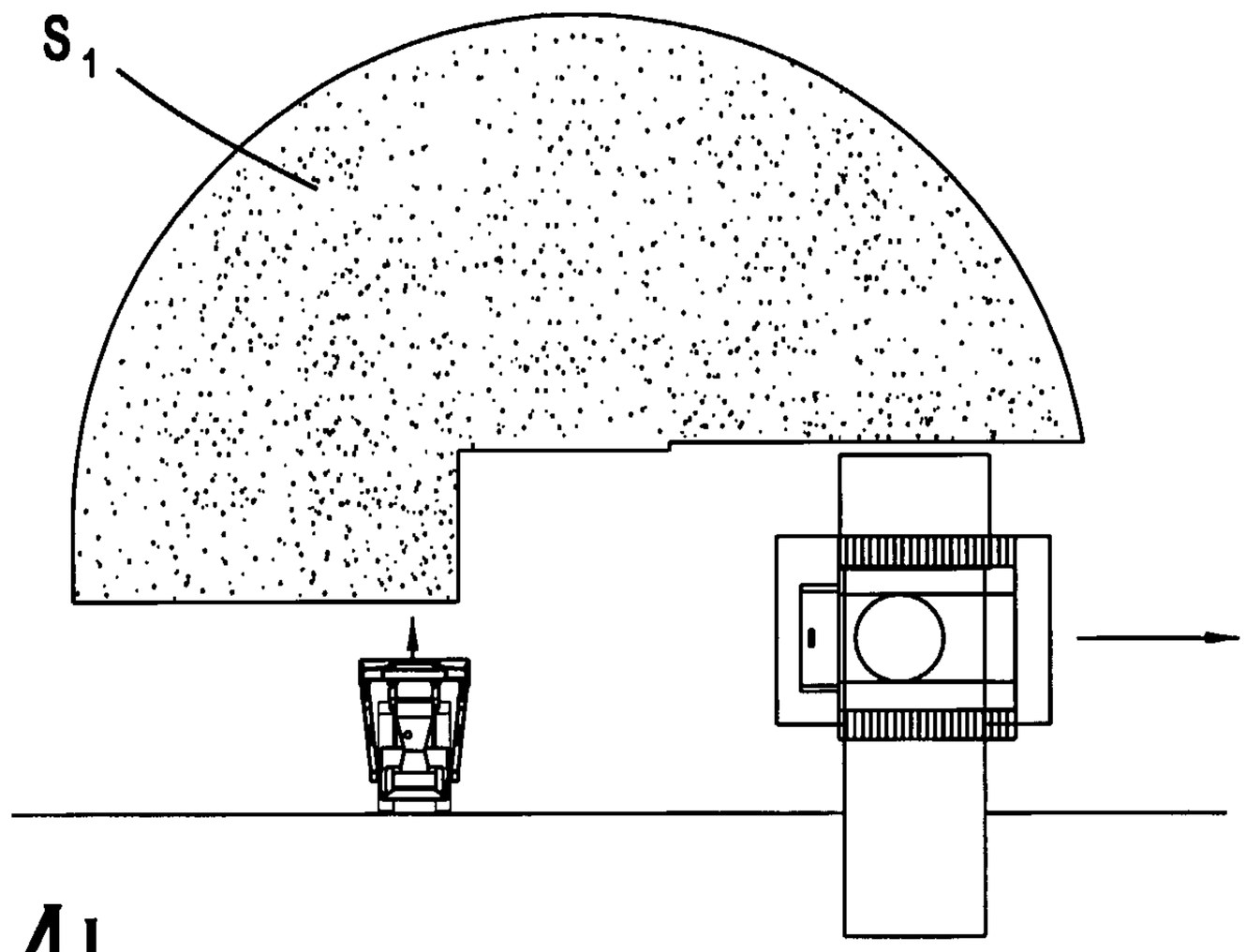

FIG. 14I

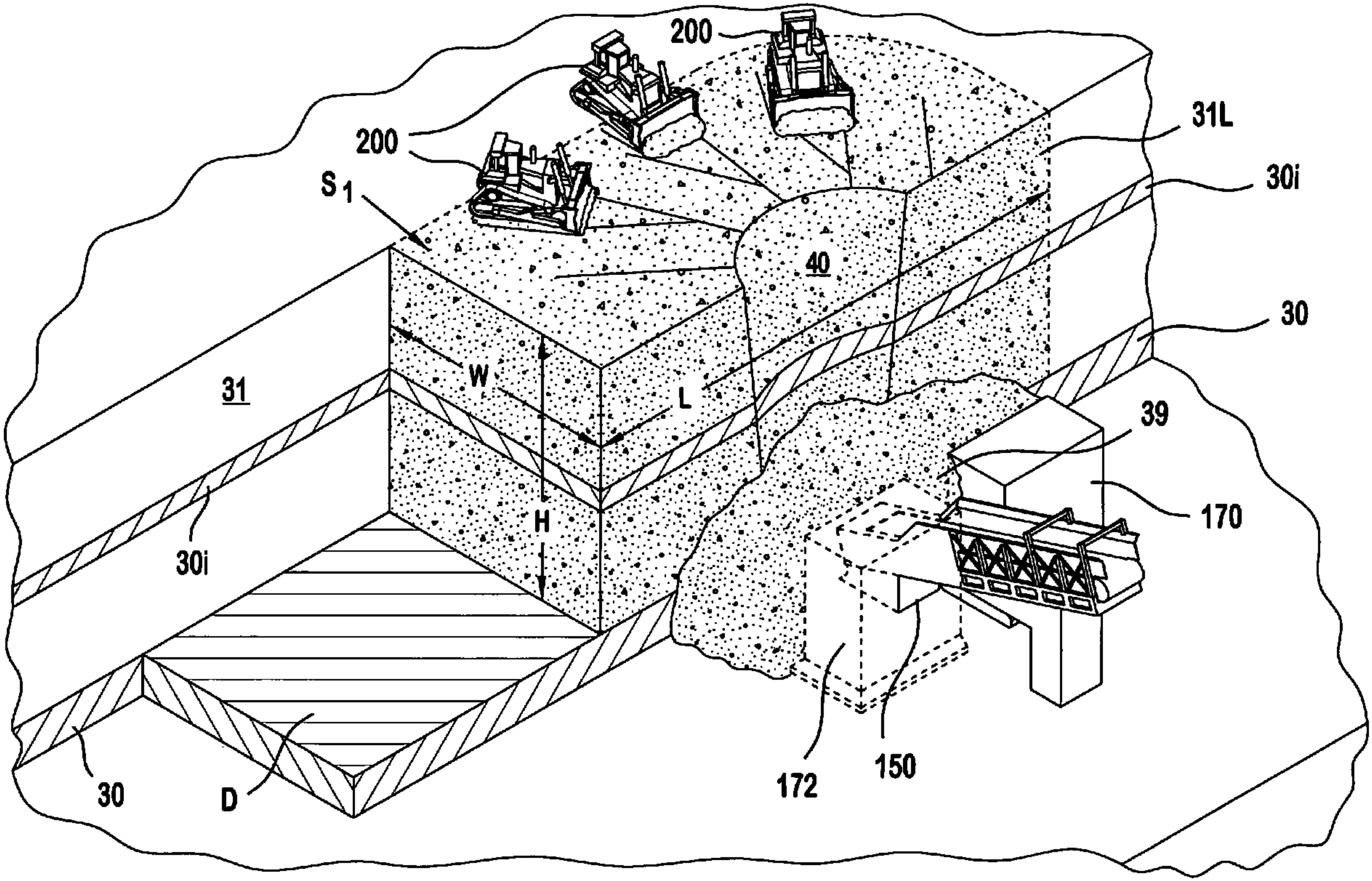
200
200
S 1
31L
30i
40
30
W
L
31
39
H
170
30i
30
D
172
150