No. 730,050. PATENTED JUNE 2, 1903.

L. SANDERS.

WAIST BELT.

APPLICATION FILED FEB. 27, 1903.

NO MODEL. 2 SHEETS—SHEET 1.

Fig. 1

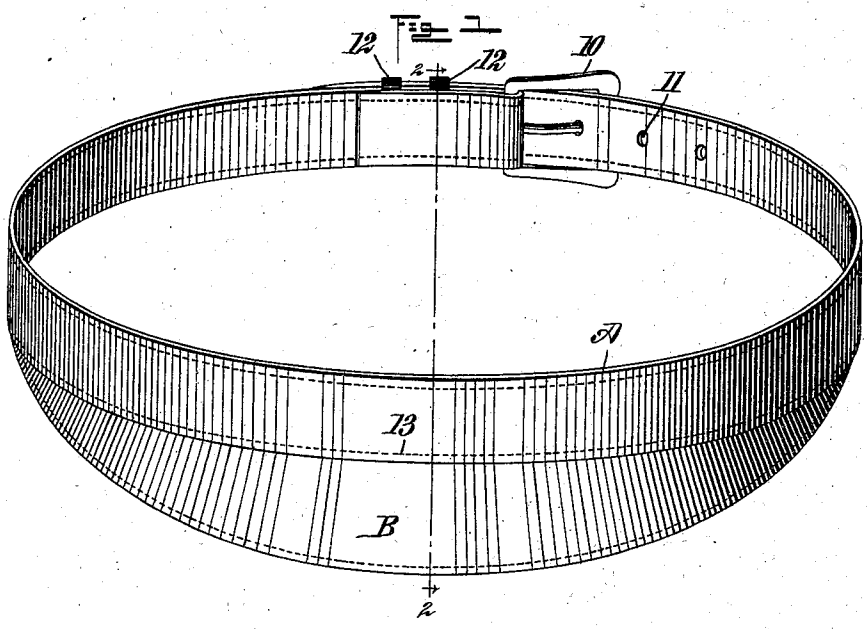

Fig. 2

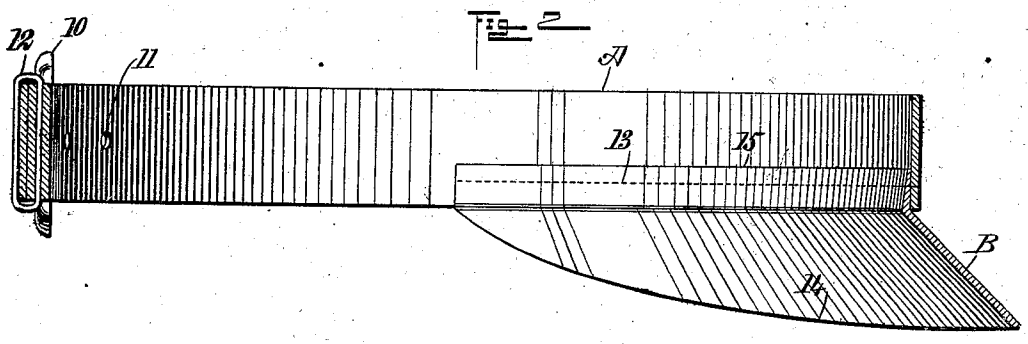

WITNESSES:

INVENTOR

Louis Sanders

BY

ATTORNEYS.

THE NORRIS PETERS CO., PHOTO-LITHO., WASHINGTON, D. C.

No. 730,050. PATENTED JUNE 2, 1903.

L. SANDERS.

WAIST BELT.

APPLICATION FILED FEB. 27, 1903.

NO MODEL. 2 SHEETS—SHEET 2

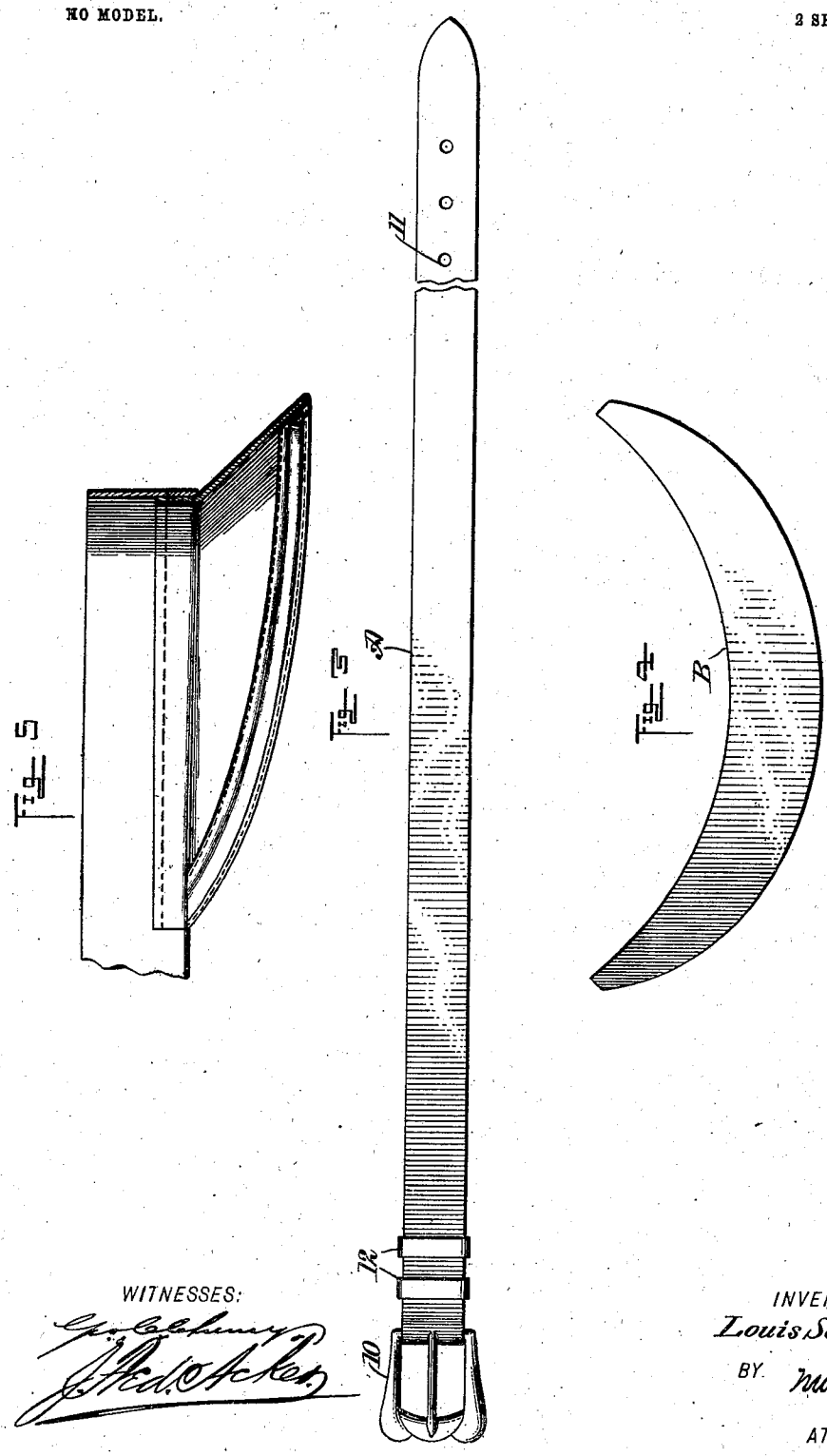

Fig. 5

Fig. 3

Fig. 4

WITNESSES:

INVENTOR
Louis Sanders
BY
ATTORNEYS.

THE NORRIS PETERS CO., PHOTO-LITHO., WASHINGTON, D. C.

No. 730,050. Patented June 2, 1903.

UNITED STATES PATENT OFFICE.

LOUIS SANDERS, OF NEW YORK, N. Y.

WAIST-BELT.

SPECIFICATION forming part of Letters Patent No. 730,050, dated June 2, 1903.

Application filed February 27, 1903. Serial No. 145,315. (No model.)

To all whom it may concern:

Be it known that I, LOUIS SANDERS, a citizen of the United States, and a resident of the city of New York, borough of Manhattan, in the county of New York and State of New York, have invented a new and Improved Waist-Belt, of which the following is a full, clear, and exact description.

My invention relates to waist-belts especially adapted for the use of women and children; and the purpose of the invention is to construct a belt which will fit neatly to the waist and to provide the rear of the belt with a downwardly-extending outwardly-flaring screen or skirt member at the back adapted to fit snugly to the rear of the person just below the waist-line and serve not only to add to the graceful appearance of the belt at the back, but also to cover and conceal any space that may occur between the waist and skirt by reason of the dress-skirt sagging at the waist-line and separating from the shirt-waist or dress-waist, which action frequently occurs and causes an unseemly opening between the two articles of apparel.

The invention consists in the novel construction and combination of the several parts, as will be hereinafter fully set forth, and pointed out in the claims.

Reference is to be had to the accompanying drawings, forming a part of this specification, in which similar characters of reference indicate corresponding parts in all the figures.

Figure 1 is a perspective view of the improved belt viewed from the rear. Fig. 2 is a central vertical section taken practically on the line 2 2 of Fig. 1. Fig. 3 is a plan view of the girdle or body portion of the belt. Fig. 4 is a plan view of the screen or skirt member detached, and Fig. 5 shows a special construction of skirt-section for use when the belt is made of fabric.

A represents the body or girdle member of the belt, adapted to encircle the waist of the wearer in the usual manner, being provided with means for adjustably connecting its ends, the means illustrated consisting of a buckle 10, attached to one end of the body, the other end of the girdle or body being provided with eyelets 11 to receive the tongue of the buckle, and the buckle end of the girdle or body has the usual keeper or keepers 12 applied for receiving the terminal of the girdle or body, which may pass beyond the buckle; but it will be understood that the character of the fastening device employed may be such as fancy may dictate.

The main feature of the invention relates to the application of a screen or skirt member B at the rear of the body or girdle member A. This screen or skirt is crescent-shaped, and while it may be formed integral with the body or girdle member A of the belt is preferably secured thereto by one or more lines of stitching 13 or by other suitable means.

The screen or skirt member B consists of a main section 14, which is outwardly and downwardly inclined or flared, extending outwardly and downwardly from the body or girdle member A when applied thereto, and an upper flanged section 15, which extends preferably wholly within the body or girdle member A, engaging with its inner face and secured in position by the aforesaid line or lines of stitching 13.

The screen or skirt member B is secured to the body member A at its central back portion and extends as far as may be desired an equal distance at each side of the back center of the girdle or body member A, and by reason of the crescent shape of the screen or skirt member B of the belt it tapers or slopes off toward its ends, where it joins the lower edge of the body or girdle member.

When a belt of the character described is worn, it effectually covers the dress at those points where the skirt is liable to leave or sag from the waist which may be worn and should such sagging occur will conceal it, whereas in the ordinary form of belt the drop of the dress-skirt from its set position at the back is plain to be seen. Furthermore, as the screen or skirt section fits to the contour of the person at the back below the waist-line and at a portion of the sides it tends to impart a trim and decorative aspect to the form at the back.

It will be noticed that the girdle member or body-section of the belt is cylindrical, that the belt presents at its front portion the appearance of an ordinary plain belt, and that

the skirt member or section is formed with the cylindrical portion 15 at its upper edge, which fits within and is secured to the rear portion of the belt, body, or girdle member, as shown in Fig. 2.

It should be understood that my improved belt is to be used outside of the skirt and waist, the purpose of the skirt portion being to cover any gap between the skirt and waist and to present a finished appearance at the back portion of the belt.

I desire it to be understood that when the belt is made of fabric the lower edge of the screen-section may be stiffened and held in shape by a properly shaped and inserted marginal reed, wire, or similar article, as shown in Fig. 5 of the drawings.

Having thus described my invention, I claim as new and desire to secure by Letters Patent—

1. A waist-belt consisting of a cylindrical girdle member and a screen or skirt member of crescent shape provided at its upper edge with a cylindrical portion secured within the lower portion of the girdle member at the back, the said screen or skirt member being gradually tapered or sloped toward its ends where it merges with the lower edge of the girdle member, as described.

2. A belt for use outside the waist and skirt, having a cylindrical body portion, a fastening for the ends of said body portion and provided at its rear side opposite the said fastening with an outwardly-flared skirt or screen depending from the cylindrical body portion, and tapering or sloping from its middle portion toward its ends, substantially as set forth.

3. A belt having a cylindrical body portion and presenting at its front side the appearance of a conventional belt and provided at its rear side with a depending outwardly-flared skirt portion tapered or sloped toward its opposite end and provided at its upper edge with a cylindrical portion fitting within and secured to the cylindrical body portion or belt, substantially as set forth.

In testimony whereof I have signed my name to this specification in the presence of two subscribing witnesses.

LOUIS SANDERS.

Witnesses:
JNO. M. RITTER,
F. W. HANAFORD.