T. A. & L. T. SMITH.

SHOE POLISHING DEVICE.

APPLICATION FILED OCT. 8, 1912.

1,068,827. Patented July 29, 1913.

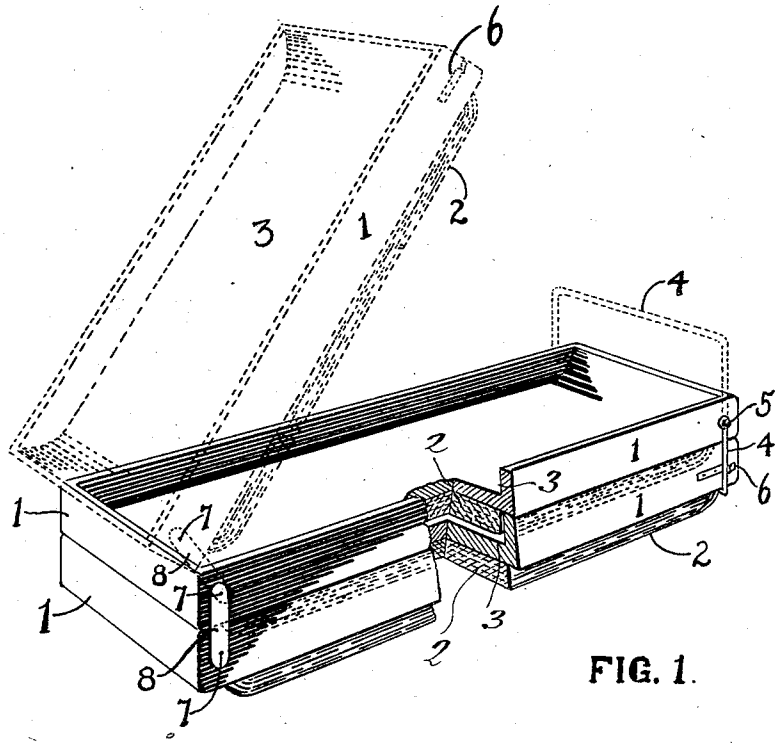

FIG. 1.

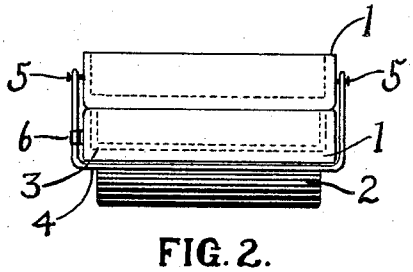

FIG. 2.

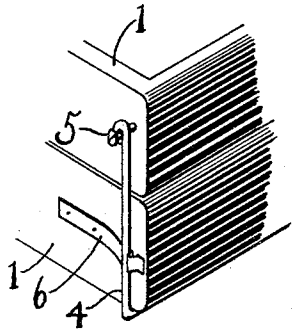

FIG. 3.

WITNESSES

J. A. Baismith

J. B. Cambers

INVENTORS

Theron A. Smith

Louis T. Smith

BY F. C. Bates

THEIR ATTORNEY

COLUMBIA PLANOGRAPH CO., WASHINGTON, D. C.

UNITED STATES PATENT OFFICE.

THERON A. SMITH AND LOUIS T. SMITH, OF SAN JOSE, CALIFORNIA.

SHOE-POLISHING DEVICE.

1,068,827. Specification of Letters Patent. **Patented July 29, 1913.**

Application filed October 8, 1912. Serial No. 724,536.

To all whom it may concern:

Be it known that we, THERON A. SMITH and LOUIS T. SMITH, citizens of the United States, residing at 353 South Fourth street, San Jose, in the county of Santa Clara and State of California, have invented a certain new and useful Improvement in Shoe-Polishing Devices, of which the following is a specification.

Our invention comprises an improvement in shoe-polishing devices, and the objects of our invention are, first, to provide means for polishing either a tan or black leather shoe without discoloration from one to the other; second, to provide a durable and economical shoe-polishing device.

We attain these objects by the mechanism illustrated in the accompanying drawings, in which—

Figure 1 is a perspective view of our device nested, ready for use. Fig. 2 is an end elevation showing the wire fastening in place, and the end of the polishing pad. Fig. 3 is a perspective view of a corner of our device nested, showing the wire fastening and spring catch in place.

Similar numerals refer to similar parts throughout the several views.

The two main body portions 1, are composed of wood or any other suitable material, each having a polishing pad 2 attached to the under side thereof, and a concavity in the upper side thereof shown at 3, to receive the polishing pad 2 of the other body portion 1. When one of the polishing pads is in use the other polishing pad is lying in the concavity 3, of the body portion of the one in use. Said body portions 1, are held in place by wire fastening 4. This wire fastening 4 is connected to the upper body portion 1 by screws shown at 5, and is bent at right-angles to clasp and hold the two body portions together in either direction, and is held in place by spring catch 6. The body portions 1 are reversed by releasing wire fastening 4, from spring catch 6, and revolve on pivots 7, and flat metallic plates 8, one on each side of the body portions 1, these plates being made of flat metal of the proper length, width, and thickness, and having rounded ends. The polishing pads 2, may be made of any suitable material, preferably felt or sheep-skin of the proper length, width, and thickness.

Having fully described our invention, what we claim as new, and desire to secure by Letters Patent, is—

In a shoe-polishing device, the combination of two body portions, each having a concavity in its upper side and a polishing pad attached to its under side; means for permitting the rotation of said body portions so as to bring the polishing pad of one within the concavity of the other, and vice versa; and means for fastening said body portions together, substantially as shown and described.

In testimony whereof we have signed our names to this specification in the presence of two subscribing witnesses.

THERON A. SMITH.
LOUIS T. SMITH.

Witnesses:
J. B. CAMBERS,
H. J. B. WRIGHT.

Copies of this patent may be obtained for five cents each, by addressing the "Commissioner of Patents, Washington, D. C."