No. 870,777. PATENTED NOV. 12, 1907.

F. W. HARKINS.

FIRE ESCAPE.

APPLICATION FILED AUG. 6, 1902.

Fig. 1

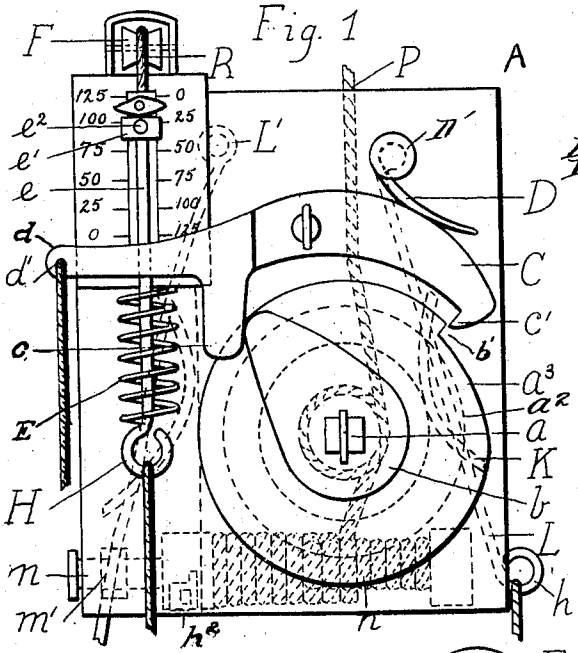

Fig. 3.

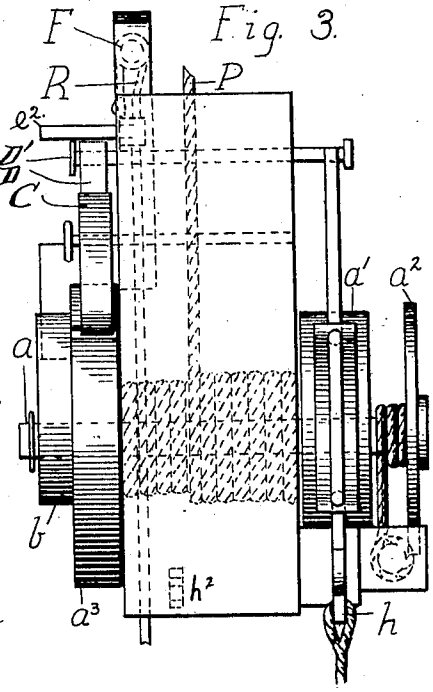

Fig. 2.

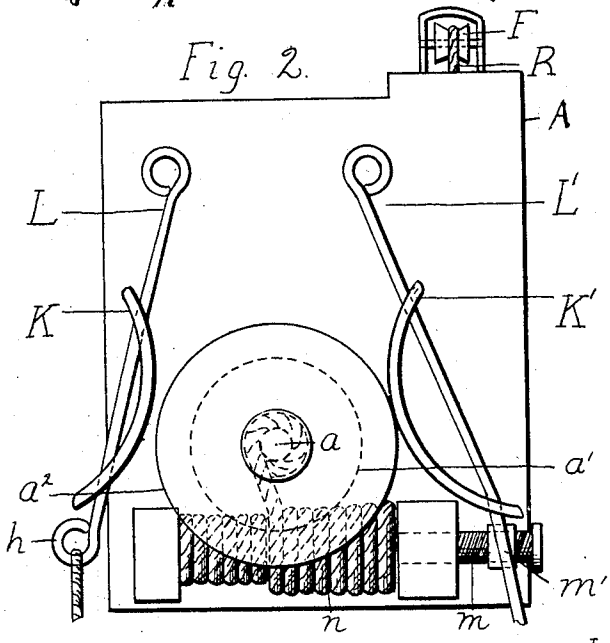

Fig. 4.

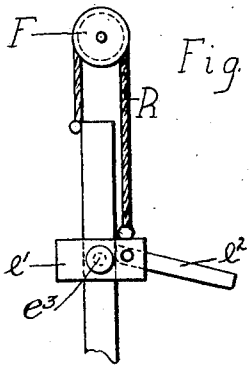

Witnesses:

Theodora Smith

Philip Moran

Inventor:

Francis W. Harkins

THE NORRIS PETERS CO., WASHINGTON, D. C.

UNITED STATES PATENT OFFICE.

FRANCIS W. HARKINS, OF CHICAGO, ILLINOIS.

FIRE-ESCAPE.

No. 870,777. Specification of Letters Patent. Patented Nov. 12, 1907.

Application filed August 6, 1902. Serial No. 118,634.

To all whom it may concern:

Be it known that I, FRANCIS W. HARKINS, a citizen of the United States, residing at Chicago, in the county of Cook and State of Illinois, have invented a new and useful Machine or Fire-Escape, of which the following is a specification.

My invention relates to improvements in fire-escapes that employ a descending rope unwinding from a barrel, windlass or axle, and the object of my invention is to provide an automatic device of this kind. I attain this object by the mechanism illustrated in the accompanying drawing in which

Figure 1 is a left side view, Fig. 2 a right side view and Fig. 3 a rear view of my device, while Fig. 4 is a side view showing the striker or means of releasing the axle, being a detail of Fig. 1.

Similar figures refer to similar parts throughout the several views.

The body of the machine A is a box framed of wood or any suitable material, within which is an axle *a* having its bearings in the sides of the box A. The axle *a* has its ends prolonged beyond the sides of the box to serve as supports for the friction wheel a' and wheel a^2 on one side of frame A, the wheel a^3 and the cam *b* on the other side of frame A. The rope or wire P is wound around the axle *a* from which it unwinds by the descending of a weight attached to the frame or to the rope. A catch C is so made as to arrest wheel a^3 at each revolution, being forced by the cam *b* striking the projection *c* until the hook C' of catch C engages notch b' of wheel a^3. Cam *b* and wheel a^3 are so made that cam *b* passes beyond the projection *c* of catch C just before notch b' is caught by the catch C. A small spring D acts to hold the catch in place against any light jar. Catch C is made segmentary and hook C' radial so that its disengagement with notch b' may have as little friction as possible.

d is a prolongation or handle of the catch C and d' a small hole for a ring or cord, by which catch C may be pulled and thrown off wheel A^3 by hand should spring E fail to work.

E is a spring or spring balance fastened at its upper end at one side of frame A just back of handle *d* of catch C.

In the drawing hook H is shown as having been formed by turning up the lower end of rod *e* while rod *e* is attached to spring E at its lower end. But instead of the usual pointer of the spring balance, a movable striker e' is provided, which embraces and slides up and down the index rod *e* of the spring. This striker e' is shown in Fig. 4. Striker e' is a simple block perforated for the admission and passage of rod *e* and having attached to it by a pin a buffer e^2, which latter has one end beveled so as to clamp the rod *e* when properly affixed. After passing over the pulley F to change its direction, a cord or wire R connects this striker e' to the rod *e* so that the rod *e* when pulled down by the weight attached to the hook H of spring E, will always raise the striker e' to its proper place, when in operation, which is just above the handle *d* of the catch C.

The buffer e^2 of the striker e' is so pivoted that on being raised or struck up, by the upward action of handle *d* of catch C its beveled end will clamp the rod *e* firmly. When once set the cord or wire R being no longer useful may be unhooked at either end, or may be allowed to remain, it being made of material that will stretch sufficiently to allow this. Or wire R may be dispensed with and the striker e' moved or set to its proper place by hand. Thus by means of the device (Fig. 4.) automatic adjustment of the striker e' may be secured according to the weight of a person so that when in action the proper force necessary to satisfactory working of the cam C may always be obtained. When thus adjusted it may be set by means of a thumb screw—a result, of course, also readily secured by setting the buffer e^2 by hand, when wire R is not used.

Fastened at lower end of spring E which is attached to rod *e*, is a hook H for one end of a sling of any suitable kind by which the weight is attached. h^2 is another eye made to receive the end of the sling, if needed.

K, K' are friction springs borne by the arms L, L' arranged to rub against the wheel a'. Arms L, L' are hung or pivoted to the frame A. Arm L is provided with a hook or loop *h* for a rope or sling, the other end of which is fastened to the hook H. Arm L' is worked by a nut traveling over a threaded rod *m* which by the rotating of axle *a* is revolved by any ordinary mechanism, when connected therewith, such as gear wheels, worm and worm wheel or the cord and axle shown in Fig. 3. A weight attached to arm L causes considerable friction (varying with the weight) of spring K and friction wheel a' upon which it bears and acts as a brake when in action, but this action is supplemented by the spring K', also acting as a brake on the other side of the wheel a', which brake spring K' is actuated by the nut m' when traveling along the rod *m*. As arm L' is only useful with heavy persons or weights to reduce by friction the unusual momentum, I elect to dispense with it, when not needed.

The action of my device is obvious. When set, the catch C engaging with the notch b' keeps the axle *a* from revolving and the suspended weight from descending. On pulling down the catch handle *d*, and releasing thereby the notch b', the attached weight causes the axle *a* to revolve, allowing the weight to descend with the unwinding of the rope until the catch C is forced by the cam *b* again to engage with the notch b' of wheel a^3. This would stop the descent entirely, but

in stopping, the inertia of the falling body produces a jerk and draws down unusually the weighted spring E, which draws down rod e and striker e', the buffer of which, e^2, engages with the handle d of the catch C and knocks it down, thus freeing the catch C and wheel a^3. This action allows the axle to again revolve and the weight to descend as before.

Where an axle of considerable diameter is used or the weight is large, the shocks in stopping may be too great. I relieve this effect somewhat by suspending a part of the weight on the friction arm L by which means the weight of the body determines the amount of friction and modification of the shocks, but it may be necessary in some cases to have more friction which I secure in having another arm L′ which is actuated by the axle a winding up as it revolves a cord n which is wound around a barrel rigidly connected to the threaded rod m which bears a nut connected to the spring arm L. As cord n unwinds, rod m is revolved, the nut m' travels towards the wheel a' and presses the spring k' against the friction wheel a', thus modifying sensibly the jar of the device: wheel a^2 simply serves as a guard to retain the cord in place on the axle. My device is shown as descending with the descending weight, but it is evident that it may be used stationary or fixed to a wall and the weight only be allowed to descend, by simply running the rope through the bottom, I prefer a wire rope in most cases. Any kind of a seat or sling can be attached to the hooks of the device. I may dispense with cam b, and use a heavier spring D instead. The details of construction may be varied considerably without altering my invention substantially; therefore, I do not limit myself to the exact form, arrangement and combination shown.

What I claim as new and desire to secure by Letters Patent is—

1. A fire escape consisting of a frame that supports the other parts, of a catch pivoted to the frame and provided with a handle for manipulation, of an axle having bearings in the sides of the frame, designed to be used as a windlass, and having fixed to it a notched wheel adapted at each rotation to receive the catch and thereby to arrest the axle and hold it until released by the lowering of the handle of the catch, substantially as described.

2. A fire escape consisting of a frame that supports the other parts, of a spring provided with a striker and its buffer, of a catch pivoted to the frame and provided with a handle adapted to be struck and depressed by the buffer of the striker on the elongation downwards of the spring, of an axle having bearings in the sides of the frame, designed to be used as a windlass, and having fixed to it a notched wheel adapted at each rotation to receive the catch, and having fixed to it also a cam adapted at each rotation of the axle to secure the engagement of catch and notched wheel, substantially as described.

3. A fire escape consisting of a frame that supports the other parts, of a spring provided with striker and its buffer, of a catch pivoted to the frame and provided with a handle adapted to be struck and depressed by the buffer of the striker on the elongation downward of the spring, of an axle having bearings in the sides of the frame, designed to be used as a windlass and having fixed to it a notched wheel adapted at each rotation to receive the catch, of a spring guard adapted at each rotation of the axle to secure the engagement of catch and notched wheel, substantially as described.

4. In a fire escape a rope, an axle round which the rope is wound, a catch adapted to be forced into engagement with a notched wheel rigidly fixed to the axle and a spring provided with a striker adapted to release the catch and thus free the wheel, in combination with a notched wheel adapted to be engaged by the notch, and with striker, substantially as described.

5. In a fire escape a rope, an axle round which the rope is wound, a catch adapted to be forced into engagement with a notched wheel rigidly fixed to the axle and to thus stop the wheel, and a means of releasing the catch and thus freeing the wheel and its connected axle, in combination with a notched wheel adapted to be engaged by the catch, substantially as described.

6. In a fire escape a rope, a brake, an axle round which the rope is wound, a catch adapted to be forced into engagement with a notched wheel rigidly fixed to the axle and to thus stop the wheel, a friction wheel fixed also upon the axle, by whose friction with the brake, the shock of the arrest of axle is reduced, a spring provided with a striker adapted to release the catch and thus free the wheel, in combination with a notched wheel adapted to be engaged by the catch, and with striker, substantially as described.

7. A fire-escape consisting of a frame that supports the other parts, of a catch pivoted on the frame and provided with a handle for manipulation, of an axle having bearings in the sides of the frame, designed to be used as a windlass and having rigidly fixed to it a notched wheel adapted at each rotation to receive the catch, and of a spring guard whereby the certain engagement of catch and notch are secured, substantially as described.

8. In a fire-escape a rope, an axle round which the rope is wound, a catch adapted to be forced into engagement with a notched wheel rigidly fixed to the axle and to thus stop the wheel, and a spring provided with an adjustable striker borne on its index rod, adapted to release the catch and thus free the wheel, in combination with a notched wheel, adapted to be engaged by the catch and with striker, substantially as described.

FRANCIS W. HARKINS.

Witnesses:
THEODORE SMITH,
PHILIP MORAN.