Oct. 10, 1967 J. CORNELISSEN 3,346,122

PLATE SEPARATOR WITH DRAINAGE GUTTER

Filed Aug. 25, 1966 2 Sheets-Sheet 1

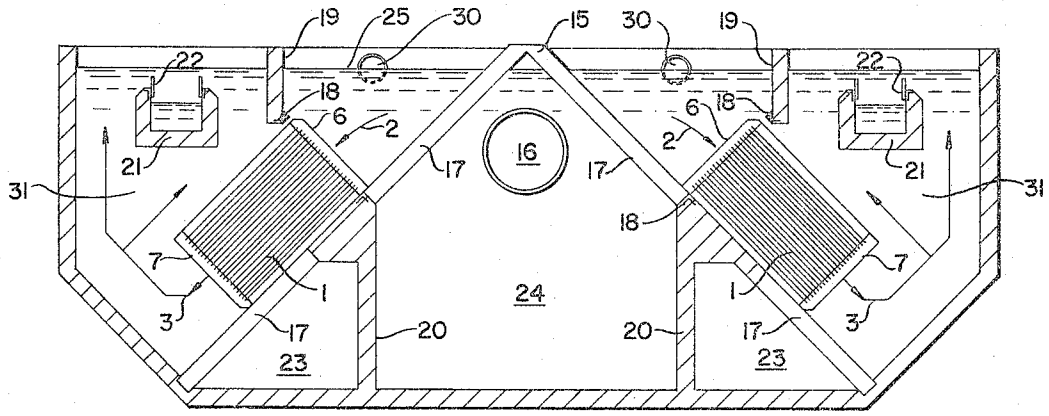

FIG. 1

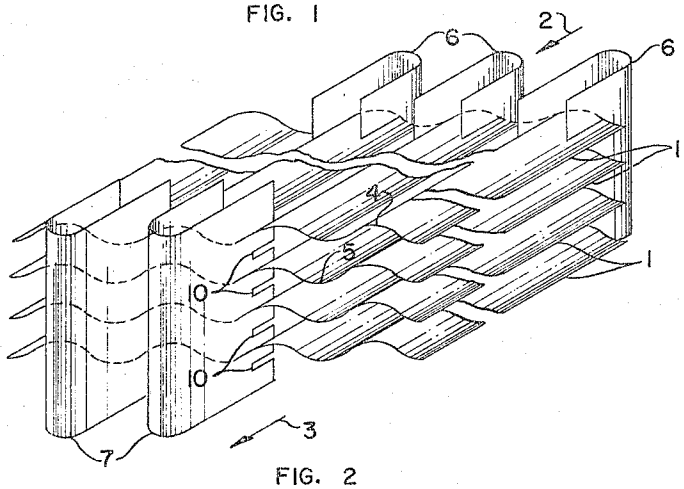

FIG. 2

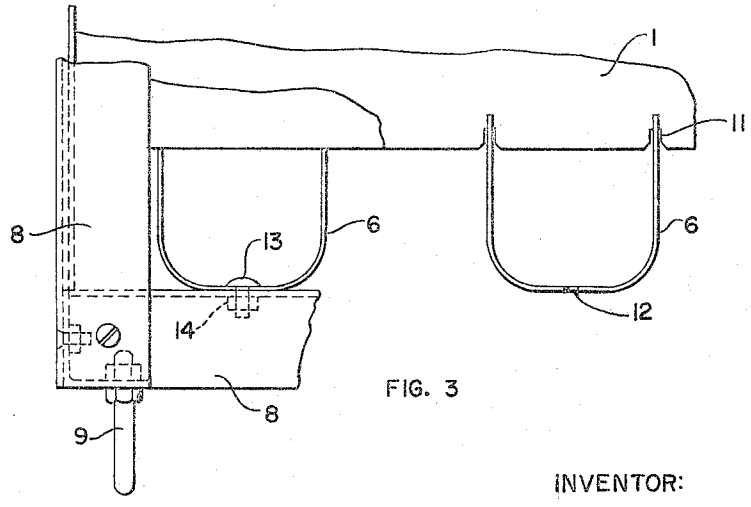

FIG. 3

INVENTOR:
JAN CORNELISSEN
BY: W. D. Marcontell
HIS ATTORNEY

Oct. 10, 1967 J. CORNELISSEN 3,346,122

PLATE SEPARATOR WITH DRAINAGE GUTTER

Filed Aug. 25, 1966 2 Sheets-Sheet 2

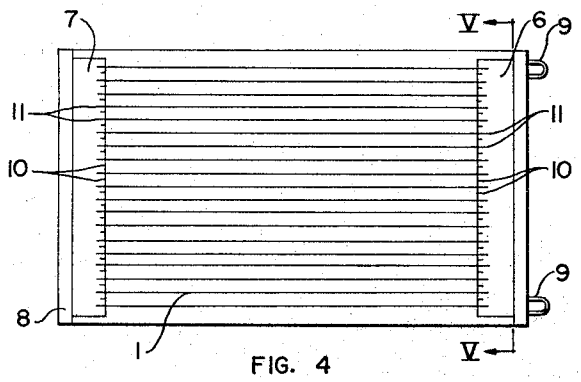

FIG. 4

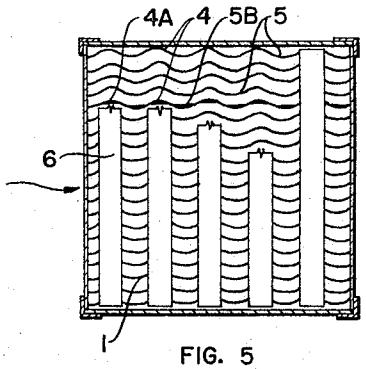

FIG. 5

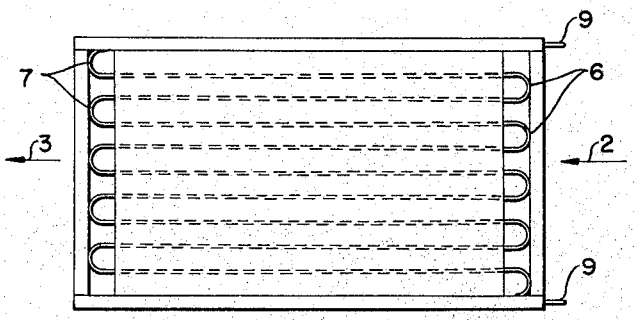

FIG. 6

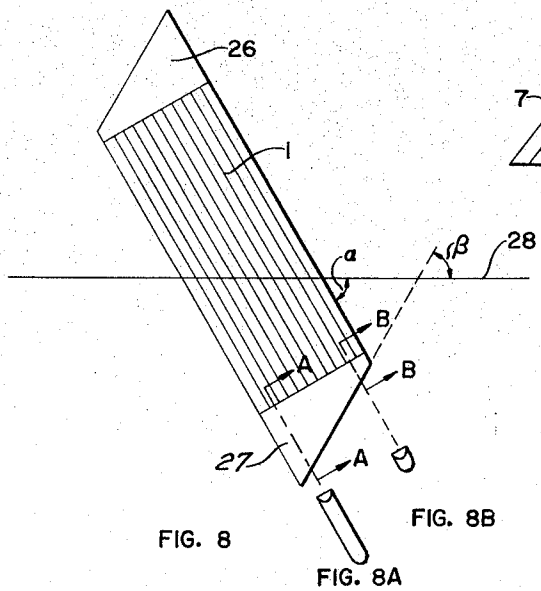

FIG. 8

FIG. 8A

FIG. 8B

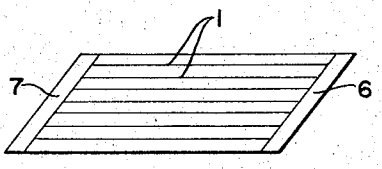

FIG. 7

INVENTOR:
JAN CORNELISSEN
BY: W. Marcontell
HIS ATTORNEY

United States Patent Office 3,346,122 Patented Oct. 10, 1967

3,346,122

PLATE SEPARATOR WITH DRAINAGE GUTTER

Jan Cornelissen, The Hague, Netherlands, assignor to Shell Oil Company, New York, N.Y., a corporation of Delaware

Filed Aug. 25, 1966, Ser. No. 575,115
5 Claims. (Cl. 210—522)

This invention relates to an apparatus for separating heterogeneously mixed substances from a carrier liquid such as water. More specifically, this invention relates to means for gathering and conducting away from the main flow stream impurities, such as solids and oil, that have been separated from a water flow stream by a plate separator.

Plate separators are devices used in a settling basin for the purpose of augmenting the gravity separation of materials that are heterogeneously mixed with a carrier liquid such as water. In theory, the contaminated water is caused to flow over a plurality of generally horizontally disposed plates which vertically divide the area of the basin in a direction transverse to the fluid flow into a number of shallow channels. If, for instance, the basin is subdivided into ten layers, the maximum path (rising or falling distance) which an impurity having a specific gravity different from that of the carrier liquid must travel before reaching a coalescing surface is reduced to $\frac{1}{10}$ of the depth of the basin. Substances having a specific gravity lower than that of the carrier liquid will rise to the top of a respective flow channel and substances having a specific gravity higher than that of the carrier liquid will sink. Consequently, in between each pair of plates lying above each other, two or three continuous layers of separate substances are obtained. At the top, e.g., against the bottom surface of the top plate, those substances having a specific gravity less than that of the carrier liquid will coalesce. At the bottom, e.g., against the top surface of the bottom plate, will coalesce those substances having a specific gravity greater than that of the carrier liquid. Between the two upper and lower layers will flow the main stream of the carrier liquid, for instance, water.

In order to expose the least surface area of the respective layers of separated impurities to the flow stream of the carrier liquid, thereby inhibiting a remixture of the respective substances with said carrier liquid, it has been proposed to corrugate the plates with the length of the corrugations extending parallel with the carrier fluid flow direction. Consequently, the separated impurities will coalesce in relatively deep channels in those portions of the corrugations most extreme from the carrier fluid flow center. Such results are contrasted to that of merely flat separating plates on which the impurities will coalesce in a relatively thin, equally distributed area, thereby exposing a greater percentage of the separated impurities to the carrier fluid interface where they will be subject to remixing.

The plate assembly is usually arranged to incline in such a way that the sediment, i.e., those impurities having a specific gravity greater than that of the carrier liquid, slide down the corrugated channels of the respective plates by gravity, ultimately finding their way to a settling basin on the lower end of the plate assembly. Conversely, the inclination of the plate assembly allows those substances having a specific gravity less than that of the carrier liquid, e.g., oil, to flow its way upstream of the carrier liquid, ultimately finding its way to the plate assembly flow stream entrance. There, the oil collects in a relatively thick layer above the surface of the incoming contaminated mixture, said surface being above the level of the highest flow channel through the plate assembly where it may be skimmed or drained away.

The greater part of these impurities will separate from the liquid flow in consequence of the fact that they are now present in the liquid in higher concentrations or because the fine particles have combined to form larger-sized particles with a sufficient settling rate. However, in view of the fact that much of the separated impurity must pass at the ends of the plate assembly in a flow stream transverse to that of the main flow stream of the carrier fluid it is possible for part of the separated substances to mix again with the liquid flowing in or from the plate assembly. This condition will be understood by considering the fact that the sediment falling from the lower or downstream end of the uppermost flow channel must pass through the exit flow stream of the carrier fluid from those channels disposed below said uppermost channel in order to reach the quiesecnt settling region below the exit end of the lowermost flow channel. In the case of substances that are lighter than the carrier fluid, the situation explained above is just the opposite.

It is an object of the present invention to provide an apparatus in which this remixing is substantially prevented.

This and other objects of this invention will be understood from the following description taken with reference to the drawings, wherein:

FIGURE 1 is a cross-sectional elevation of a settling tank having two inclined plate assemblies incorporating the present invention;

FIGURE 2 is a partial perspective view of the plate assembly;

FIGURE 3 is a detailed view showing the fastening of end gutters to a plate and to the frame;

FIGURE 4 is a side elevational view of the plate assembly;

FIGURE 5 is an end elevational view of the plate assembly;

FIGURE 6 is a plan view of the plate assembly;

FIGURE 7 is a diagrammatic view of a plate assembly having a parallelogram-shaped cross-section;

FIGURE 8 is a diagrammatic end elevation of a plate assembly having another embodiment of the end gutters; and

FIGURES 8A and 8B are sectional views of the end gutter illustrated in FIGURE 8 as seen across cut lines A—A and B—B, respectively.

With reference to FIGURE 1, there is shown a settling tank **15** having an inlet port **16** in the wall above a sandtrap compartment **24** which is separated from sludge basins **23** by partition walls **20**. Each of two plate assemblies as described below are mounted on supports **17** and **18**. The sandtrap compartment **24** is separated from the effluent discharge compartments **31** above the plate assemblies **1** by partition walls **19**. Each effluent discharge compartment **31** is provided with exit flow channels **21** which are fitted with adjustable rims **22**. The sandtrap compartment is also provided with oil layer discharge ports **30**.

The parallel plate assembly is shown in FIGURES 2, 4, 5 and 6, in which a number of corrugated plates **1** are spatially stacked in a direction normal to the major plane of said plates, each plate being parallel to the others, respectively. The tops **4** and valleys **5** in each of the plates extend in a direction perpendicular to the direction of flow of the liquid as shown in FIGURE 6 by arrows **2** and **3**. FIGURE 5 shows that the tops **4** and the valleys **5** of the various plates are respectively situated one above the other. Gutters **6** and **7** are arranged on the inlet and outlet sides, respectively, of the plate assembly. As shown in FIGURE 5, the main access of the gutters **6** lies in the vertical plane defined by the tops **4** of the various corrugated plates **1**, which tops are situated above each

other. Similarly, the main axis of the gutters **7** lies in the vertical plane defined by the valleys **5** of the corrugated plates **1**. The plate assembly is mounted on a frame **8**, which frame is provided with eyes **9** by means of which the plate assembly can be maneuvered. The numeral **10** designates notches arranged in the gutter-shaped strips. In FIGURE 4 the number of plates combined to form an assembly is about equal to half the number of pairs of notches available in each strip. The plates also are provided with notches **11**, which are illustrated by FIGURE 4 in that the overlapping of each of the plates **1** relative to the gutters **6** and **7** is equal to the sum of the two notches. This will be discussed in more detail below.

In operation, the water to be purified enters the settling tank **15** through the inlet opening **16** and is forced to flow through the plate assemblies **1** as a result of the arrangement of same relative to the partition walls **19** and **20**. During use, the settling tank is constantly filled with water. Insofar as the sediment, such as sand, and the like, in the inflowing water is coarse, it will settle out immediately and accumulate on the bottom of the standtrap compartment **24**.

In each of the plate assemblies the water is subsequently freed of finer impurities. As already pointed out, the substances with a specific gravity less than that of the carrier liquid will rise therein and as a result of the small rising height between the plate will soon find their way to the tops **4** of the corrugated plates **1**. By way of example, **4A** of FIGURE 5 designates a number of strips of such a substance, which, together, form a layer of separated substance between the relevant plates. The opposite phenomenon applies to the substances with a specific gravity higher than that of the carrier liquid. These heavier substances will settle out and collect as a layer **5B** in the valleys **5** of the corrugated plates **1**.

These impurities flow into the gutters, i.e., oil and similar impurities will rise and consequently find their way into the gutter **6** on the inlet side and the heavy impurities will flow to the gutter **7** on the outlet side. The effect of this is that the distinct flows of separated substances find their way into the gutters **6** and **7** and thus are kept outside the liquid flow which enters or leaves the plate assembly, respectively. This is essential for the separation of those substances which do not coalesce and are therefore liable to mix again with the carrier fluid.

The separated substances leave the gutters on the lower side of the plate assembly in the case of substances with a specific gravity higher than that of the carrier liquid and on the upper side of the plate assembly in the case of substances with a specific gravity lower than that of the carrier liquid. Preferably, the plate assembly is arranged in such a way that the gutters issue into a substantially stagnant liquid so that remixing of the separated substances with the carrier liquid is substantially prevented.

With specific reference to FIGURE 1, oil or the like leaves the gutter **6** on the upper side of the plate assembly at a point where the angle iron **18** is fitted in the partition wall **19**. There the water in the settling tank is almost stagnant so that the relevant impurities can freely rise to the surface of the water. In this way, a layer **25**, for example, oil, is formed on the water. By using conventional means such as discharge ports **30**, the layer of impurities or the oil can subsequently be removed at this point from the tank.

The heavier impurities slide down the inclined plate assembly to the gutter **7**, from where they find their way into the bottom portion of the sludge basin **23** through which the water does not flow at all. In this way silt particles, for example, with a size of about 10 microns, which have very low settling rates, can freely settle out. They are thus stored at the bottom of the sludge basin **23**, from where they can be removed by conventional means such as scrapers or suction hoses.

The purified water leaves the pipe assembly in the direction of arrow **3** and flows over the rim **22** into the overflow channel **21**, via which the water is carried off. Preferably, the overflow channel is provided with adjustable rims **22** such as will permit the control of the water level which is to be maintained in the settling tank.

It has been noted previously that the plate assembly is preferably arranged in an inclined position. The angle of inclination relative to the horizontal cannot be increased indefinitely since the active surface of the plates depends on the vertical projection hereof. This angle of inclination is determined primarily by the angle at which the separated substances with a specific gravity higher than that of the liquid slide down. In those cases in which sediment is separated, an angle of 45 degrees relative to the horizontal will mostly be sufficient. Such an angle of inclination has the advantage that the gutters are then likewise arranged at an angle of 45 degrees relative to the horizontal. Consequently, the sediment will slide equally well down through the gutters as through the plate assembly.

When a wider angle of inclination is desired, the plate assembly may be designed in such a manner as is illustrated by FIGURE 7 wherein the plates **1** are arranged at an angle to an imaginary horizontal, which angle is greater than 45 degrees. Since the cross-sectional area of the plate assembly in a vertical plane parallel to the direction of flow of the liquid has the form of a parallelogram, the angle formed by the gutters **6** and **7** relative to the said imaginary horizontal can be at least equal to the said angle. This embodiment has the advantage that the angle of inclination of the gutters relative to the horizontal can be so chosen that it is at least equal to the angle of inclination of the plate assembly relative to the horizontal.

The embodiment of the invention illustrated by FIGURE 8 utilizes gutters **26** and **27** that are formed in such a manner that the surface area defined by the gutters in a cross-section taken perpendicular to their main axis increases in the direction in which the separated substance will flow through the gutter. In this embodiment, the plate assembly is arranged at an angle α to the horizontal **28**. The walls of the gutters **26** and **27**, along which the separated substance will rise and fall, respectively, form an angle β relative to this horizontal. These angles are preferably so chosen that they are equal. The surface defined by the gutter gradually increases in the direction in which the separated substances will leave the gutter. This is illustrated by two cross-sectional FIGURES 8A and 8B. This construction has the advantage that the passage opening of the gutter is invariably adjusted to the quantity of material flowing through. In fact, in the case of sediment being separated from the liquid, the sediment will flow through the gutter from top to bottom. On the upper end of the gutter, only that quantity of sediment will pass therethrough as was separated between the uppermost pair of plates. On the lower end of the gutter the quantity of sediment which passes therethrough is equal to the sum of the quantity separated between all the pairs of plates.

This embodiment can also be used with advantage in case the angle of inclination of the plate assembly relative to the horizontal must be chosen greater than 45 degrees. In this case it is possible to make the angle of inclination to the horizontal at least equal to that of the plate assembly.

In order to obtain a solid construction of flexible design, the gutters and the plates are preferably provided with notches in such a way that the plates, on being assembled, can be slipped into the notches arranged in the gutters. This arrangement is shown in FIGURE 3 wherein the notches in the gutter-shaped strip **6** are slipped over the corrugated plate at a point where the notches **11** are located in the corrugated plate **1**. In this arrangement the material of the corrugated plate overlaps the material of the gutter. Since the gutters are substantially U-shaped,

thereby offering a greater resistance to flexing and buckling, a very strong connection is obtained. This construction allows the plates of the plate assembly to be rapidly varied in a simple manner by removing or adding plates as desired.

I claim as my invention:

1. An apparatus for separating the composite components of a heterogeneous mixture of substances, one of said substances being a carrier liquid, on the basis of specific gravity differential, said apparatus comprising:

a conduit for flowing said mixture; and

a plate assembly disposed within said conduit, said plate assembly comprising:

a plurality of corrugated plates, a major plane of each plate being substantially parallel to the major plane of the remainder of said plates and separated from the other plates in a direction normal to said parallel planes, the top and valleys of the corrugations being in substantial alignment in the normal direction and with the axis of said corrugations extending substantially parallel with the mixture flow direction; and

gutter means constituting flow channel means having a flow direction normal to said mixture flow interconnecting normally adjacent corrugations on at least one end of said plates, said flow channel means increasing in cross-sectional area in the direction of said channel flow, said gutter means comprising U-shaped channel members, the edge of the walls of said channel members opposite the bight portion thereof being secured to said one end of said plate assembly.

2. The apparatus of claim 1 wherein a vertical cross-section of said plate assembly in a plane parallel to the direction of flow of said mixture has the form of a parallelogram.

3. The apparatus of claim 1 wherein said channel member walls are provided with notches whereby said channel members are connected to said plates.

4. The apparatus of claim 3 wherein said plates are also provided with notches for receiving a corresponding notch in said channel members.

5. The apparatus of claim 1 wherein gutter means on the upstream end of said plate assembly with respect to said mixture flow direction communicates with the normally aligned tops of said corrugations and gutter means on the downstream end of said plate assembly communicates with the normally aligned valleys.

References Cited

UNITED STATES PATENTS

1,190,863	7/1916	Corne et al.	210—521 X
1,864,511	6/1932	Jones	210—83 X

FOREIGN PATENTS

95,080	11/1959	Norway.

REUBEN FRIEDMAN, *Primary Examiner.*

J. DE CESARE, *Assistant Examiner.*